cnc cabinetry®

2026

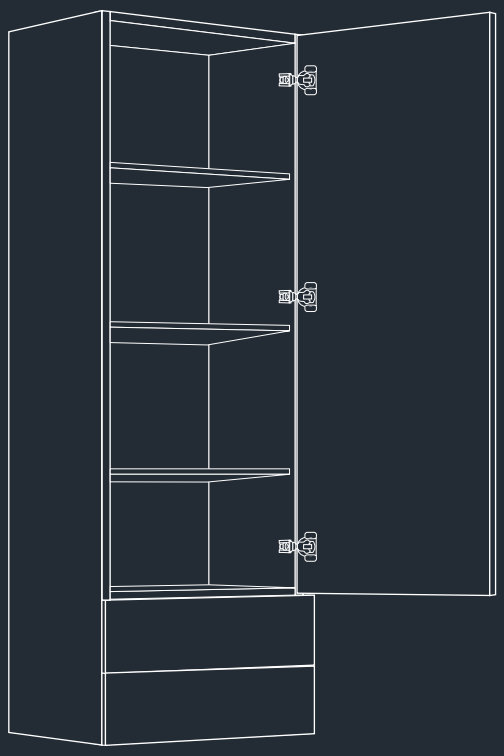

Product Spec Book

America's Best Value In Cabinetry®

Dear CNC Value Partner,

CNC was founded on the idea of making kitchen cabinets more accessible to all, by offering the ultimate value in design, quality and price.

For over three decades now, we at CNC have been providing kitchen and bath dealers and the customers they serve throughout the United States with the ultimate value in kitchen cabinets countertops, and bathroom vanities. Rather than tossing about meaningless boardroom phrases, we set out to define just what exactly value means.

For us, value means ordering high-quality products at affordable prices. Value means being able to offer a vast, ever-expanding selection of progressively designed door styles. Value means providing lightning-quick turnaround times. Value means giving someone the ability to talk to a real person who understands your needs.

Our motto, "America's Best Value in Cabinetry", reflects our commitment to you, our customer. We provide this value nationally through our many locations across the country. This strategy not only ensures efficiency in delivery but also emphasizes our nationwide accessibility.

This is the core of CNC - a company built on providing our customers with the ultimate value in design, quality, and service. Our cabinets create a comfortable and personalized living space, transforming your house into a home. Please peruse the accompanying material to get to know us, and how we can service you.

Thank you for choosing CNC Cabinetry.



Nathan Indig

CEO, CNC Cabinetry

New Additions

Price Codes:

*Please note following updated price codes

Luxor	Bedford	Concord	Classic	Alvic	Vanguard
L / T / Z	R / S	A/B/C/D/M/N/O/P	E/F/G/H/I	J / K	V

New Door Styles

BEDFORD
BY CNC CABINETRY

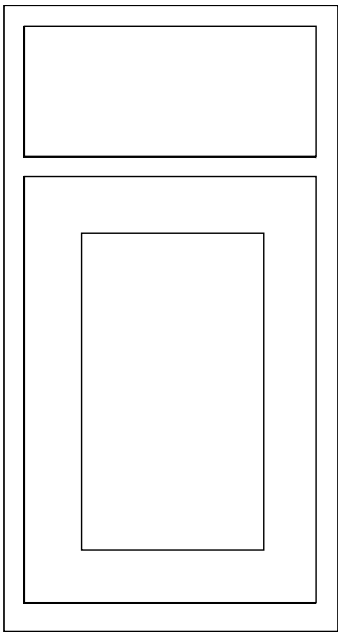

Dover

Door Style: Shaker
Overlay: Standard Overlay
Price Code: S

LUXOR
BY CNC CABINETRY

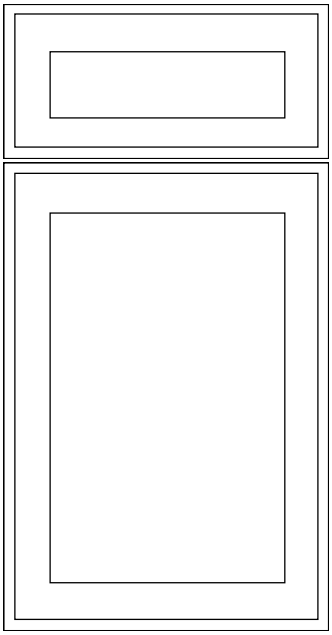

Glencove

Door Style: Shaker
Overlay: Full Overlay
Price Code: T

Classic
BY CNC CABINETRY

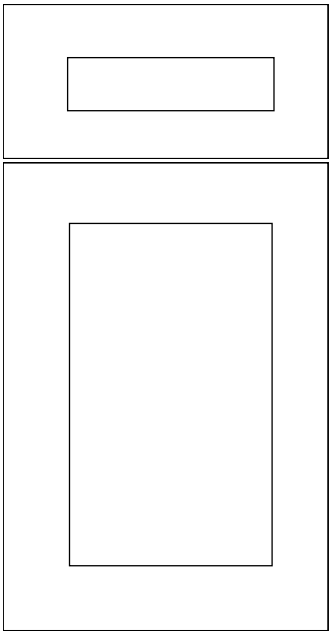

Woodbourne

Door Style: Shaker
Overlay: Frameless
Price Code: G, H, I
* Available with extended lead time

Upgrades

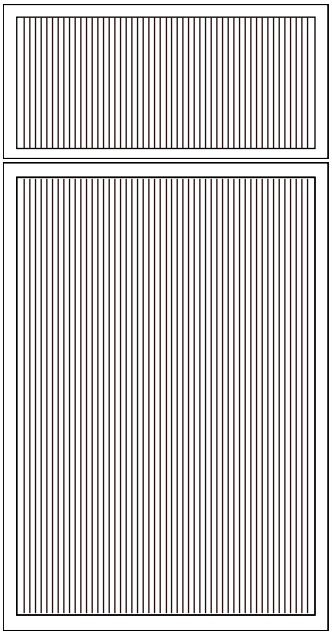

Reeded Panel

Door/Drawer Insert

Available as an upgrade in Newport & Versailles

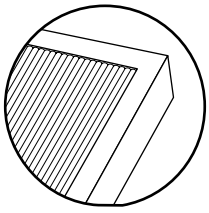

New Finishes:

Color Name	Finish	Collection(s)
07 - Saddle	Stain	Bedford (Dover), Luxor (Glencove)
202 - Wheat	Stain	Concord (Sydney, Newport), Classic (Versailles, Woodbourne)

New Display Items:

Item	SKU
Full set of 6x6 color chips	DISP-CB6-SET
Full set of Alvic Luxe samples	DISP-ALL-CB3x5
Full set of Alvic Syncron samples	DISP-ALS-CB3x5
Full set of Alvic Zenit samples	DISP-ALZ-CB3x5
Display Center	DISP-CENTER-CON-LUX
Display Center	DISP-CENTER-MIX
Display Center	DISP-CENTER-CLS
Bedford Collection Catalog	DISP-BEDCAT
Luxor Collection Catalog	DISP-LUXCAT
Concord Collection Catalog	DISP-CONCAT
Classic Collection Catalog	DISP-CLASCAT
Vibe Brochure	DISP-VIBEB
Wire Rack Door Display	DISP-RACK

Plus Program

Color Name	Finish	Collection(s)
101 - Sleek White*	Paint	Concord, Classic
102 - Linen*	Paint	Concord, Classic
103 - Sahara*	Paint	Concord, Classic
104 - Mountain Stream*	Paint	Concord, Classic
105 - Adirondack Blue*	Paint	Concord, Classic
106 - Sage*	Paint	Concord, Classic
107 - Evergreen*	Paint	Concord, Classic
108 - Rumors*	Paint	Concord, Classic
109- Cracked Pepper*	Paint	Concord, Classic
110 - Jet Black*	Paint	Concord, Classic
200 - Ale	Stain	Concord (Sydney, Newport), Classic (Versailles, Woodbourne)
201 - Bourbon	Stain	Concord (Sydney, Newport), Classic (Versailles, Woodbourne)
202 - Wheat	Stain	Concord (Sydney, Newport), Classic (Versailles, Woodbourne)

***Finishes not available in the Park Ave, Milano or Broadway doors.**

New Items

Item	SKU	Collection(s)
Wall Countertop Cabinet	CT1848	Concord, Classic
Wall Countertop Cabinet	CT1854	Concord, Classic
Wall Countertop Cabinet	CT1860	Concord, Classic
4-Drawer Base Cabinet	DB12-4	Concord, Classic
4-Drawer Base Cabinet	DB15-4	Concord, Classic
4-Drawer Base Cabinet	DB18-4	Concord, Classic
4-Drawer Base Cabinet	DB21-4	Concord, Classic
4-Drawer Base Cabinet	DB24-4	Concord, Classic
Wall Cabinet	2715	Concord, Classic
Wall Cabinet	2718	Concord, Classic
Square Corner Wall Cabinet	WSQ2415	Concord, Classic
Square Corner Wall Cabinet	WSQ2418	Concord, Classic
Wall Open Cabinet	WOC1830	Concord, Classic
Wall Open Cabinet	WOC1836	Concord, Classic
Wall Open Cabinet	WOC1842	Concord, Classic
Wall Open Cabinet	WOC3030	Concord, Classic
Wall Open Cabinet	WOC3036	Concord, Classic
Wall Open Cabinet	WOC3042	Concord, Classic
Bookcase Cabinet	BCC1854	Concord, Classic
Bookcase Cabinet	BCC1860	Concord, Classic
Bookcase Cabinet	BCC3054	Concord, Classic
Bookcase Cabinet	BCC3060	Concord, Classic
Light Rail Molding 2	LTRM2	Luxor, Concord, Classic
Light Rail Molding 3	LTRM3	Luxor, Concord, Classic
Modern Wood Hood	WHM30	Concord, Classic
Modern Wood Hood	WHM36	Concord, Classic
Base Cabinet With A Single Df	B30-SDF	Concord, Classic
Base Cabinet With A Single Df	B30-SDF-POS1	Concord, Classic
Base Cabinet With A Single Df	B30-SDF-POS2	Concord, Classic
Base Cabinet With A Single Df	B33-SDF	Concord, Classic
Base Cabinet With A Single Df	B33-SDF-POS1	Concord, Classic
Base Cabinet With A Single Df	B33-SDF-POS2	Concord, Classic
Base Cabinet With A Single Df	B36-SDF	Concord, Classic
Base Cabinet With A Single Df	B36-SDF-POS1	Concord, Classic
Base Cabinet With A Single Df	B36-SDF-POS2	Concord, Classic
Sink Base Cabinet With A Single Df	SB30-SDF	Concord, Classic
Pocket Door	PD3648	Classic (Broadway & Milano)
Pocket Door	PD3654	Classic (Broadway & Milano)
Pocket Door	PD3660	Classic (Broadway & Milano)
Pocket Door	PDB3648L	Classic (Broadway & Milano)
Pocket Door	PDB3648R	Classic (Broadway & Milano)
Pocket Door	PDB3654L	Classic (Broadway & Milano)
Pocket Door	PDB3654R	Classic (Broadway & Milano)
Pocket Door	PDB3660L	Classic (Broadway & Milano)
Pocket Door	PDB3660R	Classic (Broadway & Milano)

Item	SKU	Collection(s)
Sink Base Cabinet With A Single Df	SB30-SDF-HR	Concord, Classic
Sink Base Cabinet With A Single Df	SB30-SDF-TOT	Concord, Classic
Sink Base Cabinet With A Single Df	SB33-SDF	Concord, Classic
Sink Base Cabinet With A Single Df	SB33-SDF-HR	Concord, Classic
Sink Base Cabinet With A Single Df	SB33-SDF-TOT	Concord, Classic
Sink Base Cabinet With A Single Df	SB36-SDF	Concord, Classic
Sink Base Cabinet With A Single Df	SB36-SDF-HR	Concord, Classic
Sink Base Cabinet With A Single Df	SB36-SDF-TOT	Concord, Classic
Full Height Base Cabinet With Drawer	B12-FH,POD	Concord, Classic
Full Height Base Cabinet With Drawer	B12-FH-POS1,POD	Concord, Classic
Full Height Base Cabinet With Drawer	B12-FH-POS2,POD	Concord, Classic
Full Height Base Cabinet With Drawer	B15-FH,POD	Concord, Classic
Full Height Base Cabinet With Drawer	B15-FH-POS1,POD	Concord, Classic
Full Height Base Cabinet With Drawer	B15-FH-POS2,POD	Concord, Classic
Full Height Base Cabinet With Drawer	B18-FH,POD	Concord, Classic
Full Height Base Cabinet With Drawer	B18-FH-POS1,POD	Concord, Classic
Full Height Base Cabinet With Drawer	B18-FH-POS2,POD	Concord, Classic
Full Height Base Cabinet With Drawer	B21-FH,POD	Concord, Classic
Full Height Base Cabinet With Drawer	B21-FH-POS1,POD	Concord, Classic
Full Height Base Cabinet With Drawer	B21-FH-POS2,POD	Concord, Classic
Full Height Base Cabinet With Drawer	B24-FH,POD	Concord, Classic
Full Height Base Cabinet With Drawer	B24-FH-POS1,POD	Concord, Classic
Full Height Base Cabinet With Drawer	B24-FH-POS2,POD	Concord, Classic
Full Height Base Cabinet With Drawer	B27-FH,POD	Concord, Classic
Full Height Base Cabinet With Drawer	B27-FH-POS1,POD	Concord, Classic
Full Height Base Cabinet With Drawer	B27-FH-POS2,POD	Concord, Classic
Full Height Base Cabinet With Drawer	B30-FH,POD	Concord, Classic
Full Height Base Cabinet With Drawer	B30-FH-POS1,POD	Concord, Classic
Full Height Base Cabinet With Drawer	B30-FH-POS2,POD	Concord, Classic
Full Height Base Cabinet With Drawer	B33-FH,POD	Concord, Classic
Full Height Base Cabinet With Drawer	B33-FH-POS1,POD	Concord, Classic
Pantry Cabinet	PC1524x84	Classic (Broadway & Milano)
Pantry Cabinet	PC1524X90	Classic (Broadway & Milano)
Pantry Cabinet	PC1524X96*	Classic (Broadway & Milano)
Pantry Cabinet	PC1824X84	Classic (Broadway & Milano)
Pantry Cabinet	PC1824X90	Classic (Broadway & Milano)
Pantry Cabinet	PC1824X96	Classic (Broadway & Milano)
Pantry Cabinet	PC2424X84	Classic (Broadway & Milano)
Pantry Cabinet	PC2424X90	Classic (Broadway & Milano)
Pantry Cabinet	PC2424X96	Classic (Broadway & Milano)
Pantry Cabinet	PC3024X84	Classic (Broadway & Milano)
Pantry Cabinet	PC3024X90	Classic (Broadway & Milano)
Pantry Cabinet	PC3024X96	Classic (Broadway & Milano)

New Items

Item	SKU	Collection(s)
Full Height Base Cabinet With Drawer	B33-FH-POS2,POD	Concord, Classic
Full Height Base Cabinet With Drawer	B36-FH,POD	Concord, Classic
Full Height Base Cabinet With Drawer	B36-FH-POS1,POD	Concord, Classic
Full Height Base Cabinet With Drawer	B36-FH-POS2,POD	Concord, Classic
Full Height Base Cabinet With Drawer	B42-FH,POD	Concord, Classic
Full Height Base Cabinet With Drawer	B42-FH-POS1,POD	Concord, Classic
Full Height Base Cabinet With Drawer	B42-FH-POS2,POD	Concord, Classic
Full Height Base Cabinet With Drawer	B48-FH,POD	Concord, Classic
Full Height Base Cabinet With Drawer	B48-FH-POS2,POD	Concord, Classic
Full Height Base Cabinet With Drawer	B48-FH-POS4,POD	Concord, Classic
Full Height Base Cabinet With Drawer	B9L-FH,POD	Concord, Classic
Full Height Base Cabinet With Drawer	B9R-FH,POD	Concord, Classic
Glass Shelves 3pcs With Clips For A 12" Cabinet	PRT-GLS-SHELF-12	Concord, Classic
Glass Shelves 3pcs With Clips For A 15" Cabinet	PRT-GLS-SHELF-15	Concord, Classic
Glass Shelves 3pcs With Clips For A 18" Cabinet	PRT-GLS-SHELF-18	Concord, Classic
Glass Shelves 3pcs With Clips For A 24" Cabinet	PRT-GLS-SHELF-24	Concord, Classic
Glass Shelves 3pcs With Clips For A 30" Cabinet	PRT-GLS-SHELF-30	Concord, Classic
Glass Shelves 3pcs With Clips For A 36" Cabinet	PRT-GLS-SHELF-36	Concord, Classic
Tall Filler 10 Foot	F3120	Luxor, Concord, Classic
Tall Filler 10 Foot	F6120	Luxor, Concord, Classic
Toe Kick End Cap	TKS-CAP	Luxor, Concord, Classic
3/4" Toe Kick	TKS.75	Concord, Classic
2-Drawer Base Cabinet, Pull Out Drawer	DB24-2-POD	Concord, Classic
2-Drawer Base Cabinet, Pull Out Drawer	DB30-2-POD	Concord, Classic
2-Drawer Base Cabinet, Pull Out Drawer	DB33-2-POD	Concord, Classic
2-Drawer Base Cabinet, Pull Out Drawer	DB36-2-POD	Concord, Classic

Custom Items

Item	SKU	Collection(s)
Custom Aluminum Frame Glass Doors	DR-CUS	Classic
Custom Door	DR-CUS	Concord, Classic
Custom Base Cabinet	CAB-CUS-BASE	Concord, Classic
Custom Wall Cabinet	CAB-CUS-WALL	Concord, Classic
Custom Tall Cabinet	CAB-CUS-TALL	Concord, Classic
Custom Hood	CAB-CUS-HOOD	Concord, Classic

New Modifications

Item	SKU	Collection(s)
Broom Divider	CT-BROOM-DIVIDER	Concord, Classic
Remove Cabinet Floor	CT-CUT-FLOOR	Concord, Classic

Discontinuations:

Item	SKU	Collection(s)
All Concord RTA	N/A	Concord
Post	POST-P	Concord
Post	POST-F	Concord
Post	POST-P-CR	Concord
Post	POST-F-CR	Concord
Spindle	SPIN-P-30	Concord
Spindle	SPIN-P-36	Concord
Spindle	SPIN-P-42	Concord
Spindle	SPIN-F-30	Concord
Spindle	SPIN-F-36	Concord
Spindle	SPIN-F-42	Concord
Corbel	CBO6	Concord
Corbel	CBO9	Concord
Corbel	CBO13	Concord
Corbel	CBM6	Concord
Corbel	CBM9	Concord
Corbel	CBM13	Concord
Vanguard Indigo	VG26	Vanguard
Vanguard Dove	VG22	Vanguard
Vanguard Espreso	VG11	Vanguard
Surelle Bianca	SL30	Surelle
Surelle Grigio	SL31	Surelle
Surelle Cemento	SL32	Surelle
Surelle Noce	SL33	Surelle

Contents

Introduction

Policies & Procedures	12
Cabinet Code Key	16
Collections & Styles	20
Displays & Samples	28
Cabinet Height Comparison Guide	32

BEDFORD

BY CNC CABINETRY

Door Styles & Specifications	36
Wall Cabinets	40
Base Cabinets	46
Tall Cabinets	52
Vanities & Medicine Cabinets	54
Fillers, Panels & Moldings	59
Modifications & Upgrades	64

LUXOR

BY CNC CABINETRY

Door Styles & Specifications	68
Wall Cabinets	72
Base Cabinets	82
ADA Cabinets	94
Tall Cabinets	98
Accessories	102
Vanities & Medicine Cabinets	104
Fillers, Panels & Moldings	110
Modifications & Upgrades	118

*Please see the digital spec book located at www.cnccabinetry.com/resources for the most updated information.

Concord

BY CNC CABINETRY

Door Styles & Specifications	124
Wall Cabinets	130
Base Cabinets	144
Tall Cabinets	162
Accessories	166
Vanities & Medicine Cabinets	170
Fillers, Panels & Moldings	173
Decorative Accessories	180
Modifications & Upgrades	186
Rev-a-shelf	193

Classic

BY CNC CABINETRY

Door Styles & Specifications	204
Wall Cabinets	212
Custom Glass Doors	226
Base Cabinets	232
ADA Cabinets	247
Tall Cabinets	251
Accessories	256
Vanities & Medicine Cabinets	259
Fillers, Panels & Moldings	262
Modifications & Upgrades	274
Rev-a-shelf	282

Additional Information

Marble & Granite Countertop	292
Vanguard Vanity Collection	295
Cabinet Care	300
Warranty Information	302

General Information

Policies & Procedures

Design & Pricing Software

CNC Cabinetry provides a product catalog compatible with 2020 Design & ProKitchen Design Software. These are downloadable via our website at www.cnccabinetry.com. CNC Cabinetry does not take responsibility for discrepancies between design software and CNC Cabinetry pricing.

Terms & Conditions Standards

All prices and specifications are subject to change. Payments may be made by ACH, Check, Debit/Credit Card, or Account Credit. To apply for credit, visit http://cnccabinetry.com/creditapp/.

Placing Orders

Placing orders can be done through our CABNET program, using the excel order form found on our website or directly from ProKitchen or 2020 SKU lists. Orders will not be accepted over the phone. It is the dealers responsibility to review all quotes for accuracy and confirm before any order goes into production. If you would like the order to ship available, please note that on quote and approval. If not indicated, order will ship complete.

Once an order is placed and sent into production, NO CHANGES can be made including a change in ship date Concord and Classic orders may be changed up to 48 hours (2 business days) after an order is placed. Canceled items/orders after approval, will have a 20% restocking fee (if the order has not yet been shipped). If the cabinets have been shipped or are already palletized, customer is responsible for freight costs back to CNC Cabinetry, if applicable, and a 25% restocking fee. Non modified Luxor and/or Bedford cabinets can be returned. Modified cabinets cannot be canceled or returned. Luxor/Bedford cabinets that have been assembled by the customer cannot be returned. To cancel items from an order, please reach out to your customer service representative.

Delivery Options

- Pick-up.
- CNC truck.
- White-glove delivery available for an additional fee
- Common Carrier-Scheduled by CNC Cabinetry
    - If you have a preferred carrier please request it.
    - Please note that a per pallet fee will be applied to the order
- Common Carrier-Scheduled by Customer
    - If you need a residential liftgate, please make note of this with your carrier
    - Please note that a per pallet fee will be applied to the order

Orders are automatically scheduled for the next available delivery day to your area unless specified otherwise.

A rescheduled delivery may result in a 20% fee.

Missed pick-up appointments after 48 hours will incur storage fees of $25 per day, with a max of $250 . After 30 days, orders will be returned to stock and a restocking fee of 25% will be charged.

White Glove Delivery Service

White Glove Delivery is available with CNC truck orders. Delivery service will cost $200, which includes a job site delivery fee of $125. This fee will cover up to the first 25 cabinets. Delivery will be to the ground floor only. Orders over 25 cabinets will incur an additional fee. White Glove Delivery is also available for common carrier orders. These orders are priced per order, please contact your customer service representative for more information.

Please note: In-Home Delivery will have an extended lead time of up to 5 days.

Returns

There will be a 25% restocking fee for any returned cabinet. Shipping/Delivery charges will not be credited for any returns. It is the customer's responsibility to pay for shipping on return items. We will not accept returns on any assembled cabinets by the customer, installed cabinets, or cabinets without their original box. Non modified Luxor and/or Bedford cabinets can be returned. Non-stock cabinets, Concord, Classic, Alvic, parts including doors and drawers, custom modifications, wood hoods and countertops (post form and self-edge) are not returnable.

Once merchandise is received and inspected at our warehouse, a credit will be issued to your account for the returned merchandise less the 25% restocking fee. Please allow CNC 7-14 business days to process your credit. CNC will not accept returns after 30 days.

Damages

If a cabinet or countertop arrives damaged, please scan the QR code on the packing slip or contact your customer service and a replacement order will be issued. Pictures of the damages and your CNC sales order or P.O. number must be provided. If you do not have pictures of the damages, we will send the replacement/s for the full price and credit will be applied once we receive the pictures. Do not install damaged cabinets. CNC will not credit damaged cabinets that have been installed. CNC will not credit damaged cabinets after 30 days of delivery.

Lead times

Cut-off time is 5:00pm Eastern time (M-TH) 3:00 pm Eastern time (Friday) for assembled and unassembled cabinets in order to meet standard lead times. Extended lead times will occur for orders containing 75 cabinets or more. An extended lead time will also occur for any post-form or square-edge countertops with cut outs, cut-downs, or assembled miters and for stocked countertops over 12 pieces.

Shipping

CNC offers delivery service with our own fleet of trucks that will deliver within the local New Jersey tri-state area and areas within a 3-hour driving radius of South Carolina, Florida, Texas and Nevada for a minimum charge. Local deliveries will be assessed for pricing based on gas rates. Rates will be reassessed every 90 days. Deliveries are curbside only. Jobsite deliveries are available upon request for a minimal fee. White-glove delivery service is available upon request . Please contact your Customer Service representative for pricing and details.

We ship via Common Carrier, where the best available pallet rate will be chosen. If a customer sends their own carrier to pick-up cabinets, CNC will not be responsible for filing damage claims. Please note that a per pallet fee will be applied to the order.

Floor load truckloads will be charged 250.00 per truckload.

Refused orders or missed pick-ups will be charged a fee to reschedule the delivery or pick-up.

Starting January 1st, 2026, no changes can be made after 48 hours including the ship date.

Limited 5-Year Warranty

Please see our updated Limited 5-Year Warranty on our Bedford line (Country Oak & Dover) located on page 302.

Limited Lifetime Warranty

Please see our updated Limited Lifetime Warranty located on page 303.

Cabinet Code Key

Cabinet Code Key

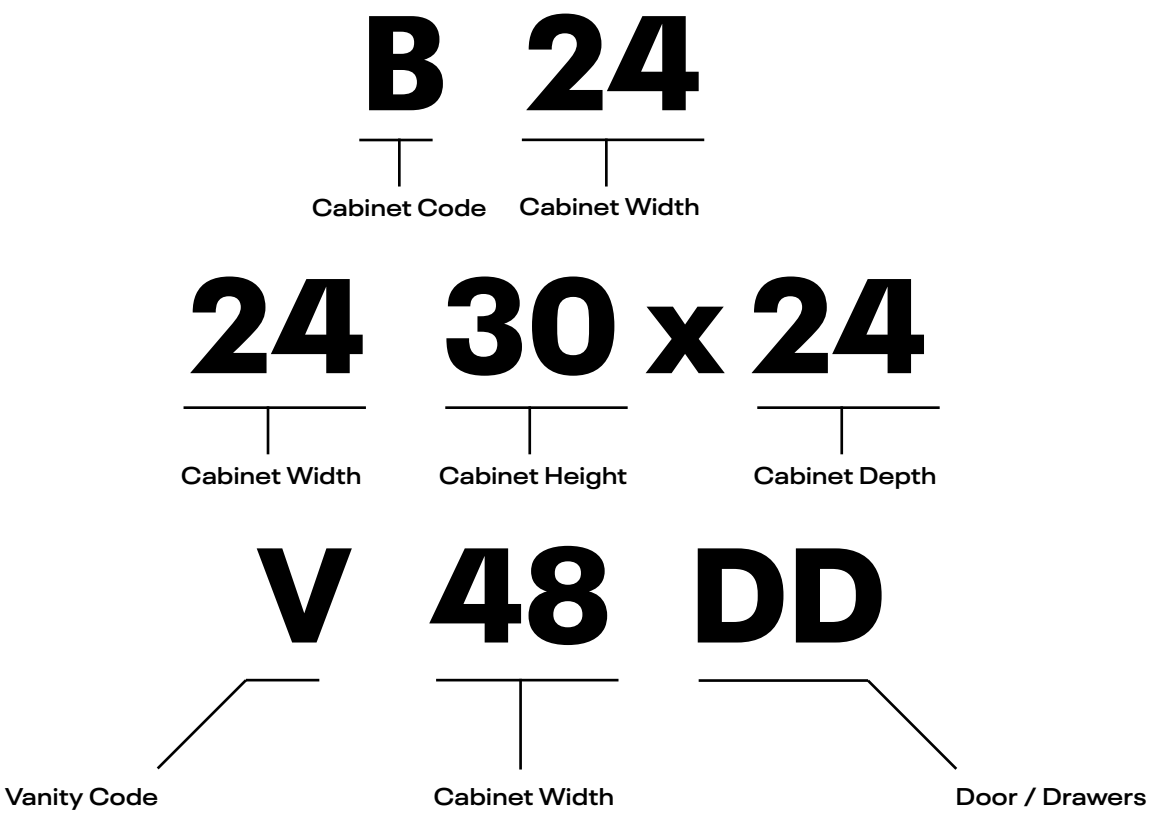

When looking at product codes it is important to note each element within the code in order to ensure you are ordering the correct cabinet piece. For example, the codes displayed above would translate to:

Base Cabinet; 24″ Wide x 34½″ High

Wall Cabinet; 24″ Wide x 30″ High x 24″Deep

Vanity Cabinet; 48″ Wide x 21″ Deep; Double Drawers

Specialty items and accessories can also have additional abreviations included in a SKU such as:

FH: Full Height

POS: Pull out Shelf

POD: Pull out Drawer

L/R: Door Left/Right

HA/HR: Handicap Accessible/Removable

FL/FR: Finished Left/Right Side

F2: Fnished Two sides

5P: 5 Piece Drawer Front Upgrade

Please note the following when selecting and ordering cabinets:

Wall Cabinets

- Standard Wall cabinets heights are 12″ , 15″, 18″, 24″, 30″, 36″ & 42″
- Standard Wall cabinets are 12″ or 24″ deep

3030 - Wall Cabinet
CW - Corner Wall Cabinet
BLW - Blind Wall Cabinet
WSQ - Square Corner Wall Cabinet
WEC - Wall End Cabinet
MW - Microwave Cabinet
PD-Pocket Door
BCC-Bookcase
CT-Coutnertop Cabinet
WOC-Wall Open Cabinet
WSP- Wall Spice Rack

Base Cabinets

- Standard Base cabinets are 34 ½″ high
- Standard Base cabinets are 24″ deep

B - Base Cabinet
DB - Drawer Base Cabinet
BLB - Blind Base Cabinet
CSF/CSFFL - Diagonal Corner Sink Front/Floor
ER - Easy Reach
LS - Lazy Susan
CSB- Corner Sink Base
CAR - Lazy Susan Corner Base Cabinet
SB - Sink Base
SB-FS - Farm Sink Base
BWBK - Waste Basket Cabinet
BEC - Base End Cabinet
BSP - Base Spice Rack
MCB - Microwave Base

Handicap Accessible/Removable

- Handicap Accessible/Removable cabinets are indicated with 'HA' or 'HR' at the end of a product code
- Handicap Accessible/Removable cabinets are 32.5″ tall in Country and Luxor, and 34.5″ tall in Concord and Classic.
- **Please note:** Handicap Removable cabinets may not meet ADA requirements

Tall Cabinets

- Standard Tall cabinets heights are 84″, 90″ & 96″
- Standard Tall cabinets are 21″ or 24″ deep

PC-Pantry
UC - Utility Cabinet
OV - Oven Cabinet
OVD - Double Oven Cabinet

Accessories

POS - Pullout Shelf
POD - Pullout Drawer
WCD - Wooden Cutlery Drawer
WH - Wood Hoods
F-SHELF - Floating Shelf

Vanity Cabinets

- Standard Vanity Cabinets are 21″ deep
- Vanity Cabinets are 32½″ high for Country and Classic cabinets
- Vanity Cabinets are 34½″ high for Dover, Luxor, Concord and Classic cabinets

VSD - Vanity Sink Base
VB- Vanity Base
VD - 1 Door and 2 Drawer Vanity Sink Base
VDD - 2 Door and 4 Drawer Vanity Sink Base
VDB - Vanity Drawer Base
VBD - Bottom Drawer Vanity
VDD - Double Drawer Vanity
VOB - Open Bottom Vanity
MC - Medicine Cabinet
DD - Desk Drawer

Collections & Styles

BEDFORD

BY CNC CABINETRY

The Bedford Collection is our standard overlay cabinet constructed from all plywood. The wall and base cabinets are equipped with 3/4″ plywood adjustable shelves and adjustable hinges. Drawer boxes are made with plywood and have side mount glides.

***Please note, cabinet door and box dimensions may vary by 1/8″**

Country Oak

Price Code
R

A standard overlay, 1″ reveal, 5 piece solid wood with a raised MDF veneer center panel Mortise and Tenon construction, slab drawer front. Solid wood in a Honey finish.

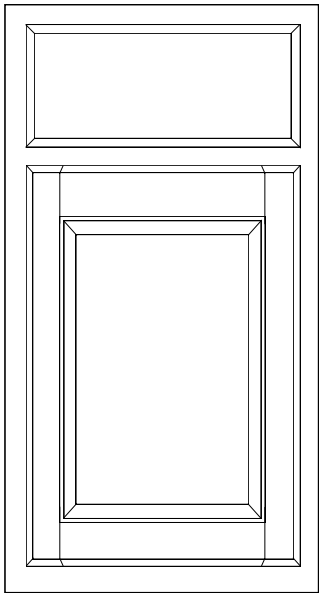

C4 - Oak

Dover

Price Code
S

A standard overlay, 1″ reveal, 2″ wide shaker style door with a flat center panel, and a slab drawer front. Includes soft-close hinges.

***Five-piece upgrade not available**
***No finished interior option**

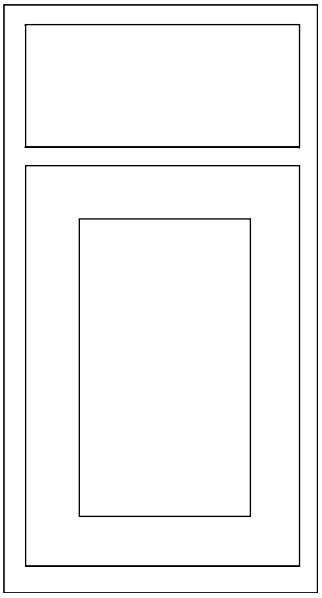

D07 - Saddle
D10 - White

LUXOR

BY CNC CABINETRY

Versatile, stylish, and dependable, the Luxor Collection has served as the backbone of CNC's mission, and its trusted center. Made of all plywood, these cabinets are equipped with ¾" adjustable shelves and adjustable soft-close hinges. All drawer boxes are made with dovetail construction and six way adjustable soft-close undermount glides. Five-piece drawer front is available as an upgrade.

***Please note, cabinet door and box dimensions may vary by 1/8"**

Luxor

Price Code
Luxor: L
5 Piece Upgrade: Z

A semi-full overlay, ½" reveal,2 ½" wide shaker style door with a flat center panel, Mortise and Tenon construction, and a slab drawer front.

***All bottom drawers come with five-piece drawer fronts.**

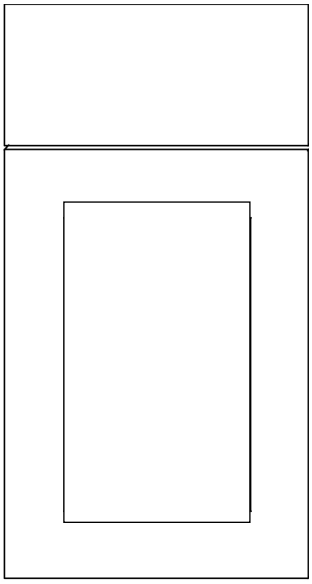

L02 - Smoky Grey
L03 - Misty Grey
L05 - Harvest
L10 - White
L11 - Espresso

Glencove

Price Code
T

A full overlay, ¼" reveal, 2 ½" wide shaker style door with a flat center panel, Mortise and Tenon construction, and a shaker drawer front.

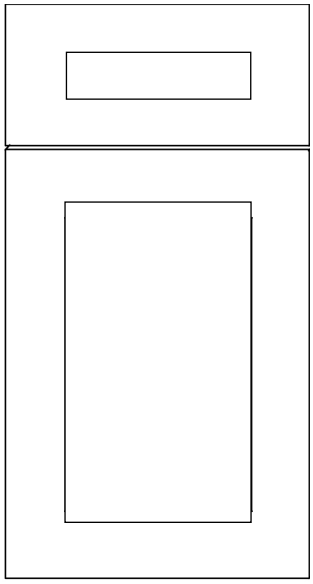

G01 - Sleek White
G07 - Saddle
G10 - White

Concord

BY CNC CABINETRY

The Concord Collection is our full-overlay all plywood cabinet, which comes with full 1/2″ back panels, complete with solid wood dovetail drawer box and a 5-piece drawer front, enhanced by a soft-close feature and full extension under-mount glides to create a smooth glide. The cabinetry is equipped with 3/4″ adjustable shelves with metal clips and six way, soft close, adjustable clip-on hinges. Natural wood finished interiors allow for practicality and ease of maintenance.

***Please note, cabinet door and box dimensions may vary by 1/8″**

Elegant

Price Code
White/Smoky Grey/Ocean: A
Stone: B
PLUS: M

A full overlay 5 piece solid wood, with solid MDF veneer flat center panel. Mortise and Tenon construction.

***All bottom drawers come with a five-piece drawer fronts.**

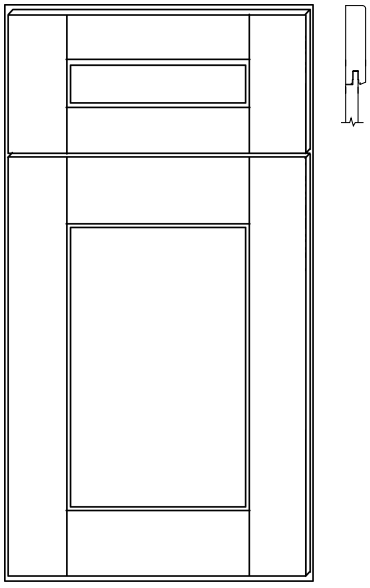

EB02 - Smoky Grey
EB10 - White
EB23 - Stone
EB27 - Ocean

Newport

Price Code
White: A
PLUS Paint: M
PLUS Stain: D

A full overlay 5 piece solid wood, with solid MDF veneer flat center panel with a 3/4″ frame.

***Reeded door upgrade available**

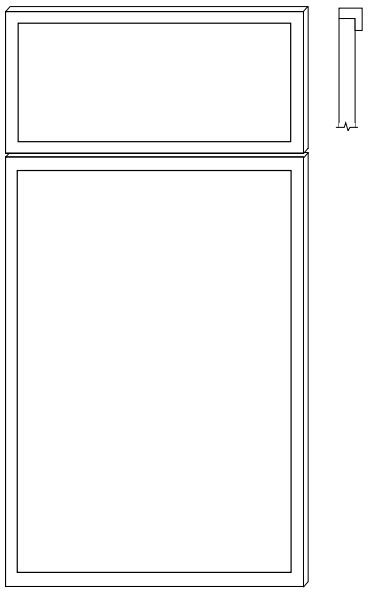

NB10 - White

Fashion

Price Code
White/Ocean: B
PLUS: N

A full overlay 5 piece solid wood, with solid MDF veneer flat center panel. Mortise and Tenon construction.

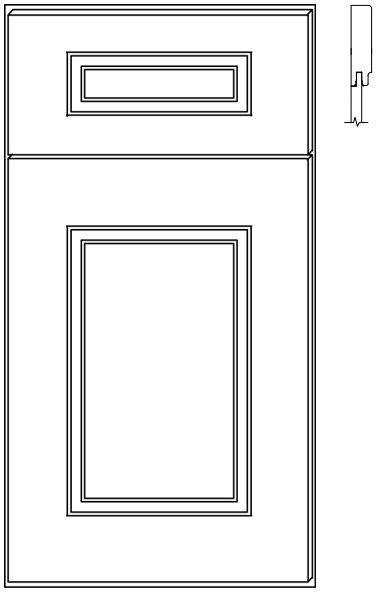

FB10 - White
FB27 - Ocean

Sydney

Price Code
White: C
PLUS Paint: O
PLUS Stain: P

A full overlay 5 piece solid wood, with solid MDF veneer flat center panel. French mitered construction.

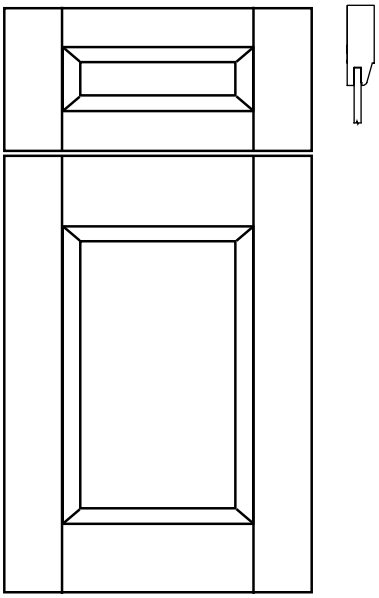

SB10 - White

Richmond

Price Code
White/Stone: C
PLUS: O

A full overlay 5 piece solid wood, with solid MDF veneer flat center panel. Mitered construction.

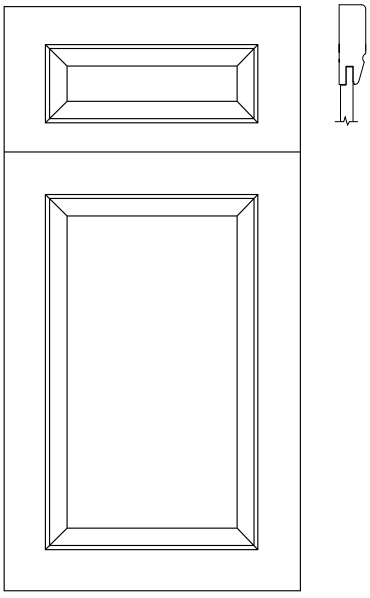

RB10 - White
RB23 - Stone

Park Avenue

Price Code
C

A full overlay 5 piece solid wood, raised panel MDF veneer center. Mitered construction.

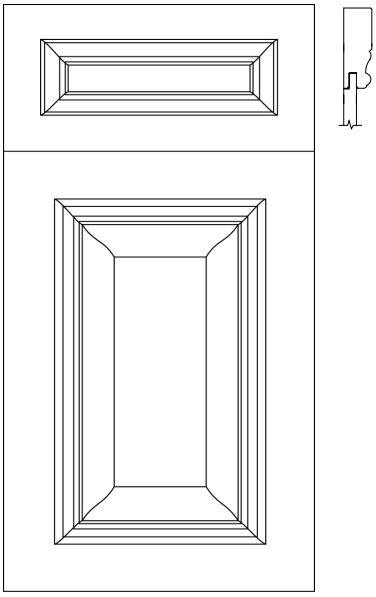

PB10 - White
PB27 - Ocean

Classic

BY CNC CABINETRY

White Laminate Box

Composed of a frame-less box construction, with double white wall metal drawer with ½" plywood bottom. Outfitted with full extension, under-mount drawer glides, as well as the soft-close feature. Features six way adjustable, clip-on soft close hinges, ¾" adjustable full-depth plywood shelves, and dowel and glue-clamped assembly construction

Maple Box

Composed of a frame-less box construction, complete with solid wood dovetail drawer box . Outfitted with full extension, under-mount drawer glides, as well as the soft-close feature. Features six way adjustable, clip-on soft close hinges, ¾" adjustable full-depth plywood shelves, and dowel and glue-clamped assembly construction.

***Please note, cabinet door and box dimensions may vary by 1/8"**

Broadway

Price Code
E

A full overlay low pressure laminate flat panel MDF door.

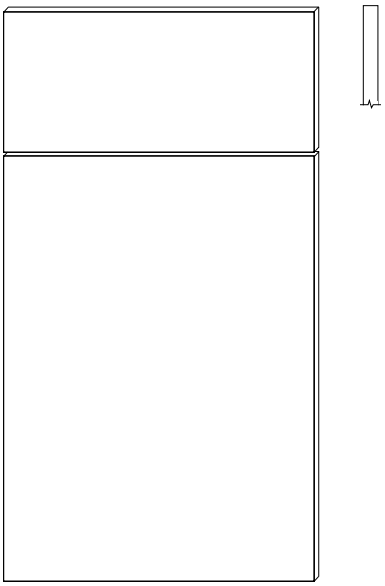

BM600 - Cotton
BM601 - Silk
BM602 - Nimbus
BM603 - Cobalt
BM604 - Graphite
BM650 - Almond
BM651 - Chestnut
BM652 - Walnut
BM653 - Coastal
BM654 - Driftwood
BM655 - Beach
BM656 - Silver Birch

Milano

Price Code
F

A full overlay slab door made from a MDF core, wrapped in PET with a matching edgeband and melamine back.

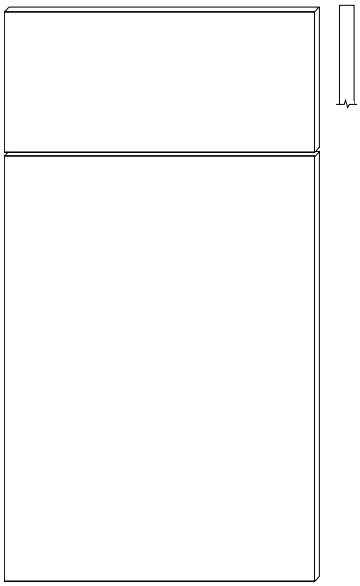

MP400 - Polar White
MP401 - Fossil Grey
MP402 - Sand
MP403 - Seaside
MP404 - Pine
MP405 - Snow
MP406 - Sunset
MP407 - Obsidian
MP450 - Mirage
MP451 - Dune
MP452 - Autumn
MP453 - Ash

Versailles

Price Code
White: G
PLUS Paint: H
PLUS Stain: I

A full overlay 5 piece solid wood, with solid MDF veneer flat center panel with a 3/4" frame.

***Reeded door upgrade available**

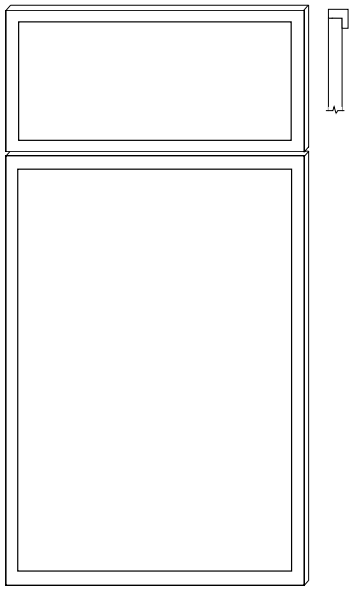

VB10 - White

Highland

Price Code
White: G
PLUS Paint: H

A full overlay reverse slim shaker door made from a MDF core, with a white melamine back and painted front.

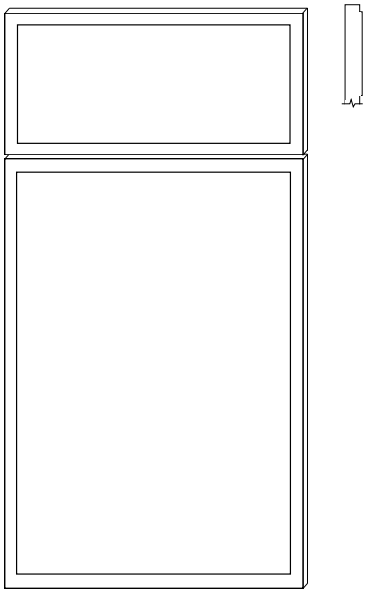

HB10 - White

Woodbourne

Price Code
White: G
PLUS Paint: H
PLUS Stain: I

A 5 piece solid wood, with solid MDF veneer flat center panel. Mortise and Tenon construction.

***Special Order Only**

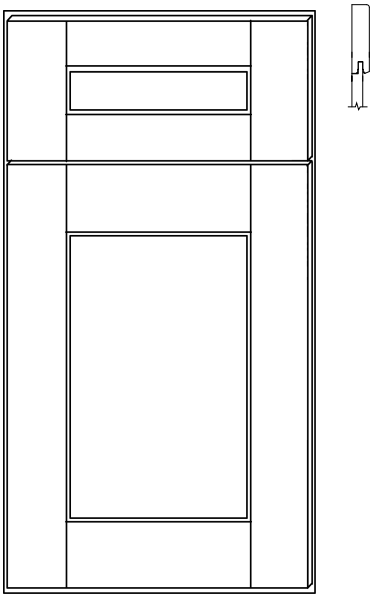

WBP02 - Smoky Grey
WBP10 - White
WBP23 - Stone
WBP27 - Ocean

Alvic

Price Code
Syncron: J
Luxe/Zenit: K

Finger-Pull
22mm / 7/8″

Slab
18mm / 3/4″

Alvic doors come with a color matching soft postforming edge band. Finger pull and slab doors are 22mm thick.

***Full Color List Available On Our Website**

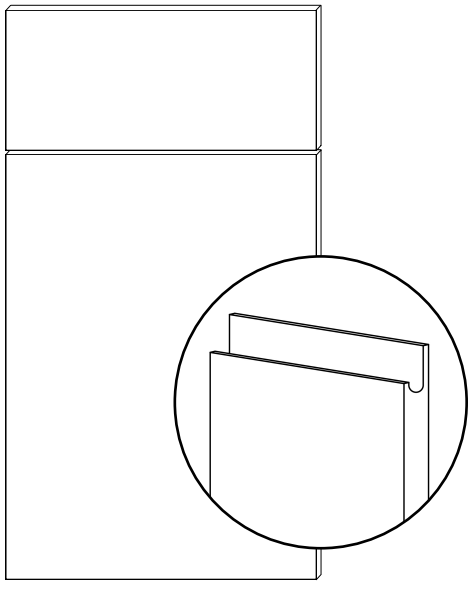

Displays & Samples

Door Samples

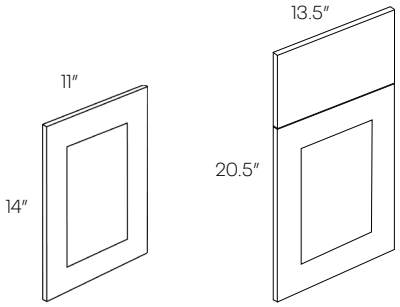

Collection	SD	SBF
Bedford	20	28
Luxor	20	28
Concord	20	28
Concord Plus (Paint)	22	28
Concord Plus (Stain)	30	35
Classic	20	28
Classic Plus (Paint)	22	25
Classic Plus (Stain)	30	35

• Net Price

Sample Kits

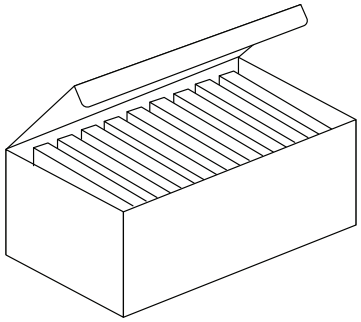

Item Number	Description	Price
Door Sample Kits		
DISP-WK-SD-SET	Includes 10 doors & full set of swatch books	280
DISP-B-SD-SET	12 Broadway doors	80
DISP-M-SD-SET	12 Milano doors	105
DISP-H-SD-SET	11 Highland doors	125
DISP-E-W-SD-SET	14 Elegant/Woodbourne doors	125
DISP-F-SD-SET	12 Fashion doors	125
DISP-V-N-SD-SET	13 Newport/Versailles doors	125
DISP-R-SD-SET	12 Richmond doors	125
DISP-S-SD-SET	13 Sydney doors	125
DISP-P-SD-SET	2 Park Ave doors	40
DISP-L-SD-SET	5 Luxor Doors	80
DISP-G-SD-SET	3 Glencove Doors	60
Sample Kits		
DISP-CB6	Single Color Block Samples	2
DISP-CB6-SET	Full Color Sample Box (46 Chips)	90
DISP-PFCHIPS	Countertop Samples	0
DISP-MLDG	Molding Samples	50
DISP-GT6x6-SET	All Granite Samples	55
DISP-GAC-KIT	Custom Glass Door Sample Kit	45
Alvic Sample Kits		
DISP-ALL-CB3x5	Alvic Luxe Color Samples	20
DISP-ALS-CB3x5	Alvic Syncron Color Samples	20

• Net Price

Mini Base Cabinets

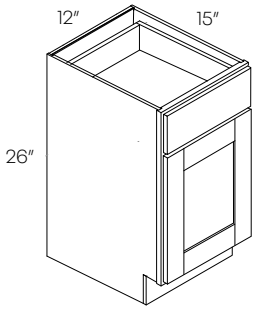

DISP-L10-B12M

Item Number	Description	Price
DISP-L10-B12M	Luxor	105
DISP-EB10-B12M	Concord (Elegant)	158
DISP-MPW400-B12M	Milano (Classic)	150
DISP-BMM600-B12M	Broadway (Classic)	150

* Available in all styles in White
• Net Price

Swatch Books

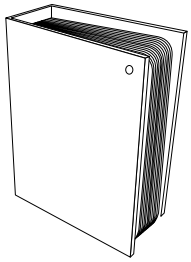

Item Number	Description	Price
DISP-C-BOOK-M	Milano Swatch Book - 12 colors	28
DISP-C-BOOK-B	Broadway Swatch Book - 12 colors	28
DISP-C-BOOK-PLUS	Plus+ Swatch Book - 12 colors	28
DISP-C-BOOK-STOCK	Concord & Luxor Swatch Book - 7 colors	28
DISP-C-BOOK-SET	Full set of swatch books	110

• Net Price

Literature

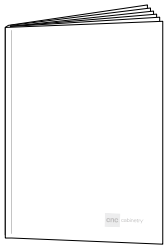

Item Number	Description	Price
DISP-SPEC	Spec Book	0
DISP-BEDCAT	Bedford Collection Catalog	0
DISP-LUXCAT	Luxor Collection Catalog	0
DISP-CONCAT	Concord Collection Catalog	0
DISP-CLASCAT	Classic Collection Catalog	0
DISP-VIBEB	Vibe Brochure	0
DISP-TRIFOLD	Door Guide	0
DISP-CNTP	Countertop Guide	0
DISP-LUXPRODUCT	Luxor Product Guide	0
DISP-DOVGUIDE	Dover Product Guide	0
DISP-VAN	Vanity Guide	0
DISP-SUMMARY	Collection Summary Guide	0
DISP-CATALOG-ALV	Alvic Guide	0
DISP-BINDKIT	Welcome Kit	0

Showroom Displays

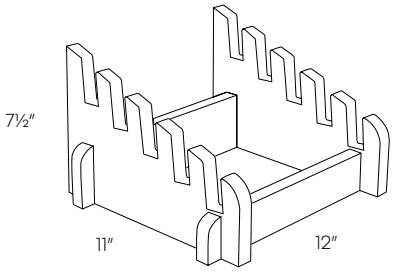

DISP-STAND
*Holds up to 5 doors

Item Number	Description	Price
DISP-STAND	Mini tabletop door stand	50
DISP-RACK	Standing Wire Rack DIsplay	125
DISP-MERCH-L05	Luxor Harvest Merchandise Display	330
DISP-MERCH-EB23	Elegant Stone Merchandise Display	330
DISP-CENTER-CON-LUX	L02, L03, L05, L10, NBP110, EBP108, EBP109, NBP201, PB27, FBP106, SBP107, RB23, EBP101, RNP102, RBP103, RBP104, NBP105, SKP200	1400
DISP-CENTER-MIX	L05, L10-5P, NKP200, SKP201, MP450, MP400, BM650, BM655, RB23, EB02, MP451, FBP105, EBP103, NBP107, FBP101, EBP105, EBP110, SKP102	1400
DISP-CENTER-CLS	BM600, MP400, BM655, MP403, MP404, MP452, MP451, BM654, HB109, BM650, BM656, MP402, MP450, BM 652, MP452, VKP200, VKP201, MP405	1400
DISP-KIOSK	Display Kiosk	1800

• Net Price

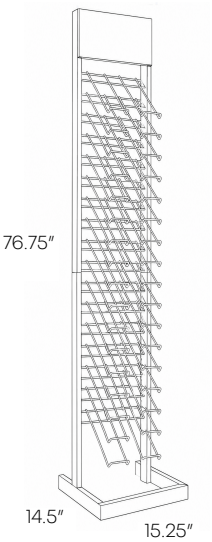

DISP-RACK
*Holds 20 doors; order separately

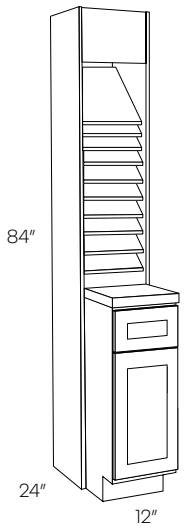

DISP-MERCH
*Holds 10 doors; order separately
*Available in L05 (Luxor White) and EB23 (Elegant Stone)

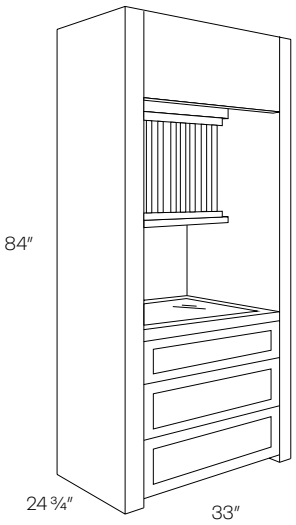

DISP-CENTER-CON-LUX
DISP-CENTER-MIX
DISP-CENTER-CLS

*Doors included
*Available in EB23 (Elegant Stone)

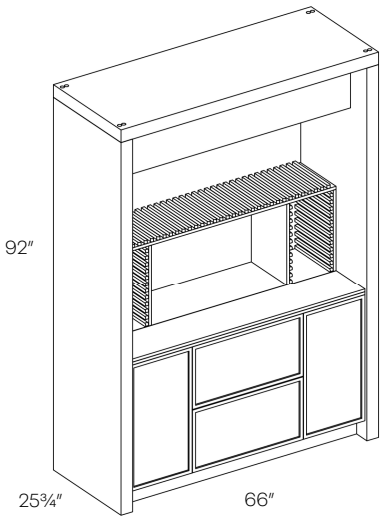

DISP-KIOSK
* Doors included
*Harvest Stain frame paired with Versailles White Cabinets
*Two mini base cabinets included

Cabinet Height Comparison

Choosing the right kitchen cabinet height isn't just a design detail—it's a decision that impacts how people live in the space every day. For property managers and contractors working in multifamily housing, or for a designer planning a home renovation, getting it right means better functionality and a more polished end result. For kitchens with 8-foot ceilings, 30-inch upper cabinets are ideal, leaving enough room for crown molding or decorative trim. Ceilings taller than 8 feet benefit from extended or stacked cabinets, offering additional storage and a sophisticated aesthetic.

Whether you're outfitting a single-family kitchen or tackling large-scale renovations, understanding cabinet height standards and options can make a measurable difference. Here's a practical guide to help you select the ideal cabinet height for your next multifamily project.

Wall Cabinets

- Standard Wall cabinets heights are 12″ , 15″, 18″, 24″, 30″, 36″ & 42″
- Standard Wall cabinets are 12″ or 24″ deep

Base Cabinets

- Standard Base cabinets are 34 ½″ high
- Standard Base cabinets are 24″ deep

Tall Cabinets

- Standard Tall cabinets heights are 84″, 90″ & 96″
- Standard Tall cabinets are 21″ or 24″ deep

Vanity Cabinets

- Standard Vanity Cabinets are 21″ deep
- Vanity Cabinets are 32½″ high for Country cabinets
- Vanity Cabinets are 34½″ high for Dover, Luxor, Concord and Classic cabinets

Handicap Accessible/Removable

- Handicap Accessible/Removable cabinets are indicated with 'HA' or 'HR' at the end of a product code
- Handicap Accessible/Removable cabinets are 32.5″ tall in Country and Luxor, and 34.5″ tall in Concord and Classic.

***Please note:** Handicap Removable cabinets may not meet ADA requirements

84″ Tall Height Comparison Guide

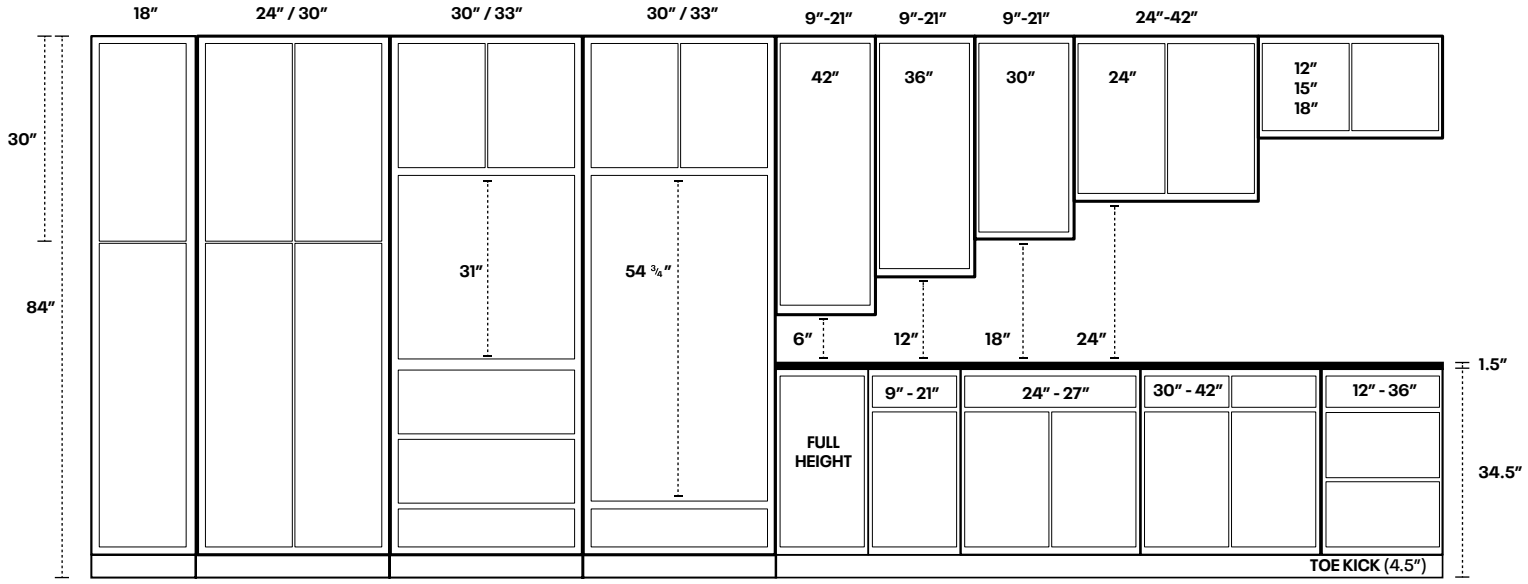

cnc cabinetry

90″ Tall Height Comparison Guide

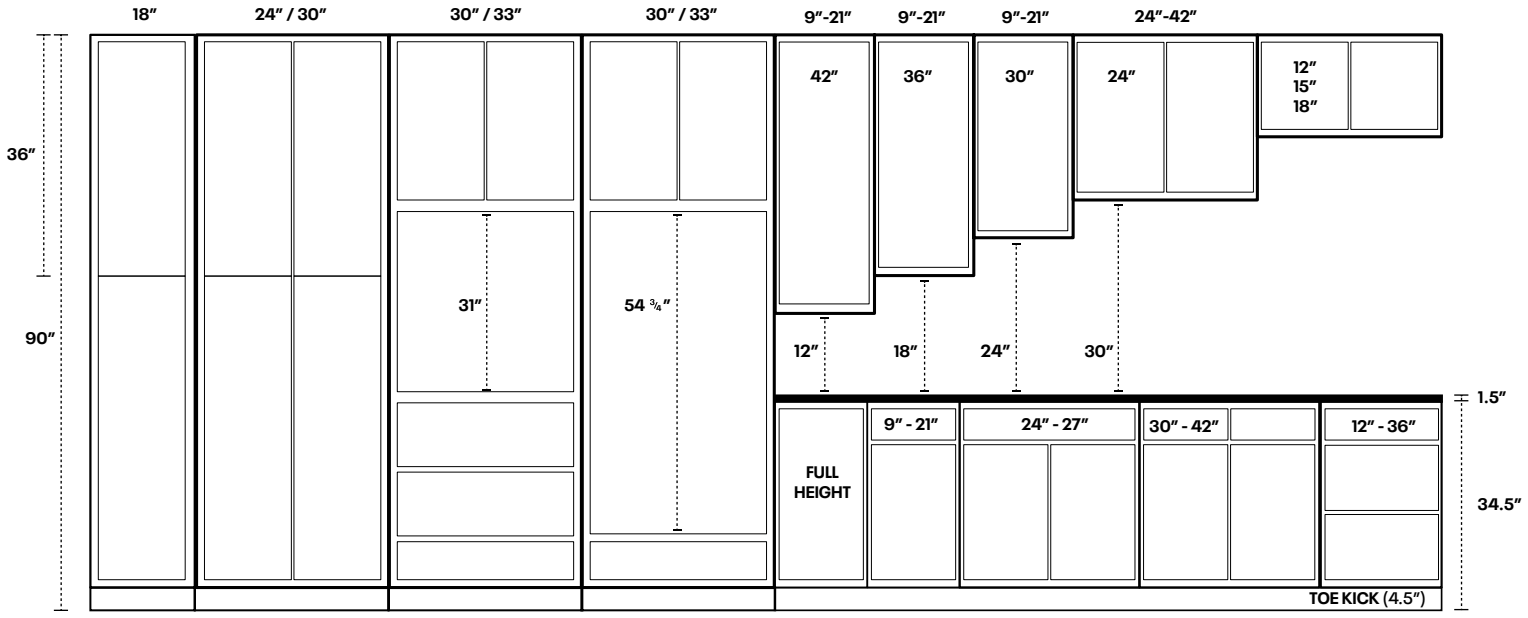

96″ Tall Height Comparison Guide

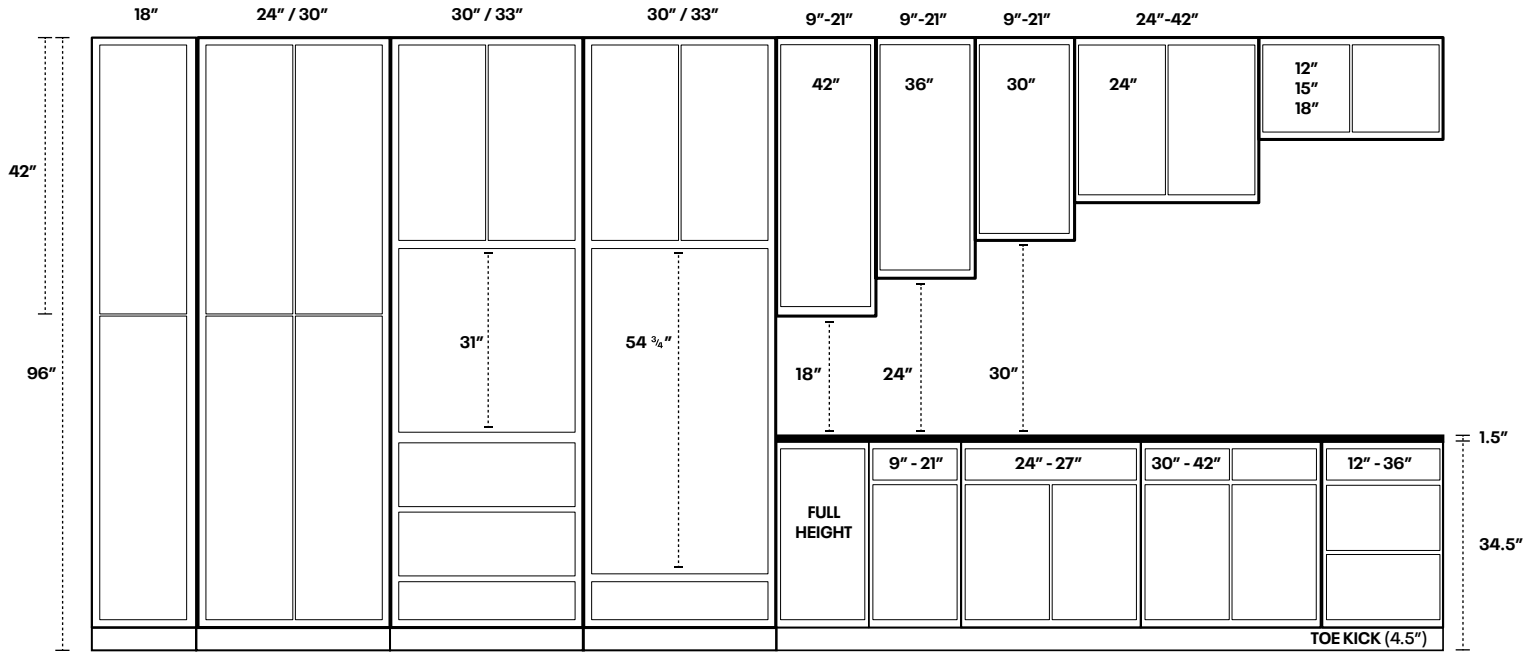

BEDFORD

BY CNC CABINETRY

Cabinet & Door Information

Country Oak

Standard Overlay
1" Reveal

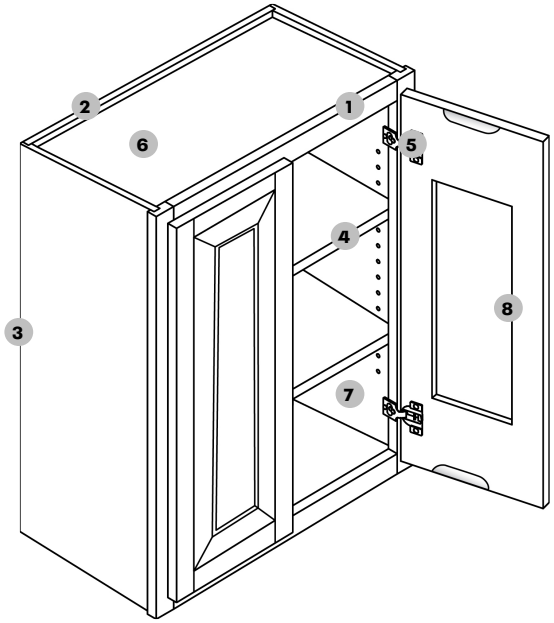

1. **Wall Frame** — ¾" thick, 1½" wide, kiln-dried solid hardwood. Assembled with glue and nails, under clamp pressure, which ensures squareness.
2. **Back panel** — ½" substrate, with 3" plywood surrounding frame,made of 1/2" plywood. Rabbeted and stapled into cabinet sides, screwed into top and bottom. Includes 1½" hanging rails.
3. **End panel** — Top and bottom 1/2" plywood substrate, with light maple woodgrain laminate finish.
4. **Shelves** — ¾" thick, plywood; fully adjustable
5. **Hinges** — Heavy duty steel concealed adjustable hinge.
6. **Top/Bottom panel** — ½" thick plywood with matching light maple woodgrain laminate interior. Exterior matches cabinets.
7. **Interior** — Woodgrain laminate interior.
8. **Doors** — Finger pull groove for easy access

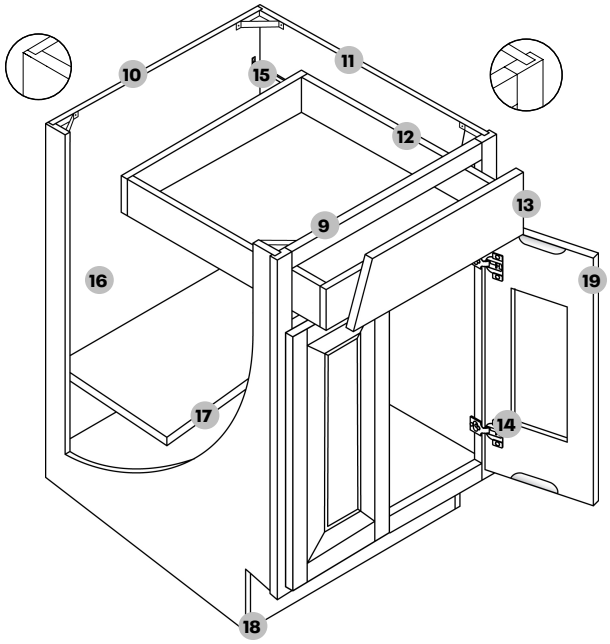

9. **Base frame** — ¾" thick, 1½" wide, kiln-dried solid hardwood. Assembled with glue and nails, under clamp pressure, which ensures squareness.
10. **Back panel** — ½" substrate plywood material. Rabbeted and stapled into cabinet sides, screwed into top and bottom.
11. **End panel** — ½" plywood substrate, with light maple woodgrain laminate interior finish.
12. **Drawers** — ½" Plywood sides with ⅜" thick bottom fastened with screws. Finger pull groove for easy access.
13. **Drawer front** — MDF painted door/drawer. Slab drawer front.
14. **Hinges** — Heavy duty steel concealed adjustable hinge.
15. **Glides** — High quality epoxy coated steel side mounted glides.
16. **Interior** — Woodgrain laminate interior.
17. **Shelves** — ¾ thick, plywood; fully adjustable. (10" deep)
18. **Toe kick** — 4 ½" Toe kick with 2 ½ " inset on all standard base and vanity cabinets.
19. **Doors** — Finger pull groove for easy access

Dover

Standard Overlay
1" Reveal

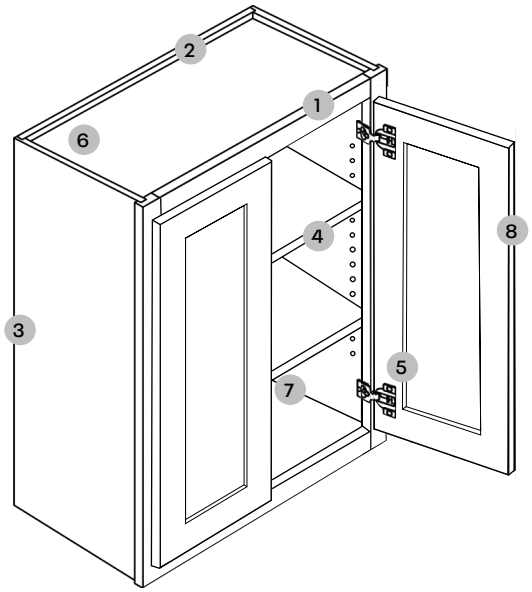

1. **Wall frame** — 1½" wide, kiln-dried solid hardwood. Assembled with glue and nails, under clamp pressure, which ensures squareness.
2. **Back panel** — Made of ½" thick plywood with matching laminate exterior.
3. **End panel** — Made of ½" thick plywood with matching laminate exterior.
4. **Shelves** — ¾" thick; fully adjustable.
5. **Hinges** — Soft-close, adjustable hinges.
6. **Top/Bottom panel** — ½" thick plywood with matching light maple woodgrain laminate interior. Exterior matches cabinets.
7. **Interior** — Woodgrain laminate interior.
8. **Doors** — 2" styles and rails shaker door with a flat center panel and 1" reveal.

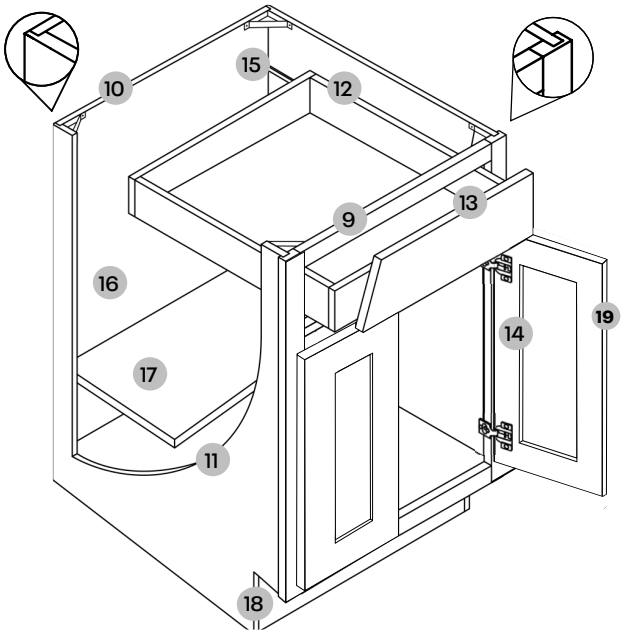

9. **Base frame** — 1½" wide, kiln-dried solid hardwood. Assembled with glue and nails, under clamp pressure, which ensures squareness.
10. **Back panel** — Made of ½" thick plywood with matching laminate exterior.
11. **End panel** — Made of ½" thick plywood with matching laminate exterior.
12. **Drawers** — 4 sided box. ½" thick plywood.
13. **Drawer front** — MDF painted door/drawer. Slab drawer front.
14. **Hinges** — Soft-close, adjustable hinges.
15. **Glides** — Epoxy-coated side mount guides.
16. **Interior** — Woodgrain laminate interior.
17. **Shelves** — ¾" thick; fully adjustable. (10" deep)
18. **Toe kick** — 4½" Toe kick with 3" inset on all standard base and vanity cabinets.
19. **Doors** — 2" styles and rails shaker door with a flat center panel and 1" reveal.

Country Oak

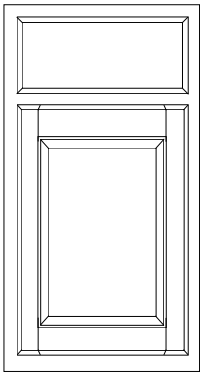

A standard overlay, 1" reveal, 5 piece solid wood with a raised MDF veneer center panel Mortise and Tenon construction, slab drawer front.solid wood in a Honey finish.

Finish	Price Code (Slab)
C4 - Honey (Stain)	R

Dover

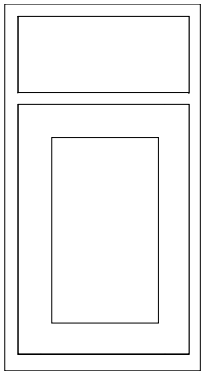

A standard overlay, 1" reveal, 2" wide shaker style door with a flat center panel, Mortise and Tenon construction, and a slab drawer front. Includes soft-close hinges.

*Five-piece upgrade not available
*No finished interior option
*Can be cut for glass

Finish	Price Code (Slab)
D07 - Saddle (Stain)	S
D10 - White (Paint)	S

Specifications & Pricing

12″ High Wall Cabinet

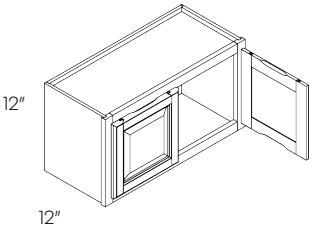

Country Oak

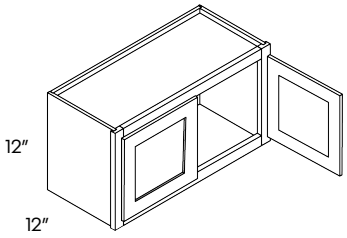

Dover

Item Number	R	S
3012	364	343
3312	376	N/A
3612	408	387

15″ High Wall Cabinet

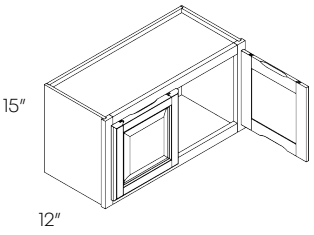

Country Oak

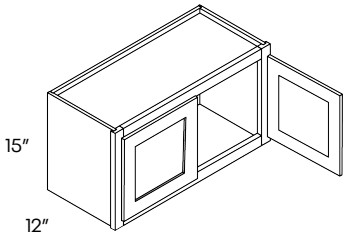

Dover

2415	360	N/A
3015	371	349
3315	387	364
3615	408	387

15″ High, 24″ Deep Wall Cabinet

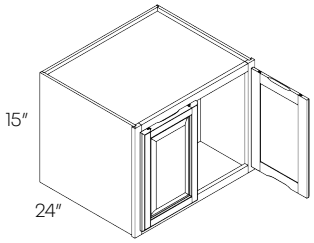

3015X24	497	N/A
3615X24	553	N/A

18" High Wall Cabinet

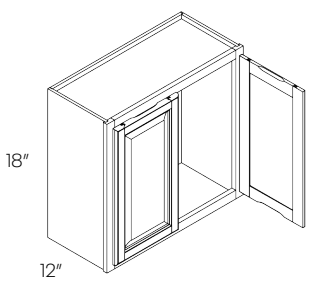

Country Oak

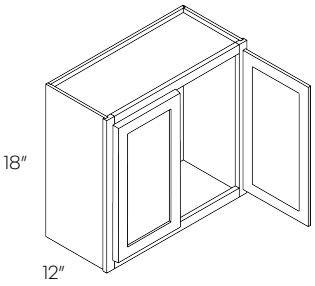

Dover

24" High Wall Cabinet

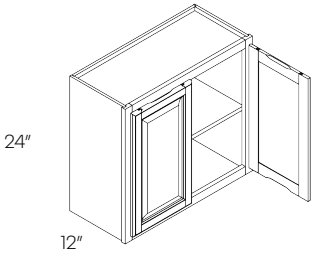

Country Oak

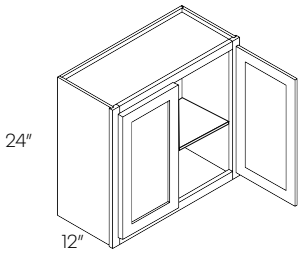

Dover

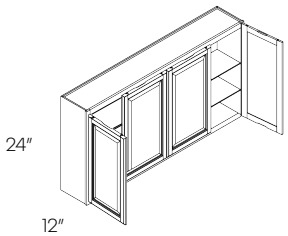

4824

24" High, 24" Deep Wall Cabinet

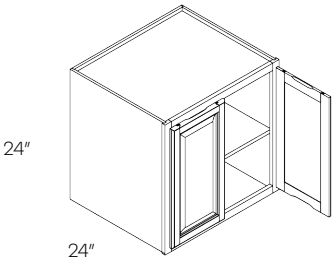

Item Number	R	S
2118 (1 Door)	340	N/A
2418	360	339
3018	374	354
3318	405	N/A
3618	466	440
1824 (1 Door)	385	N/A
2424	509	465
2724	516	477
3024	530	486
3324	549	N/A
3624	589	557
4224	701	N/A
4824 (4 Doors)	783	N/A
3024X24	690	N/A
3624X24	797	N/A

30″ High 1 Door Wall Cabinet

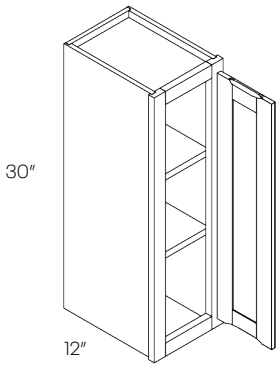

Country Oak

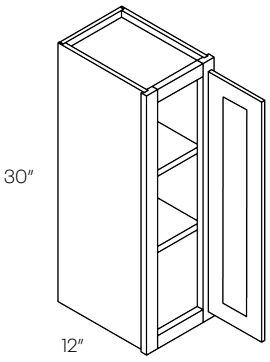

Dover

Item Number	R	S
930	293	276
1230	326	307
1530	351	332
1830	395	373
2130	472	446

30″ High 2 Door Wall Cabinet

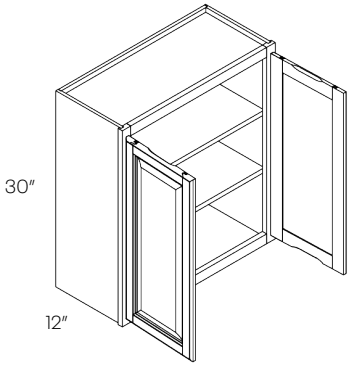

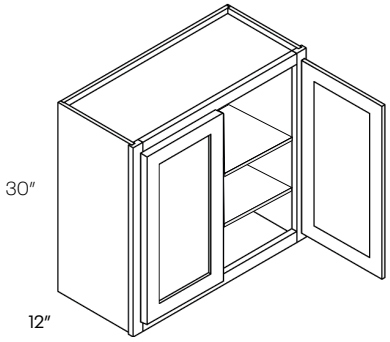

2430	503	476
2730	555	523
3030	567	537
3330	618	583
3630	657	621
3930	711	669
4230	754	711

30″ High 4 Door Wall Cabinet

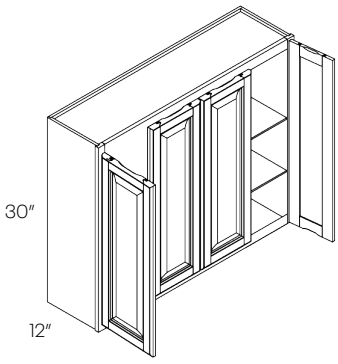

Country Oak

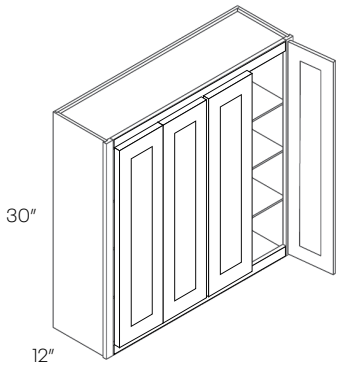

Dover

4830	854	805
5430	956	N/A

Item Number	R	S

30″ High Open Wall Cabinet

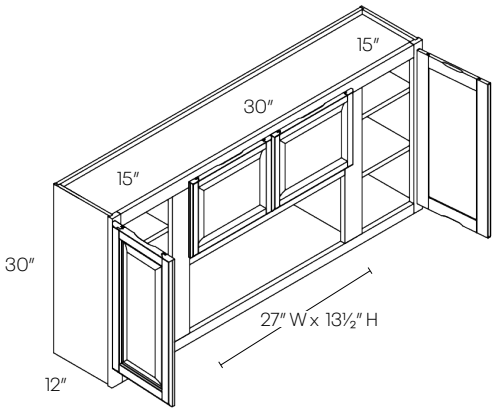

6030-O	975	N/A

• Opening Natural Interior Finish

30″ High Blind Wall Cabinet

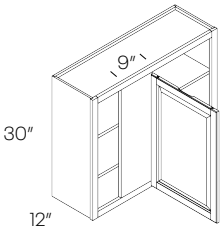

BLW27/BLW36

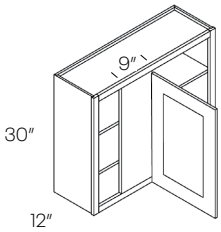

Dover

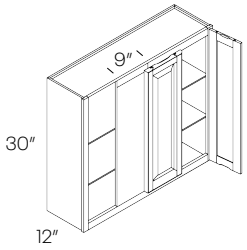

BLW39/BLW42

BLW27/3030	717	676
BLW36/3930	858	808
BLW39/4230	936	N/A
BLW42/4530	1028	N/A

• Reversible L or R
• Can be installed at actual size

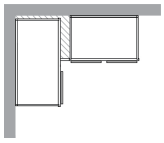

Cabinet	Min. Pull	Max. Pull	Actual Size	Door(s)	Door Opening
BLW27/3030	27″	30″	27″	1230	9″ X 27″
BLW36/3930	36″	39″	36″	2130	18″ X 27″
BLW39/4230	39″	42″	39″	2430	21″ X 27″
BLW42/4530	42″	45″	42″	2730	24″ X 27″

30″ High Diagonal Corner Wall Cabinet

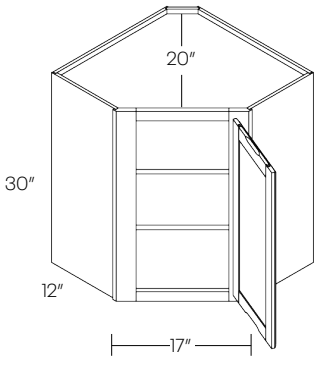

Country Oak

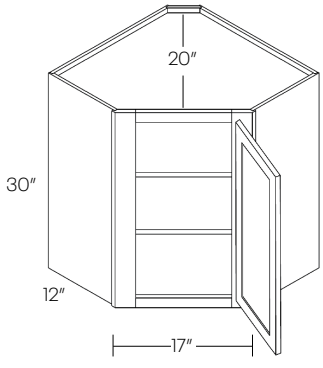

Dover

CW2430	733	693

• Requires 24″ x 24″ wall space

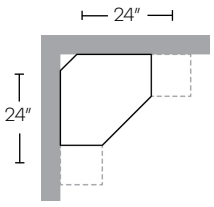

42″ High 1 Door Wall Cabinet

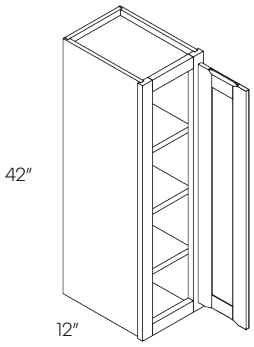

Country Oak

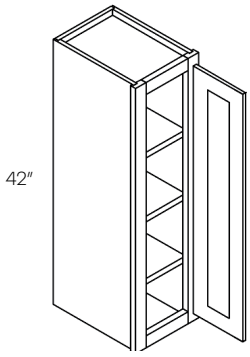

Dover

42″ High 2 Door Wall Cabinet

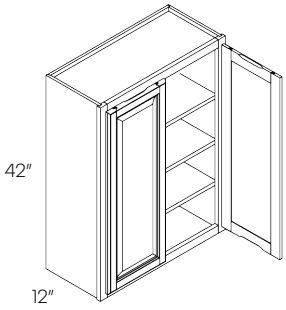

Country Oak

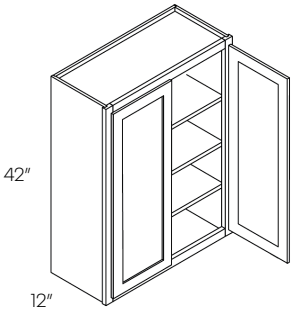

Dover

42″ High Blind Wall Cabinet

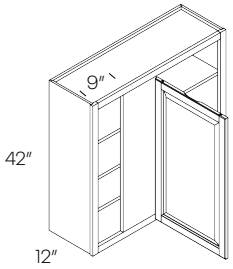

BLW27/BLW36

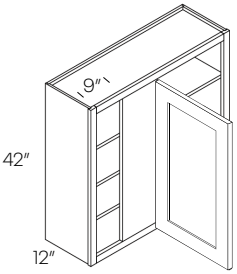

Dover

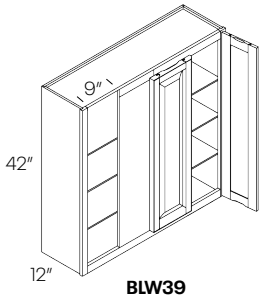

BLW39

Item Number	R	S
942	393	371
1242	428	402
1542	471	444
1842	524	494
2142	624	588
2442	670	630
2742	738	694
3042	765	720
3342	821	774
3642	869	821
4242	1011	953
BLW27/3042	925	873
BLW36/3942	1111	1049
BLW39/4242	1217	N/A

- Reversible L or R
- Can be installed at actual size

Cabinet	Min. Pull	Max. Pull	Actual Size	Door(s)	Door Opening
BLW27/3042	27″	30″	27″	1242	9″ X 39″
BLW36/3942	36″	39″	36″	2142	18″ X 39″
BLW39/4242	39″	42″	39″	2442	21″ X 39″

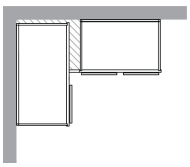

Item Number	R	S

42″ High Diagonal Corner Wall Cabinet

CW2442	956	900

• Requires 24″ x 24″ wall space

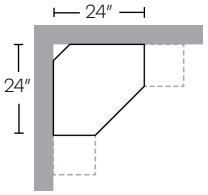

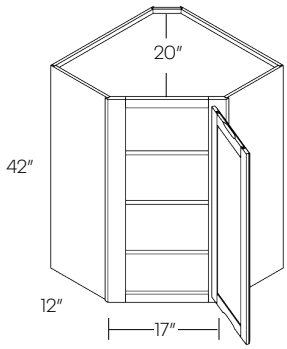

Country Oak

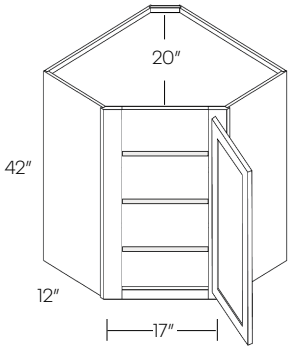

Dover

Microwave Cabinet

MW3030	956	N/A

• Opening 27″ x 15¾″
• Shelf is 15¼″ deep
• Opening has natural finish
• Shelf ships loose

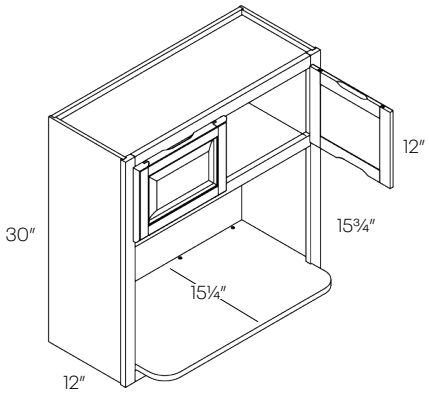

1 Door Base Cabinet

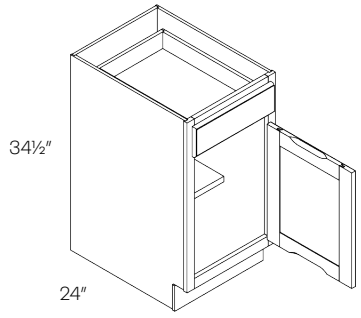

Country Oak

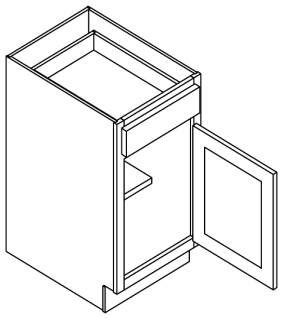

Dover

Item Number	R	S
B9	428	N/A
B9-FH	N/A	402
B12	489	462
B15	513	484
B18	539	508
B21	612	579

• 10″ Deep Shelf

1 Drawer 2 Door Base Cabinet

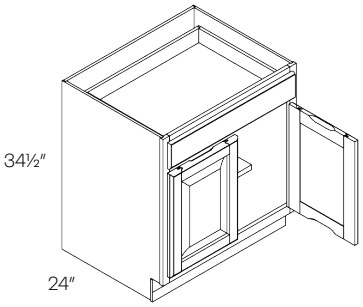

Country Oak

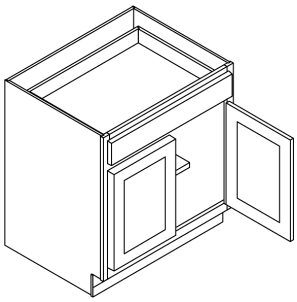

Dover

B24	653	648
B27	720	716

• 10″ Deep Shelf

2 Drawer 2 Door Base Cabinet

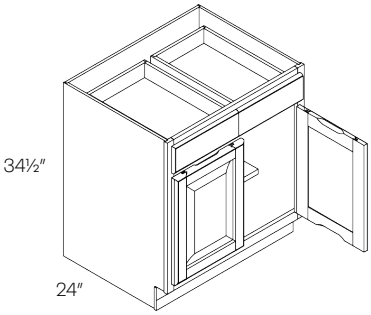

Country Oak

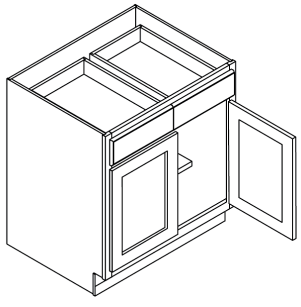

Dover

B30	786	780
B33	840	832
B36	881	873
B36-HA	N/A	873
B39	938	928
B42	988	978

• 10″ Deep Shelf

2 Drawer 4 Door Base Cabinet

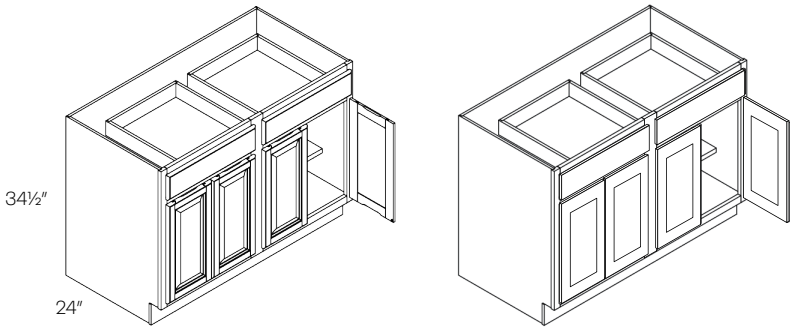

Item Number	R	S
B48	1103	1084

• 10″ Deep Shelf

3 Drawer Base Cabinet

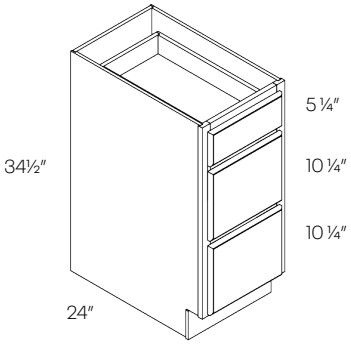

Country Oak

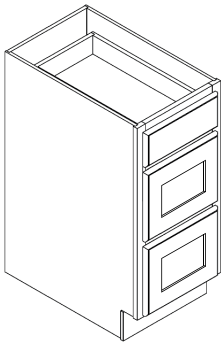

Dover

DB12	719	715
DB15	754	748
DB18	777	772
DB21	808	801
DB24	836	828
DB30	N/A	905

Blind Base Cabinet

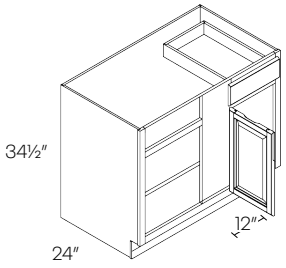

Country Oak

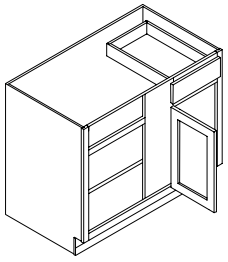

Dover

BLB36/39	875	825
BLB39/42	904	N/A
BLB42/45	965	N/A

• Reversible Left or Right
• Must be pulled to the minimum position
*Left blind shown

Cabinet	Min. Pull	Max. Pull	Actual Size	Door(s)	Door Opening
BLB36/39	36″	39″	30″	B12	9″
BLB39/42	39″	42″	36″	B15	12″
BLB42/45	42″	45″	42″	B18	15″

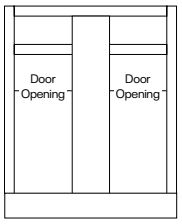

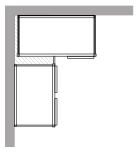

	Item Number	R	S
Diagonal Corner Sink Base Cabinet	**CSB36**	1326	N/A

• Requires 36″ x 36″ wall space.

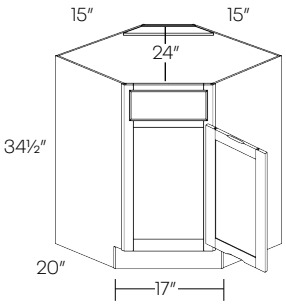

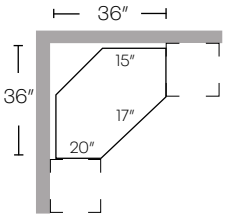

Country Oak

Diagonal Corner Sink Front	**CSF36***	351	332
	CSFFL36 (Floor)	164	168

*Requires 36″ x 36″ wall space.
*Requires Floor (sold separately)

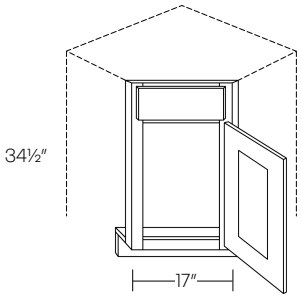

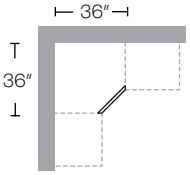

Country Oak

Carousel Corner Base Cabinet	**CAR36**	1429	N/A

• Wood rotating shelf
• Requires 36″ x36″ wall space
• Pie cut is 12″

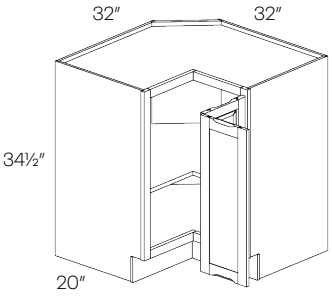

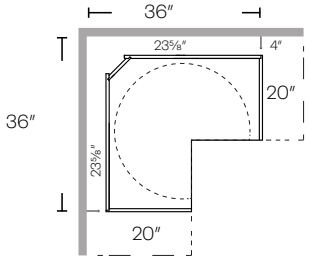

Country Oak

Lazy Susan Corner Base Cabinet

Item Number	R	S
LS36	N/A	1340

• Dover only

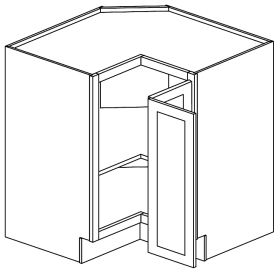

Dover

Easy Reach Corner Base Cabinet

ER36	N/A	1251

• Dover only

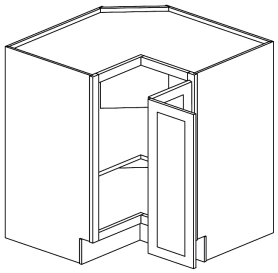

Dover

1 Drawer Front 2 Door Sink Base

SB24	647	611
SB27	695	656

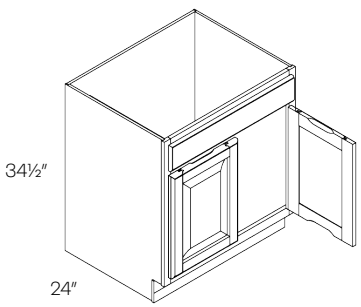

Country Oak

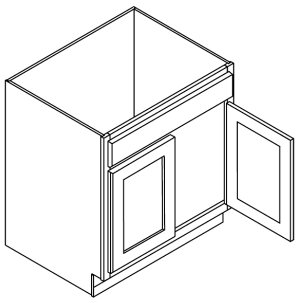

Dover

2 Drawer Front 2 Door Sink Base

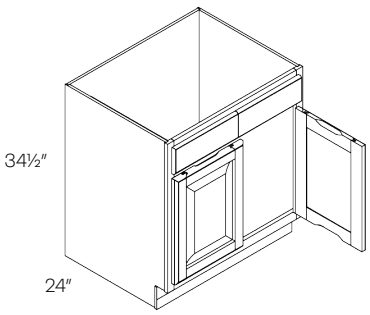

Country Oak

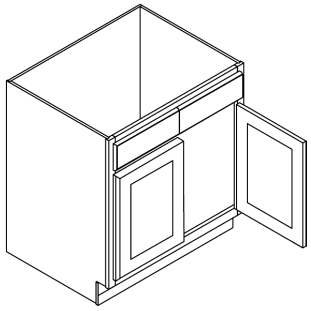

Dover

Item Number	R	S
SB30	738	694
SB33	780	736
SB36	799	754
SB39	819	773
SB42	836	790

2 Drawer 4 Door Base Cabinet

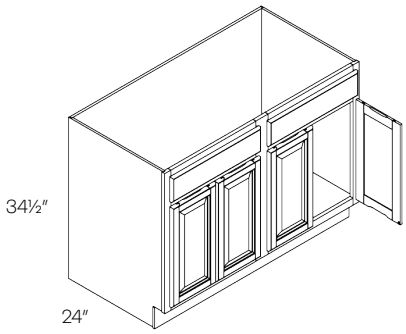

Country Oak

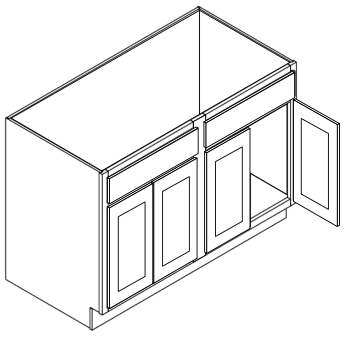

Dover

SB48	940	888

Combination Sink Base Cabinet

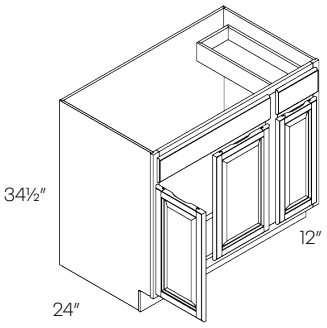

Country Oak

SB42RD	734	N/A
SB42LD	734	N/A

- Drawer is 12″ wide
- Right Drawer (RD) shown

Combination Sink Base Cabinet

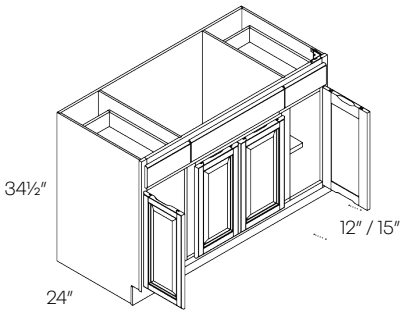

Country Oak

Item Number	R	S
SB54	1051	N/A
SB60	1145	N/A

	Door	Sink	Door
SB54	12″	30″	12″
SB60	15″	30″	15″

Single Door Utility Cabinet

Item Number	R	S
UC1824X84*	1635	1541
UC1824X96*	2124	2005

- 3 bottom adjustable shelves
- 84″ has 2 upper shelves
- 96″ has 3 upper shelves

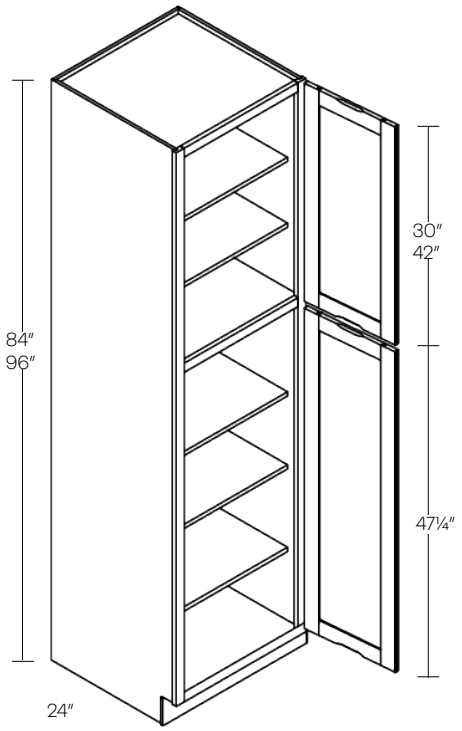

Country Oak

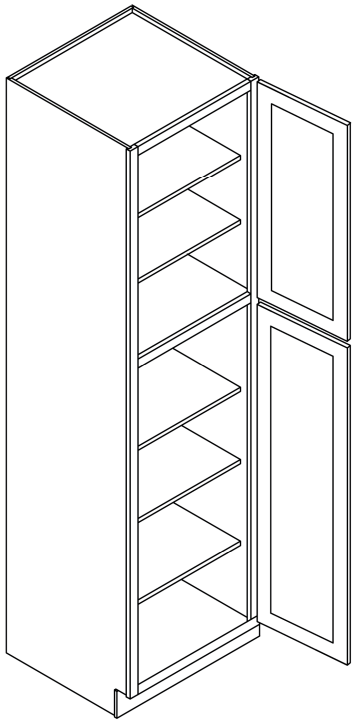

Dover

Double Door Utility Cabinet

Item Number	R	S
UC2424X84*	1883	1774
UC2424X96*	2376	2241

- 3 bottom adjustable shelves
- 84″ has 2 upper shelves
- 96″ has 3 upper shelves

*POS not available

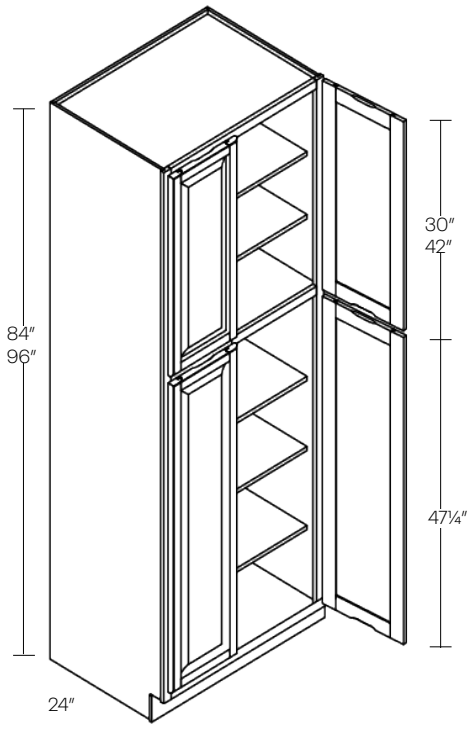

Country Oak

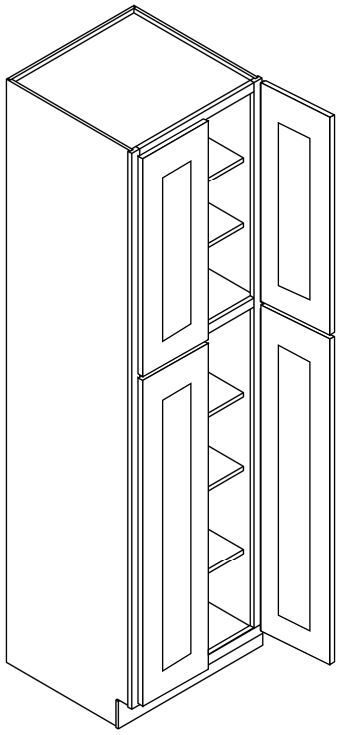

Dover

1 Door Vanity Sink Base Cabinet

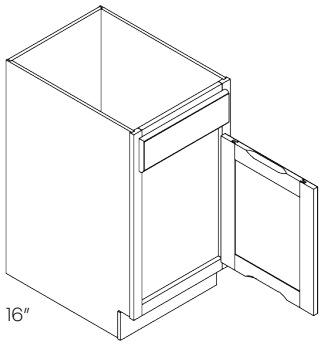

Item Number	R	S
V1816-32.5	320	N/A

• Country Oak only

Vanity Drawer Base Cabinet

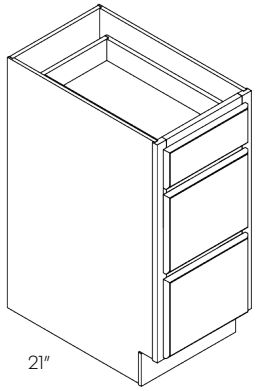

VDB15-32.5	735	N/A
VDB18-32.5	752	N/A

• Country Oak only

2 Door Vanity Sink Base Cabinet

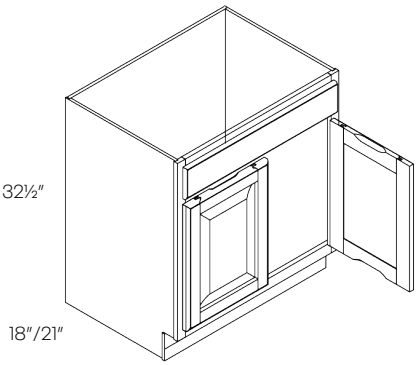

V2418-32.5	412	N/A
V3018-32.5	524	N/A
V2421-32.5	444	N/A
V3021-32.5	555	N/A
V3621-32.5	671	N/A

• Country Oak only

1 Door 2 Drawer Vanity Sink Base Cabinet

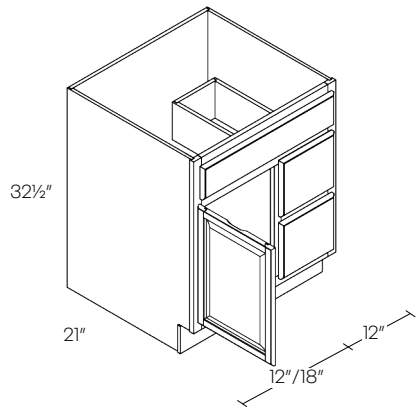

Item Number	R	S
V2421D-32.5	529	N/A
V3021D-32.5	878	N/A

- Drawers on right hand side only
- Country Oak only

1 Door 2 Drawer Vanity Sink Base Cabinet

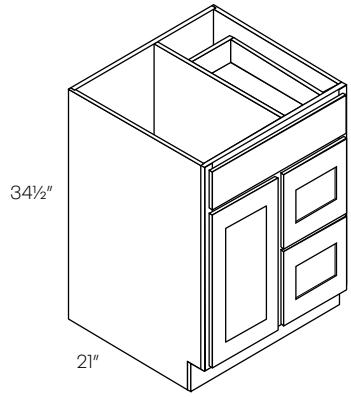

V30D	N/A	896

- Drawers on right hand side only
- Dover only

2 Door 2 Drawer Vanity Sink Base Cabinet

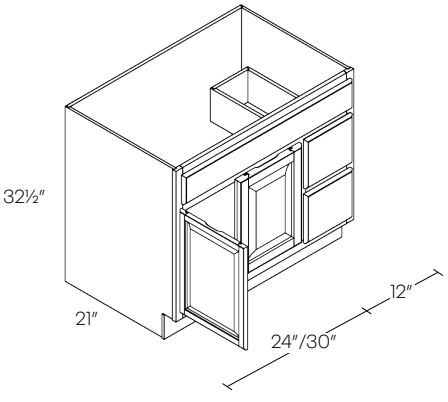

V3621D-32.5	992	N/A
V4221D-32.5	1006	N/A

- Drawers on right hand side only
- Country Oak only

2 Door 2 Drawer Vanity Sink Base Cabinet

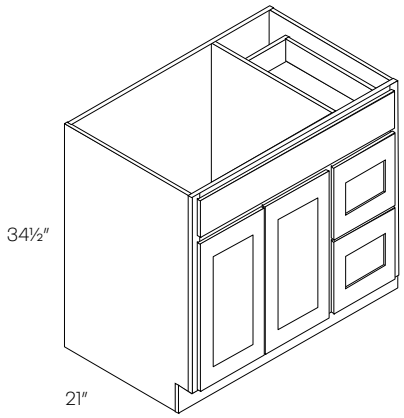

Item Number	R	S
V36D	N/A	964

- Drawers on right hand side only
- Dover only

2 Door 4 Drawer Vanity Sink Base Cabinet

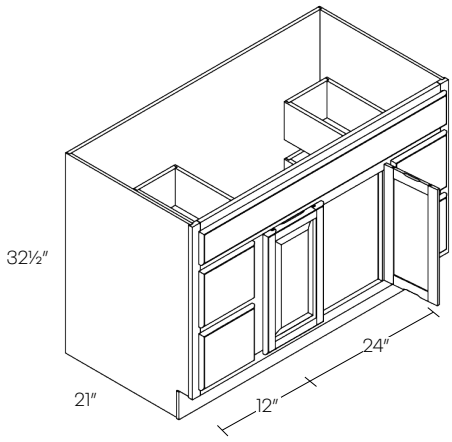

V4821DD-32.5	1151	N/A

- Country Oak only

Vanity Drawer Base Cabinet

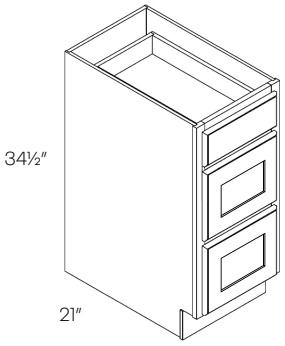

VDB12	N/A	709
VDB15	N/A	751
VDB18	N/A	769

- Dover only

2 Door Vanity Base Cabinet

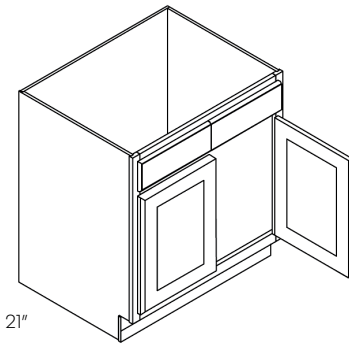

Item Number	R	S
V24	N/A	433
V24-HA	N/A	433
V2418	N/A	400
V30	N/A	540
V30-HA	N/A	540
V36	N/A	652
V36-HA	N/A	652

• Dover only

2 Door 2 Drawer Vanity Base Cabinet

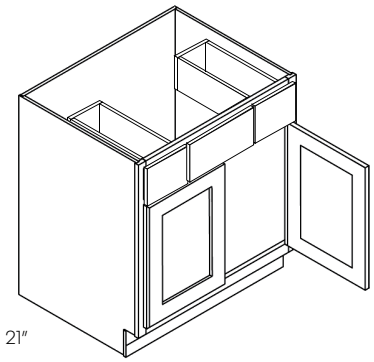

VSB36	N/A	794
VSB42	N/A	851

• Dover only

Combination Vanity Sink Base Cabinet

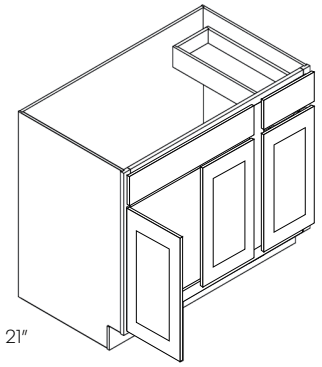

VB42	N/A	971

• Dover only

2 Door 4 Drawer Vanity Sink Base Cabinet

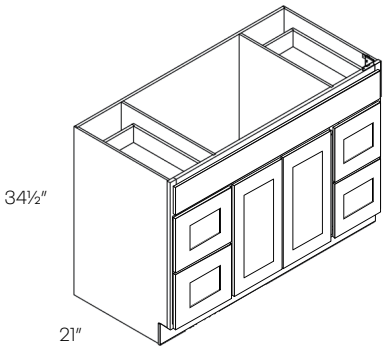

Item Number	R	S
V48DD	N/A	1118

• Dover only

4 Door 2 Drawer Vanity Sink Base Cabinet

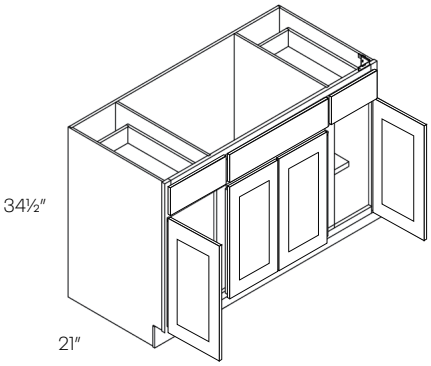

VB48	N/A	1107
VB60	N/A	1219

• Dover only

2 Door 6 Drawer Vanity Base Cabinet

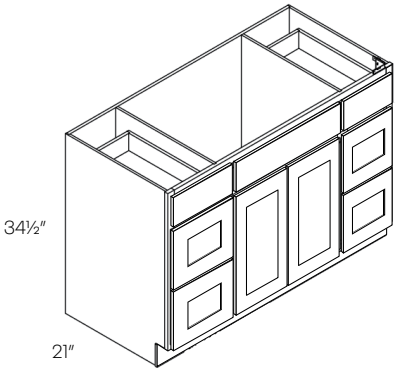

V60DD	N/A	1358

• Dover only

2 Door 6 Drawer Vanity Base Cabinet

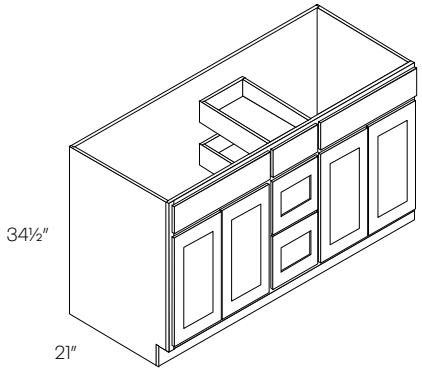

Item Number	R	S
VSD60	N/A	1293

• Dover only

Single Door Medicine Cabinet

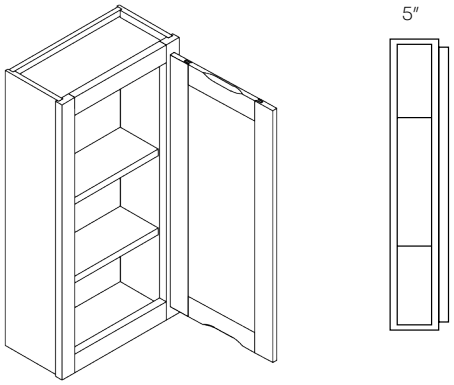

MC1830	285	N/A

• Country Oak only

Double Door Medicine Cabinet

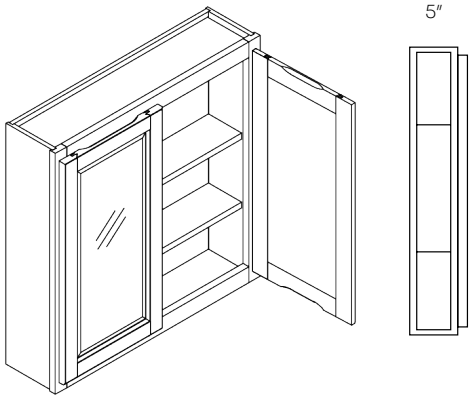

MC2430	508	N/A
MC3030	567	N/A
MC3630	638	N/A

• Country Oak only

Filler

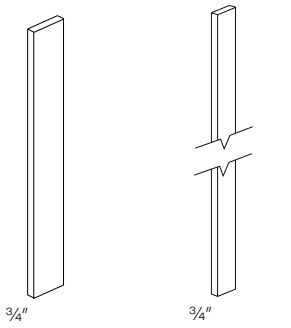

F330/F630/F342/F642 F396/F696

Item Number	R	S
F330	53	59
F630	83	101
F342	71	77
F642	116	135
F396	135	180
F696	264	299

• Fillers finished on all 4 sides

Base End Panel

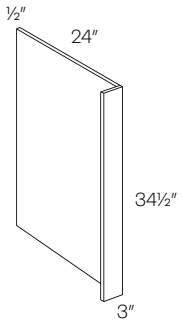

DWR

DWR3	179	306

Refrigerator End Panel

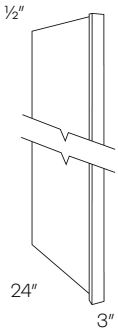

REP3

REP384	500	529
REP396	551	583

Plywood Panel

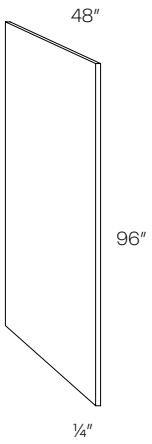

Item Number	R	S
PLY4X8	393	460

Crown Molding

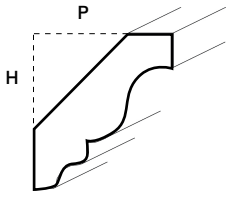

CRM
Height: 2″
Projection: 2″

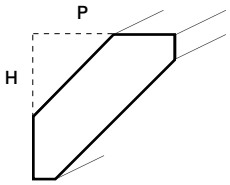

CRMS
Height: 2″
Projection: 2″

CRM	130	159
CRMS	N/A	159

- 8 feet long

Corner Molding

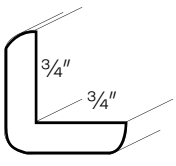

OCM

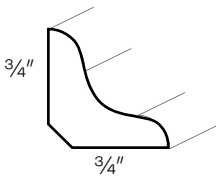

ICM

OCM	123	121
ICM	123	121

- 8 feet long

	Item Number	R	S
Scribe Molding	**SCM**	81	98

• 8 feet long

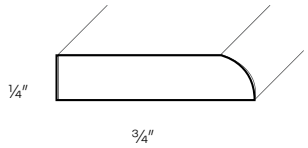

Shoe Molding	**SHM**	N/A	134

• 8 feet long

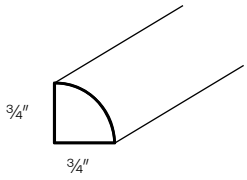

Toe Kick	**TKS**	92	101

• 8 feet long

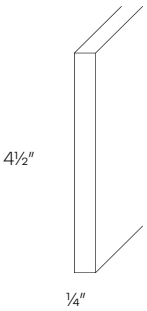

Item Number	R	S

Toe Kick End Cap

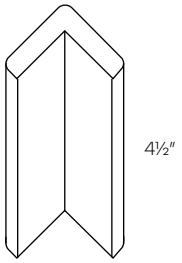

TKS-CAP	57	57

- Top and bottom sides are finished

Touch Up Kit

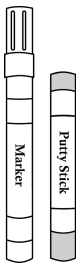

TUP

TUP	113	113

LUXOR

BY CNC CABINETRY

Cabinet & Door Information

Luxor

Semi-full Overlay
1/2" Reveal

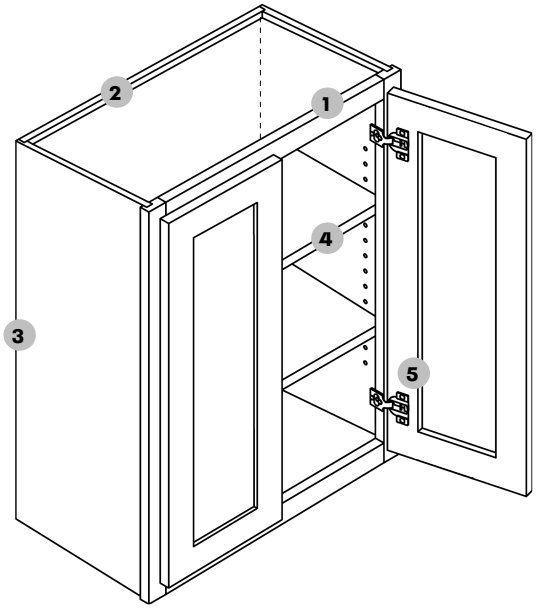

1. **Frame** — 3/4" thick Solid Wood, 1 ½" wide, kiln-dried solid hardwood. Assembled with glue and nails, under clamp pressure, which ensures squareness.
2. **Back panel** — Made of 1/2" plywood. Dado joints stapled into cabinet sides, glued and screwed into top and bottom.
3. **End panel** — Top and bottom 1/2" plywood substrate, with light maple woodgrain laminate interior. Matching exterior.
4. **Shelves** — 3/4" thick, plywood; fully adjustable.
5. **Hinges —** Heavy duty steel concealed hinge, adjustable with soft-close mechanism.

   *36" and 42" Wall cabinets will have 3 hinges

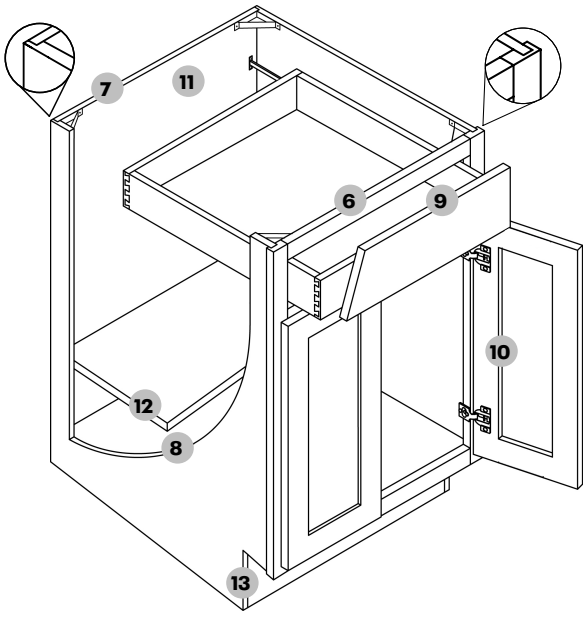

6. **Base frame** — 3/4" thick Solid Wood, 1½" wide, kiln-dried solid hardwood. Assembled with glue and nails, under clamp pressure, which ensures squareness.
7. **Back panel** — Made of 1/2" plywood. Dado joints stapled into cabinet sides, glued and screwed into top and bottom.
8. **End panel** — 1/2" plywood substrate, with light maple woodgrain laminate interior. Matching exterior.
9. **Drawers** — 5/8 " solid wood Dovetail sides 3/8" thick bottom
10. **Hinges —** Heavy duty steel concealed hinge, adjustable with soft-close mechanism.
11. **Glides** — 3/4 extension, high quality soft-close under mounted glides.
12. **Shelves** — 3/4" thick, plywood; fully adjustable. (10" deep)
13. **Toe kick** — 4½" Toe kick with 3" inset on all standard base and vanity cabinets.

* All modifications require cabinets to be assembled.

Glencove

Full Overlay
1/4" Reveal

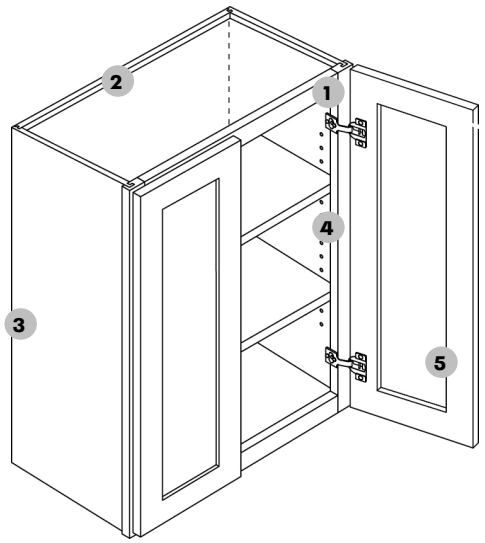

1. **Frame** — 3/4" thick Solid Wood, 1½" wide, kiln-dried solid hardwood. Assembled with glue and nails, under clamp pressure, which ensures squareness.
2. **Back panel** — Made of 1/2" plywood. Dado joints stapled into cabinet sides, glued and screwed into top and bottom.
3. **End panel** — Top and bottom 1/2" plywood substrate, with light maple woodgrain laminate interior. Matching exterior.
4. **Shelves** — 3/4" thick, plywood; fully adjustable.
5. **Hinges —** Heavy duty steel concealed hinge, adjustable with soft-close mechanism.

   *36" and 42" Wall cabinets will have 3 hinges

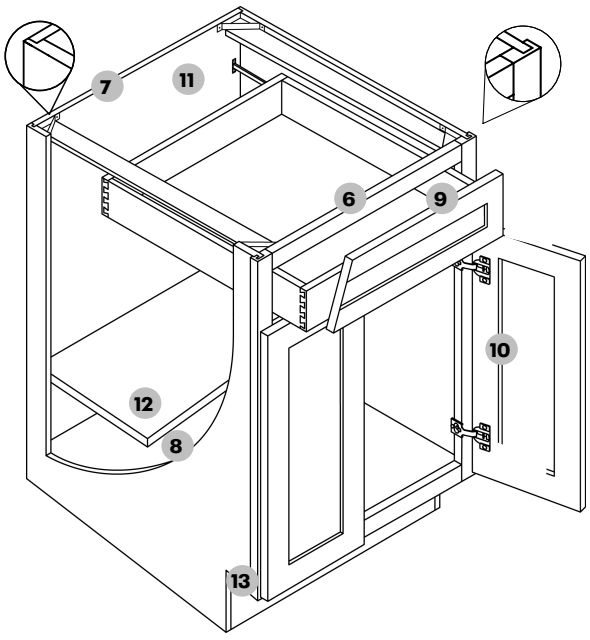

6. **Base frame** — 3/4" thick Solid Wood, 1½" wide, kiln-dried solid hardwood. Assembled with glue and nails, under clamp pressure, which ensures squareness.
7. **Back panel** — Made of 1/2" plywood. Dado joints stapled into cabinet sides, glued and screwed into top and bottom.
8. **End panel** — 1/2" plywood substrate, with light maple woodgrain laminate interior. Matching exterior.
9. **Drawers** — 5/8 " solid wood Dovetail sides 3/8" thick bottom.
10. **Hinges —** Heavy duty steel concealed hinge, adjustable with soft-close mechanism.
11. **Glides** — Full extension, high quality soft-close under mounted glides.
12. **Shelves** — 3/4" thick, plywood; fully adjustable. (10" deep)
13. **Toe kick** — 4½" Toe kick with 3" inset on all standard base and vanity cabinets.

Luxor

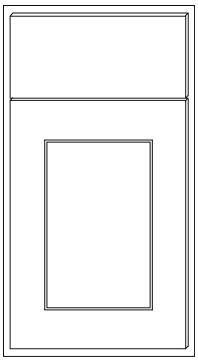

A semi-full overlay with ½″ reveal, 2 ½″ wide shaker style MDF door and center panel, Mortise and Tenon construction, slab drawer front.

Finish	Price Code (Slab)	Price Code (5 Panel)
L02 - Smoky Grey (stain) (Birch/Hardwood door)	L	Z
L03-Misty Grey (paint) (MDF door)	L	Z
L05-Harvest (stain) (Hardwood door)	L	Z
L10-White (paint) (MDF door)	L	Z
L11-Espresso (stain) (Birch/Hardwood door)	L	Z

- Glass doors are available for wall and base cabinets
- Birch Frame
- Stain finishes have a MDF veneer center panel

Glencove

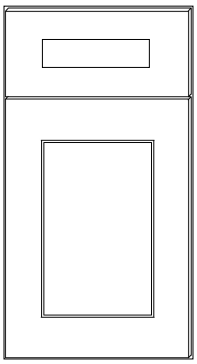

A full overlay with ¼″ reveal, shaker style MDF door and center panel, Mortise and Tenon construction, 5 piece drawer front.

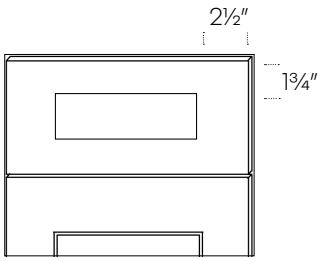

Finish	Price Code
G01 -Sleek White (paint) (MDF door)	T
G07 - Saddle (stain) (Birch/Hardwood door)	T
G10 - White (paint) (MDF door)	T

- Glass doors are available for wall and base cabinets
- Birch Frame
- Stain finishes have a MDF veneer center panel

Specifications & Pricing

12" High Wall Cabinet

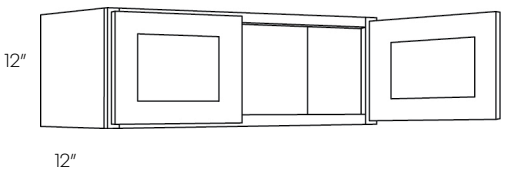

Item Number	L	T
3012	381	420
3312	395	435
3612	429	472
3912	463	510

• No Shelf

12" High, 24" Deep Wall Cabinet

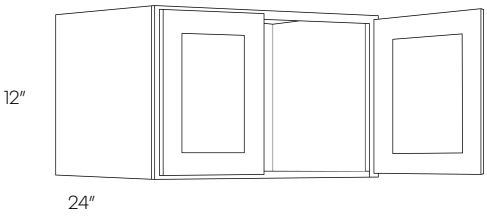

3612X24	572	630
3912X24	617	679

• No Shelf

15" High Wall Cabinet

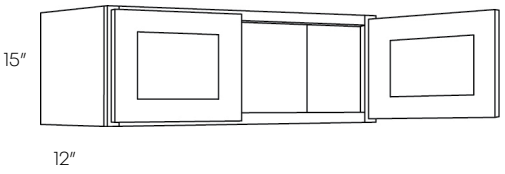

2415	376	414
3015	387	426
3315	404	445
3615	429	472
3915	473	521

• No Shelf

15" High, 24" Deep Wall Cabinet

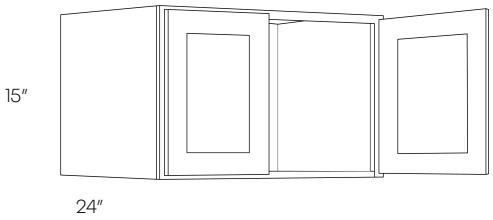

Item Number	L	T
3015X24	520	572
3615X24	579	637
3915X24	636	700

• No Shelf

18" High Wall Cabinet

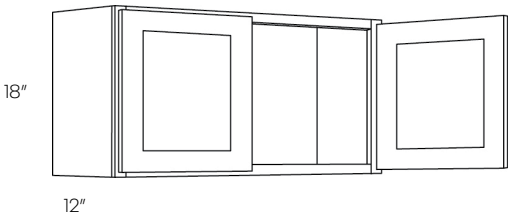

2118 (1 Door)	357	393
2418	376	414
2718	384	423
3018	393	433
3318	426	469
3618	488	537
3918	546	601

• No Shelf

18" High, 24" Deep Wall Cabinet

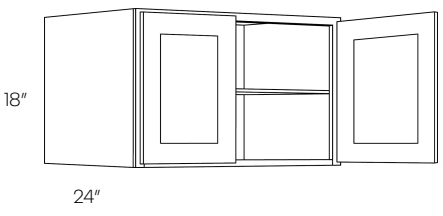

3018X24	579	637
3318X24	638	702
3618X24	652	718
3918X24	665	732

24″ High Wall Cabinet

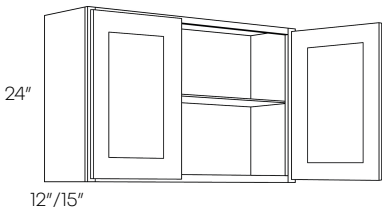

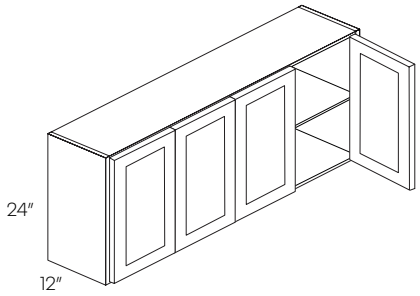

4824

Item Number	L	T
1824 (1 Door)	401	442
2424	516	568
2724	529	582
3024	540	594
3024X15	549	N/A
3324	575	633
3624	618	680
3924	675	743
4224	735	809
4824 (4 Door)	821	904

• Has One Shelf

24″ High, 24″ Deep Wall Cabinet

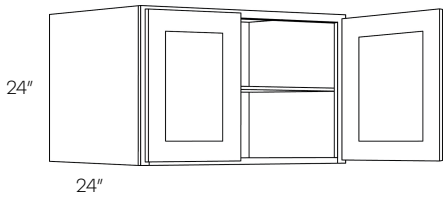

3024X24	722	795
3324X24	778	856
3624x24	834	918
3924x24	918	1010

• Has One Shelf

30″ High 1 Door Wall Cabinet

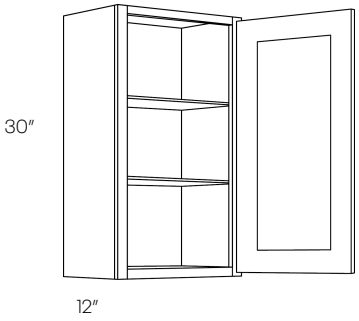

930	306	337
1230	341	376
1530	368	405
1830	414	456
2130	495	545

30″ High 2 Door Wall Cabinet

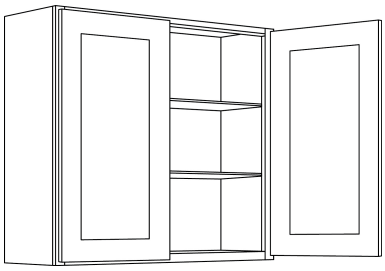

30″ High 4 Door Wall Cabinet

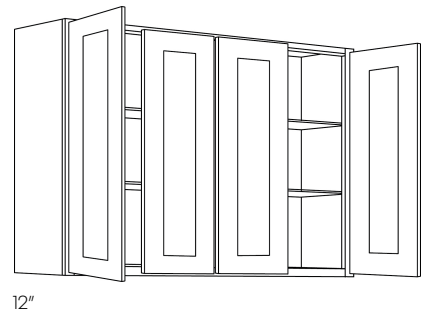

30″ High Open Wall Cabinet

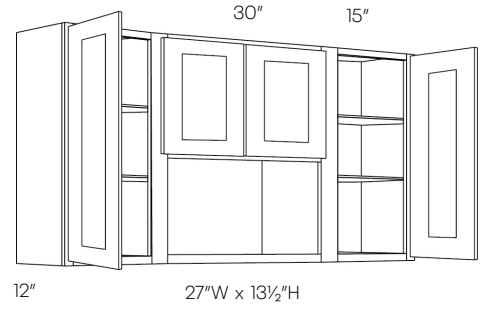

Item Number	L	T
2430	528	581
2730	581	640
3030	596	656
3330	647	712
3630	689	758
3930	743	818
4230	790	870
4830	894	984
5430	999	N/A
6030-O	1021	N/A

• Opening Natural Interior Finish

30″ High Blind Wall Cabinet

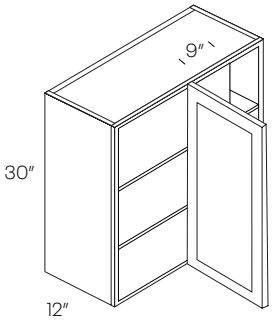

BLW27/BLW36

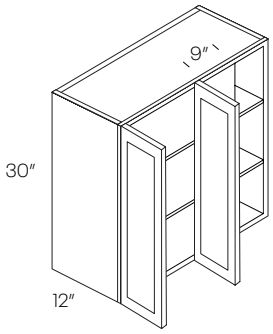

BLW42/BLW45

Item Number	L	T
BLW27/3030	751	827
BLW30/3330	824	907
BLW36/3930	897	987
BLW42/4530	1076	1184
BLW45/4830	1125	1238

- Reversible Left or Right
- Can be installed at actual size

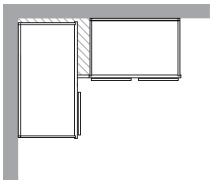

Cabinet	Min. Pull	Max. Pull	Actual Size	Door(s)	Door Opening
BLW27/3030	27″	30″	27″	1230	9″ X 27″
BLW30/3330	30″	33″	30″	1530	12″ X 27″
BLW36/3930	36″	39″	36″	2130	18″ X 27″
BLW42/4530	42″	45″	42″	2730	24″ X 27″
BLW45/4830	45″	48″	45″	3030	27″ X 27″

30″ High Diagonal Corner Wall Cabinet

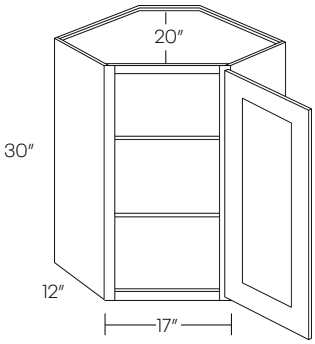

CW2430	769	846

- Requires 24″x24″ wall space

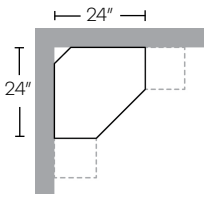

30″ High Corner Wall Cabinet

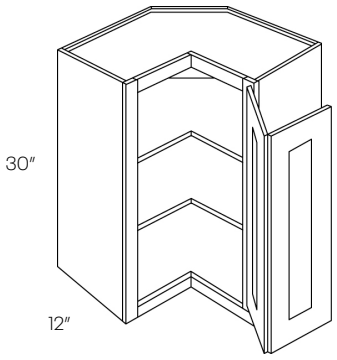

- Requires 24″ X 24″ wall space
- Pie is 12″ X 12″

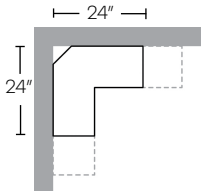

Item Number	L	T
WSQ2430	885	974

36″ High 1 Door Wall Cabinet

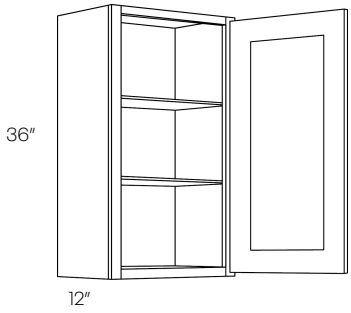

936	349	384
1236	387	426
1536	418	460
1836	471	519
2136	562	619

36″ High 2 Door Wall Cabinet

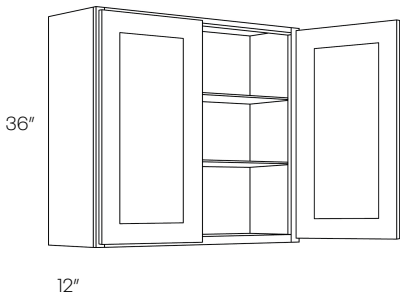

2436	602	663
2736	660	727
3036	680	749
3336	740	815
3636	786	865
4236	897	987

36″ High Blind Wall Cabinet

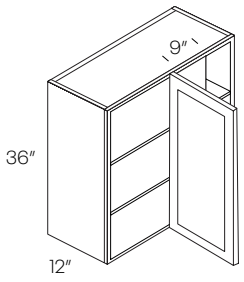

BLW27/BLW36

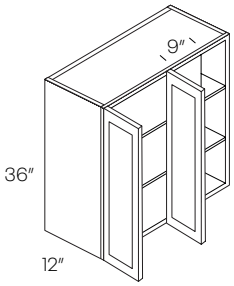

BLW42

Item Number	L	T
BLW27/3036	854	940
BLW30/3336	940	1034
BLW36/3936	1025	1128
BLW42/4536	1111	1223

- Reversible Left or Right
- Can be installed at actual size

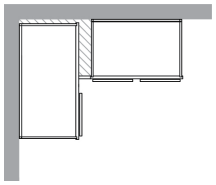

Cabinet	Min. Pull	Max. Pull	Actual Size	Door(s)	Door Opening
BLW27/3036	27″	30″	27″	1236	9″ X 33″
BLW30/3336	30″	33″	30″	1536	12″ X 33″
BLW36/3936	36″	39″	36″	2136	18″ X 33″
BLW42/4536	42″	45″	42″	2736	24″ X 33″

36″ High Diagonal Corner Wall Cabinet

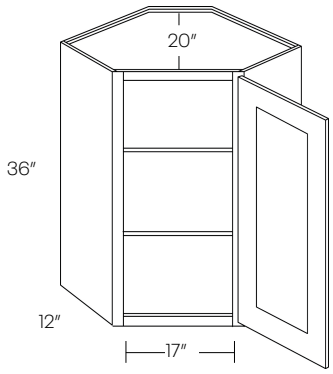

CW2436	878	966

- Requires 24″x24″ wall space

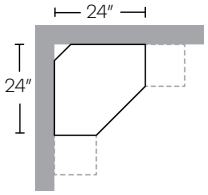

36″ High Corner Wall Cabinet

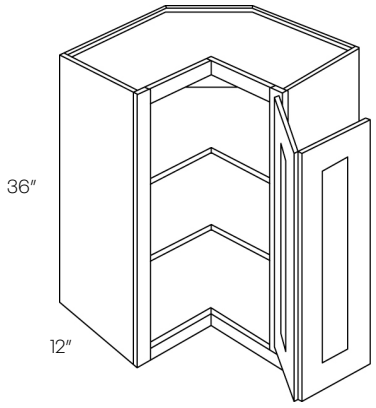

- Requires 24″ X 24″ wall space
- Pie is 12″ X 12″

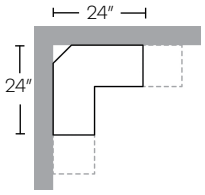

Item Number	L	T
WSQ2436	931	1025

42″ High 1 Door Wall Cabinet

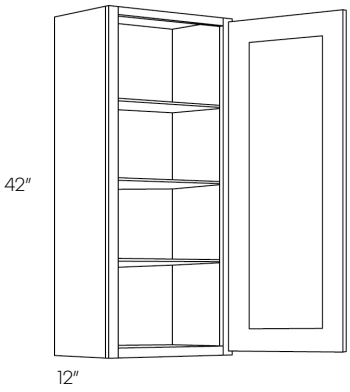

942	412	454
1242	446	491
1542	493	543
1842	548	603
2142	653	719

42″ High 2 Door Wall Cabinet

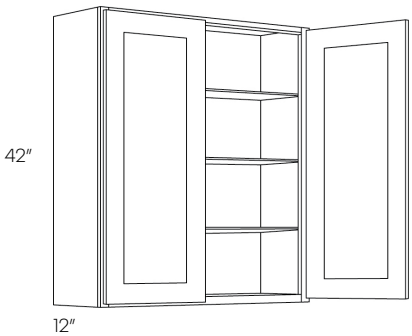

2442	700	771
2742	771	849
3042	799	879
3342	859	945
3642	912	1004
4242	1058	1164

42″ High Blind Wall Cabinet

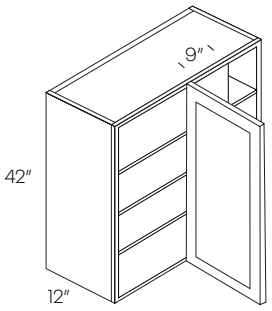

BLW27/BLW36

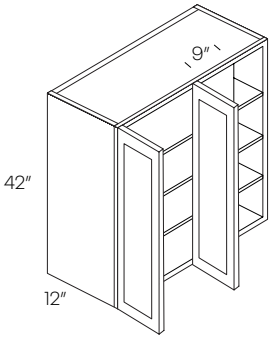

BLW42

Item Number	L	T
BLW27/3042	969	1066
BLW30/3342	1067	1174
BLW36/3942	1165	1282
BLW42/4542	1263	

- Reversible Left or Right
- Can be installed at actual size

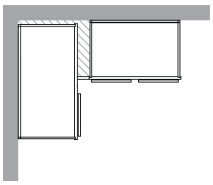

Cabinet	Min. Pull	Max. Pull	Actual Size	Door(s)	Door Opening
BLW27/3042	27″	30″	27″	1242	9″ X 39″
BLW30/3342	30″	33″	30″	1542	12″ X 39″
BLW36/3942	36″	39″	36″	2142	18″ X 39″
BLW42/4542	42″	45″	42″	2742	24″ X 39″

42″ High Diagonal Corner Wall Cabinet

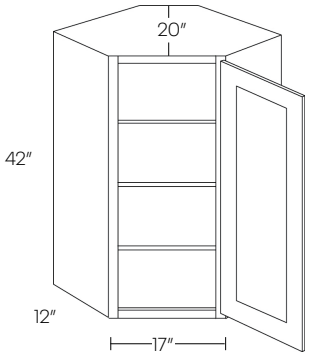

CW2442	999	1099

- Requires 24″x24″ wall space

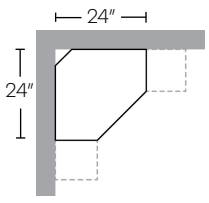

42″ High Corner Wall Cabinet

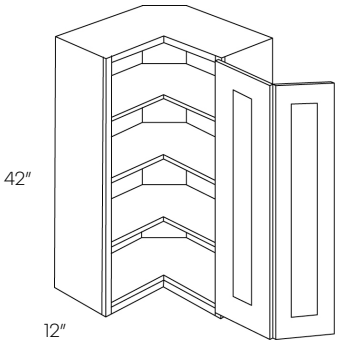

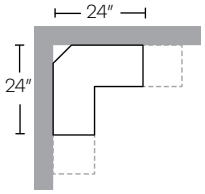

- Requires 24″ X 24″
- Pie is 12″ X 12″

Item Number	L	T
WSQ2442	1155	1271

Single Door Wall End Cabinet

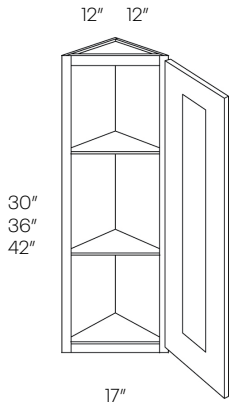

- 42″ has 3 shelves

WEC1230	359	395
WEC1236	409	450
WEC1242	455	501

Microwave Cabinet Shelf

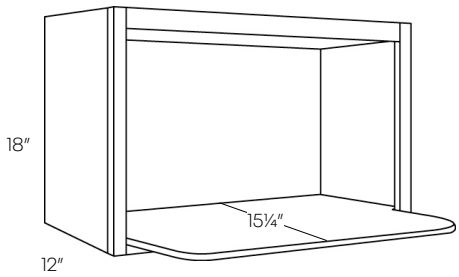

- Opening 27″ X 14¼″
- Shelf ships loose
- Depth of the shelf may be cut-down field
- Finished Interior

MW3018	518	570

1 Door Base Cabinet

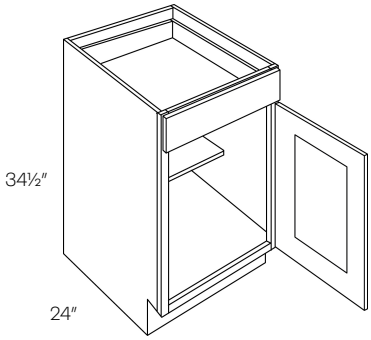

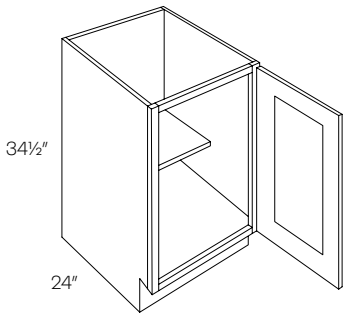

Full Height

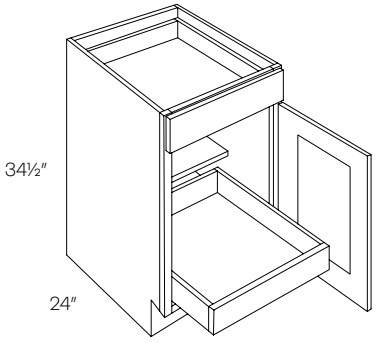

1 POS

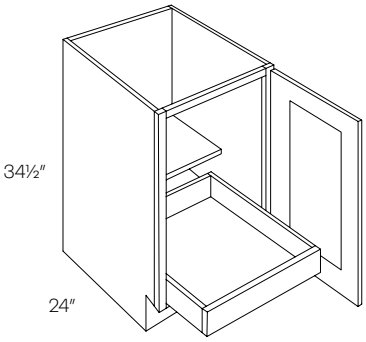

Full Height W/ 1 POS

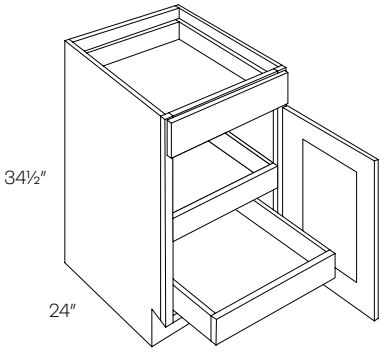

2 POS

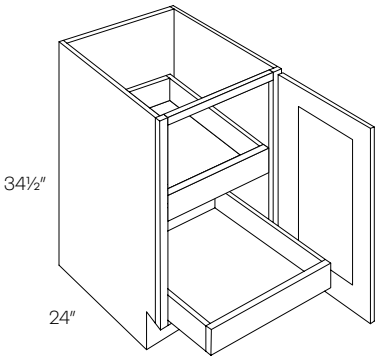

Full Height W/ 2 POS

Item Number	L	T	Z
B9	446	491	458
B12	513	565	526
B15	537	591	551
B18	564	621	579
B21	643	708	660
B9-FH	446	491	N/A
B12-FH	513	565	N/A
B15-FH	537	591	N/A
B18-FH	564	621	N/A
B21-FH	643	708	N/A
B12-POS1	777	888	796
B15-POS1	808	924	828
B18-POS1	855	978	876
B21-POS1	938	1078	961
B12-FH-POS1	777	888	N/A
B15-FH-POS1	808	924	N/A
B18-FH-POS1	855	978	N/A
B21-FH-POS1	938	1078	N/A
B12-POS2	987	1211	1012
B15-POS2	1028	1257	1054
B18-POS2	1101	1335	1129
B21-POS2	1195	1448	1225
B12-FH-POS2	987	1211	N/A
B15-FH-POS2	1028	1257	N/A
B18-FH-POS2	1101	1335	N/A
B21-FH-POS2	1195	1448	N/A

• 10″ Deep Shelf

*Luxor full height doors will have a larger reveal on the bottom and will not align with other base cabinets

1 Drawer 2 Door Base Cabinet

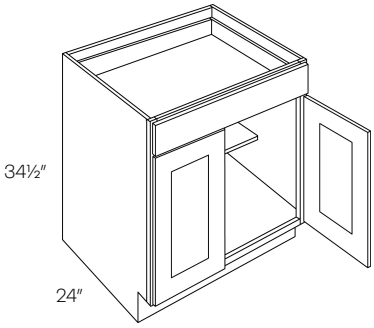

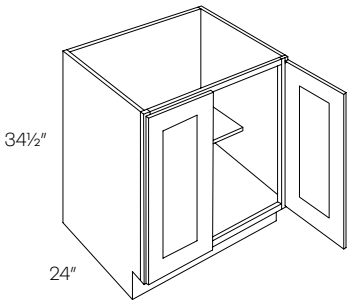

Full Heightt

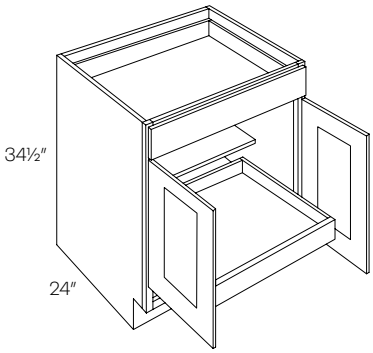

1 POS

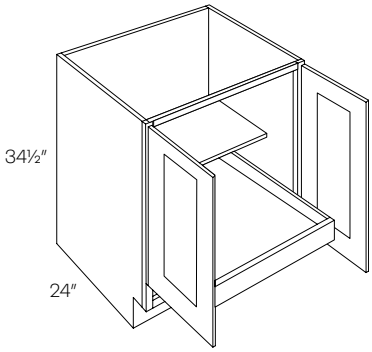

Full Height W/ 1 POS

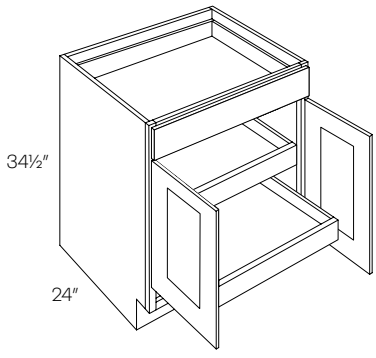

2 POS

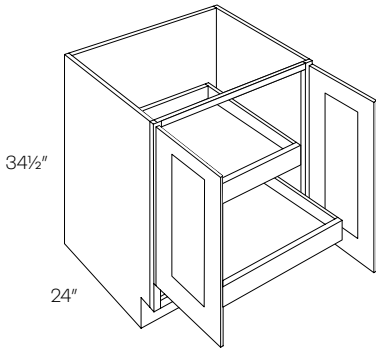

Full Height W/ 2 POS

Item Number	L	T	Z
B24	719	791	737
B27	795	875	815
B24-FH	719	791	N/A
B27-FH	795	875	N/A
B24-POS1	1059	1196	1085
B27-POS1	1136	1293	1164
B24-FH-POS1	1059	1196	N/A
B27-FH-POS1	1136	1293	N/A
B24-POS2	1362	1601	1396
B27-POS2	1453	1711	1489
B24-FH-POS2	1362	1601	N/A
B27-FH-POS2	1453	1711	N/A

• 10″ Deep Shelf

*Luxor full height doors will have a larger reveal on the bottom and will not align with other base cabinets

2 Drawer 2 Door Base Cabinet

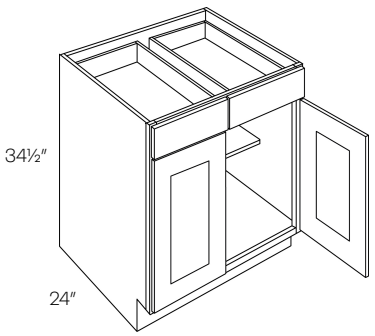

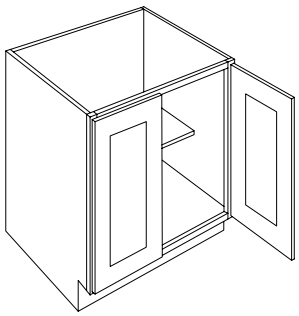

Full Height

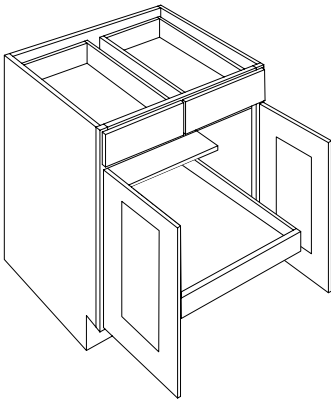

1 POS

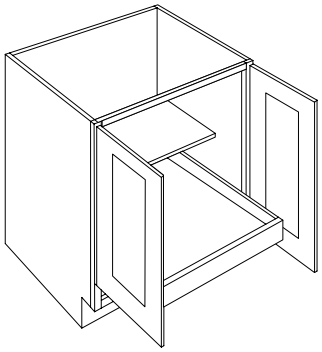

Full Height W/1 POS

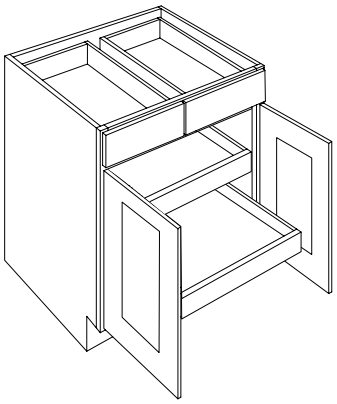

2 POS

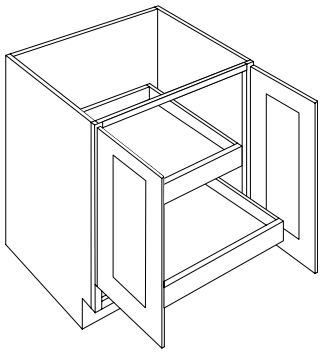

Full Height W/2 POS

Item Number	L	T	Z
B30	866	953	888
B33	924	1017	948
B36	969	1066	994
B39	1031	1135	1057
B42	1086	1195	1114
B30-FH	866	953	N/A
B33-FH	924	1017	N/A
B36-FH	969	1066	N/A
B39-FH	1031	1135	1057
B42-FH	1086	1195	N/A
B30-POS1	1216	1384	1246
B33-POS1	1238	1463	1315
B36-POS1	1310	1537	1343
B42-POS1	1622	1684	1663
B30-FH-POS1	1216	1384	N/A
B33-FH-POS1	1238	1463	N/A
B36-FH-POS1	1310	1537	N/A
B42-FH-POS1	1622	1684	N/A
B30-POS2	1548	1815	1587
B33-POS2	1629	1909	1670
B36-POS2	1757	2008	1801
B42-POS2	2279	2173	2336
B30-FH-POS2	1548	1815	N/A
B33-FH-POS2	1629	1909	N/A
B36-FH-POS2	1757	2008	N/A
B42-FH-POS2	2279	2173	N/A

- 10″ Deep Shelf

*Luxor full height doors will have a larger reveal on the bottom and will not align with other base cabinets

2 Drawer 4 Door Base Cabinet

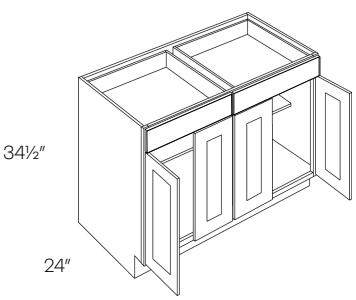

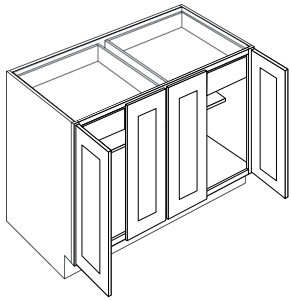

Full Height

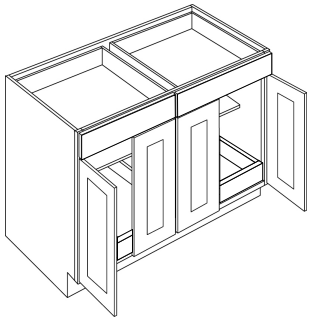

2 POS

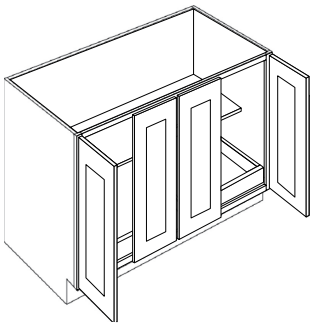

Full Height W/2 POS

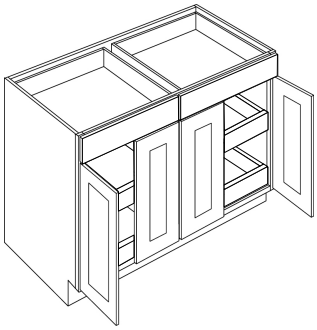

4 POS

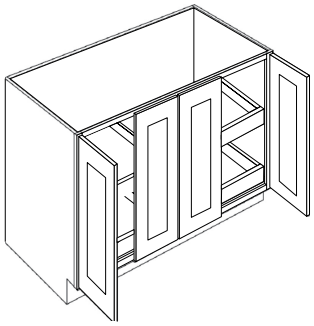

Full Height W/4 POS

Item Number	L	T	Z
B48	1204	1325	1235
B48-FH	1204	1325	N/A
B48-POS2	1785	2545	1830
B48-FH-POS2	1785	2545	N/A
B48-POS4	2501	3765	2564
B48-FH-POS4	2501	3765	N/A

- 10″ Deep Shelf
- *Luxor full height doors will have a larger reveal on the bottom and will not align with other base cabinets

Blind Base Cabinet

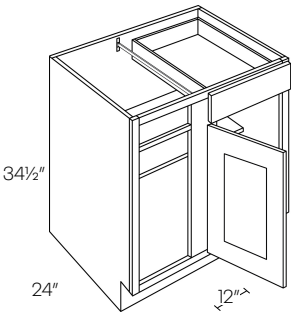

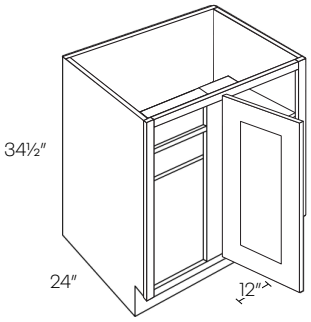

Full Height

Item Number	L	T	Z
BLB36/39	916	1008	939
BLB39/42	945	1040	969
BLB42/45	1011	1113	1037
BLB45/48	1082	1191	1110
BLB48/51	1165	1282	1195
BLB36/39-FH	916	1008	N/A
BLB39/42-FH	945	1040	N/A
BLB42/45-FH	1011	1113	N/A
BLB45/48-FH	1082	1191	N/A
BLB48/51-FH	1165	1282	N/A

- Order Left or Right
- Reversible Left or Right
- Must be pulled to the minimum position

* Left blind shown

*Luxor full height doors will have a larger reveal on the bottom and will not align with other base cabinets

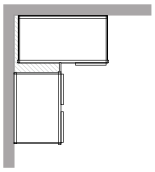

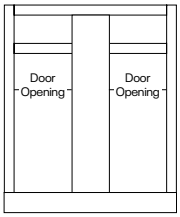

Cabinet	Min. Pull	Max. Pull	Actual Size	Door	Door Opening
BLB36/39	36″	39″	27″	B9	6″
BLB39/42	39″	42″	33″	B12	9″
BLB42/45	42″	45″	39″	B15	12″
BLB45/48	45″	48″	45″	B18	15″
BLB48/51	48″	51″	48″	B39	18″

3 Drawer Base Cabinet

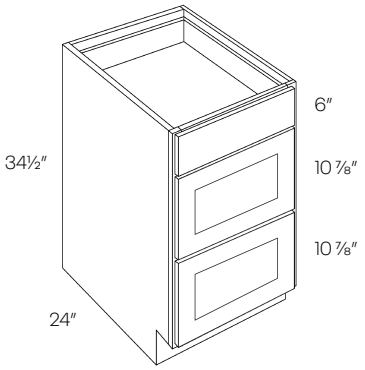

Item Number	L	T	Z
DB12	794	874	814
DB15	831	915	852
DB18	857	943	879
DB21	889	978	912
DB24	920	1013	943
DB27	944	1039	968
DB30	1005	1106	1031
DB36	1086	1195	1114

Diagonal Corner Sink Front

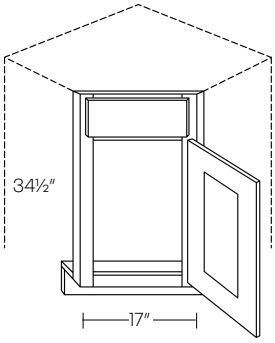

CSF36R*	368	368	368
CSF36L*	368	368	368
CSFFL36 (Floor)	173	173	173

*Requires 36″ x 36″ wall space.
*Requires Floor (sold separately)

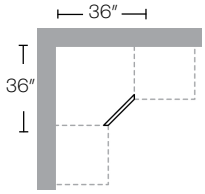

Easy Reach Corner Base Cabinet

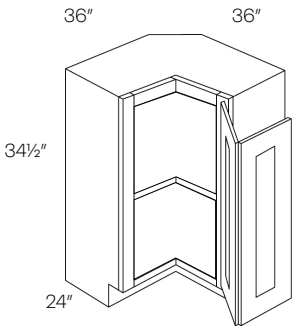

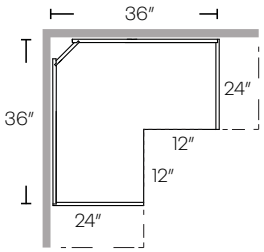

Lazy Susan

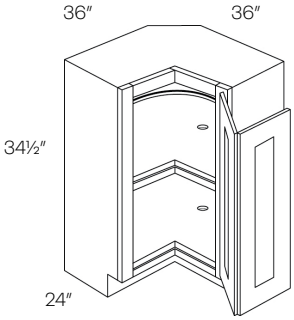

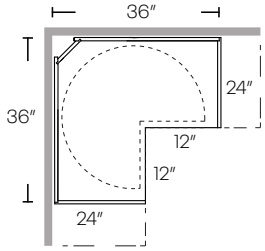

Carousel Corner Base Cabinet

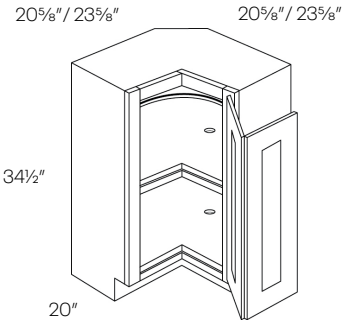

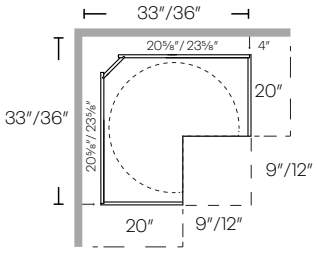

Item Number	L	T	Z
ER36R	1389	1528	N/A
ER36L	1389	1528	N/A
LS36R	1488	1637	N/A
LS36L	1488	1637	N/A
CAR33R	1488	1637	N/A
CAR33L	1488	1637	N/A
CAR36R	1488	N/A	N/A
CAR36L	1488	N/A	N/A

- Requires 33″ x 33″ / 36″ x36″ wall space
- Pie cut for 33″ is 9″ and for 36″ is 12″
- Wooden Lazy Susan

Microwave Base Cabinet

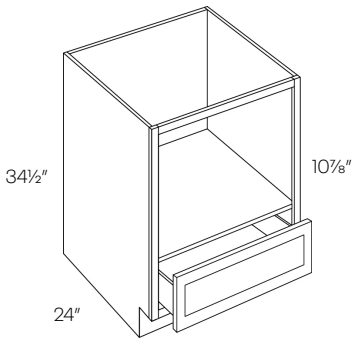

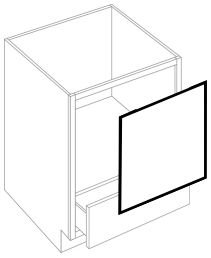

Trim Kit (TRM)

Item Number	L	T	Z
MCB24	675	743	N/A
MCB24-TRM	282	282	N/A
MCB27	726	799	N/A
MCB27-TRM	310	310	N/A
MCB30	771	849	N/A
MCB30-TRM	338	338	N/A

- MC front opening:
  MCB24 - 21″x16″
  MCB27 - 24″x16″
  MCB30 - 27″x16″

*Does not have finished interior

Diagonal Corner Sink Base Cabinet

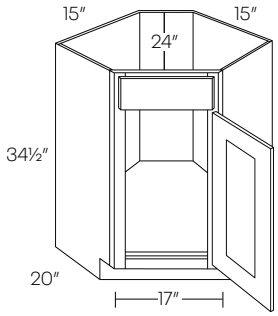

CSB36R	1389	1528	1424
CSB36L	1389	1528	1424

- Requires 36″ x 36″ wall space

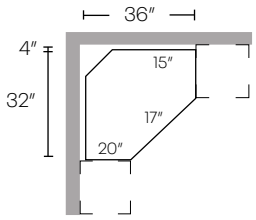

1 Drawer Front 1 Door Sink Base

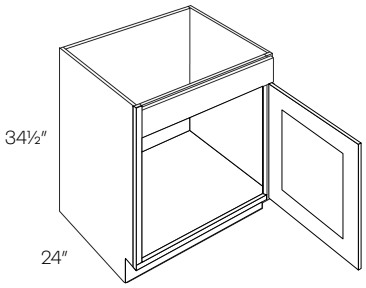

SB21DL	643	708	660
SB21DR	643	708	660

1 Drawer Front 2 Door Sink Base

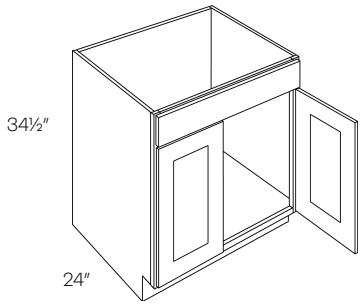

Item Number	L	T	Z
SB24	678	746	695
SB27	728	801	747

2 Drawer 4 Door Sink Base Cabinet

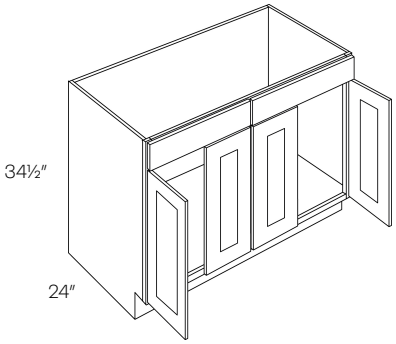

SB48	986	1085	1011

•Removable shipping brace

Combination Sink Base Cabinet

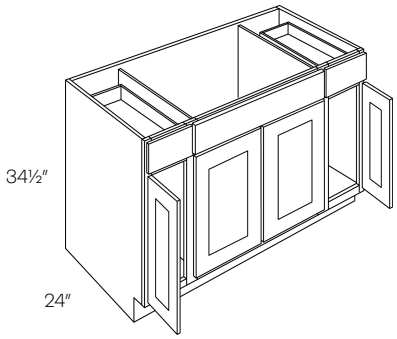

SB54	1100	N/A	1128
SB60	1197	N/A	1227

	Door	Sink	Door
SB54	12″	30″	12″
SB60	15″	30″	15″

2 Drawer Front 2 Door Sink Base

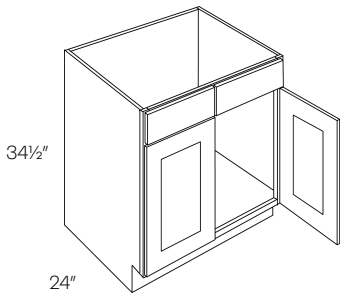

Item Number	L	T	Z
SB30	771	849	791
SB33	817	899	838
SB36	837	921	858
SB39	858	944	880
SB42	877	965	899

Double Door Farm Sink Base Cabinet

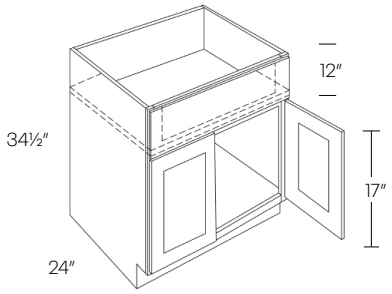

SB36 - FS	851	936	N/A

- Max trimmable 33″ X 10″
- Trimming to be done in field
- Has a fixed platform

Angle Base End Cabinet

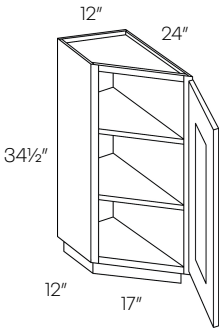

BTC2412	509	560	N/A

- Reversible
- Loose toe kick
- Hinged on 24″

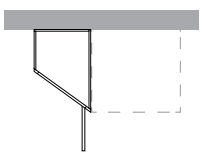

Base End Cabinet

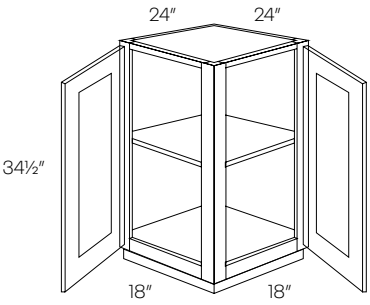

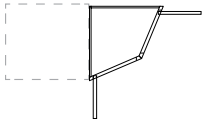

Item Number	L	T	Z
BEC24	634	698	N/A

Waste Basket Cabinet

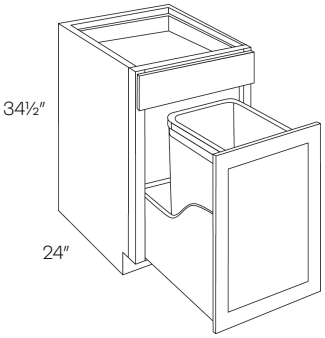

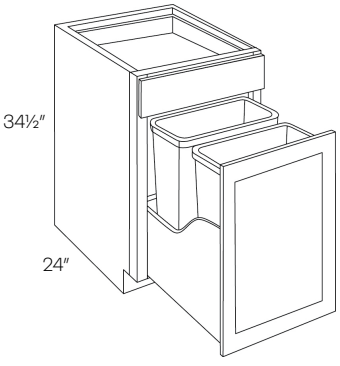

BWBK15 (1-B)	1030	1133	1056
BWBK18 (2-B)	1140	1254	1169

- Includes 35qt. waste basket (BK18 gets 2) and soft-close glides
- Cabinet can be reduced to 21″

Full Height Waste Basket Cabinet

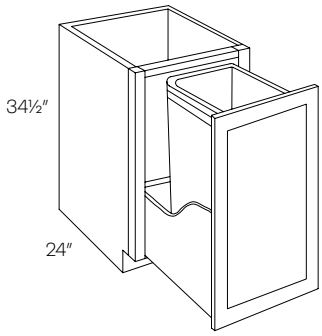

BWBK15

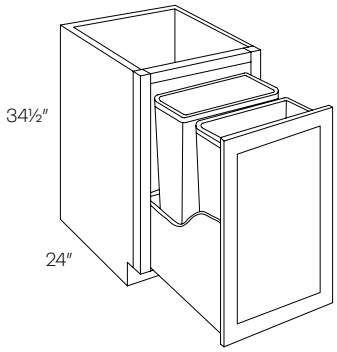

BWBK18

Item Number	L	T	Z
BWBK15-FH (1-B)	1030	1133	N/A
BWBK18-FH (2-B)	1140	1254	N/A

- Includes 35qt. waste basket (BK18 gets 2) and soft-close glides
- Cabinet can be reduced to 21″

Base Spice Cabinet

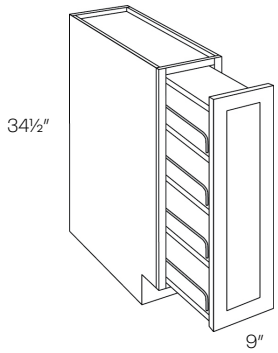

BSP9	816	898	N/A

1 Door Base Cabinet

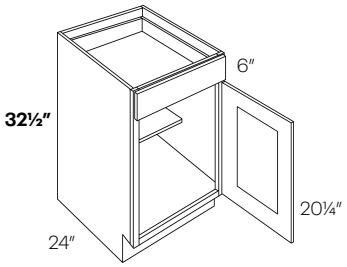

Item Number	L	T	Z
B9-HA	446	N/A	458
B12-HA	513	N/A	526
B15-HA	537	N/A	551
B18-HA	564	N/A	579
B21-HA	643	N/A	660

•10″ Deep Shelf
* Please note: Handicap Accessible cabinets may not meet ADA requirements

1 Drawer 2 Door Base Cabinet

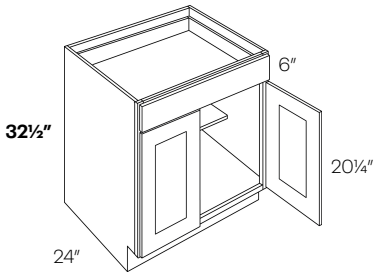

B24-HA	719	N/A	737
B27-HA	795	N/A	815

•10″ Deep Shelf
* Please note: Handicap Accessible cabinets may not meet ADA requirements

2 Drawer 2 Door Base Cabinet

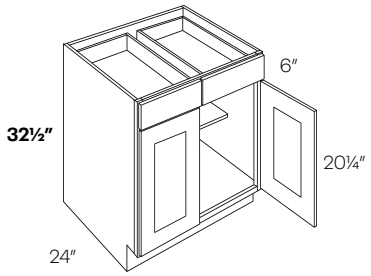

B30-HA	866	N/A	888
B33-HA	924	N/A	948
B36-HA	969	N/A	994
B39-HA	1031	N/A	1057

•10″ Deep Shelf
* Please note: Handicap Accessible cabinets may not meet ADA requirements

3 Drawer Base Cabinet

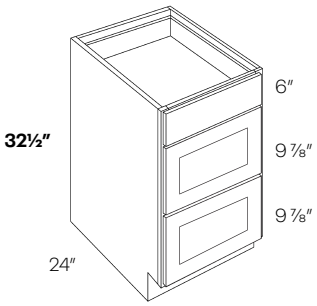

Item Number	L	T	Z
DB12-HA	794	N/A	814
DB15-HA	831	N/A	852
DB18-HA	857	N/A	879

* Please note: Handicap Accessible cabinets may not meet ADA requirements

Blind Base Cabinet

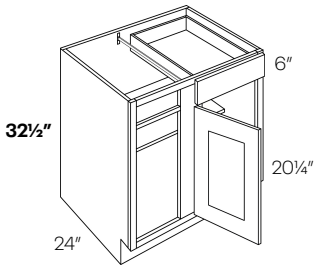

BLB36/39-HA	N/A	N/A	N/A		

- Left blind shown
- Reversible Left or Right
- Must be pulled to the minimum position

* Please note: Handicap Accessible cabinets may not meet ADA requirements

	Min Pull	Max Pull	Actual	Door	Door Opening
BLB36/39	36″	39″	27″	B9	6″

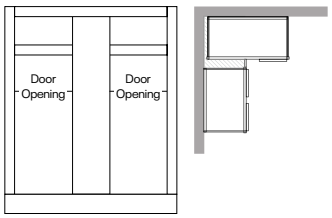

Carousel Corner Base Cabinet

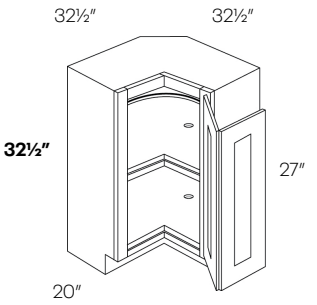

CAR36L-HA	1488	N/A	N/A
CAR36R-HA	1488	N/A	N/A

- Requires 36″ x 36″ wall space

* Please note: Handicap Accessible cabinets may not meet ADA requirements

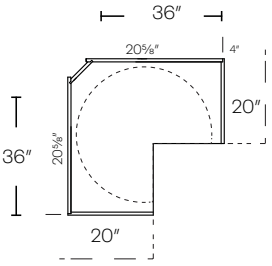

Removable Sink Insert

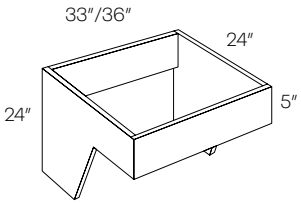

Item Number	L	T	Z
SB30-HR-INS	507	N/A	N/A
SB33-HR-INS	563	N/A	N/A
SB36-HR-INS	619	N/A	N/A

*HR=Handicap Removable
* Please note: Handicap Removable cabinets may not meet ADA requirements
**Sink insert comes finished

Side profile

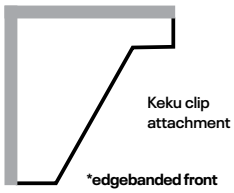

2 Door Removable Sink Base Cabinet

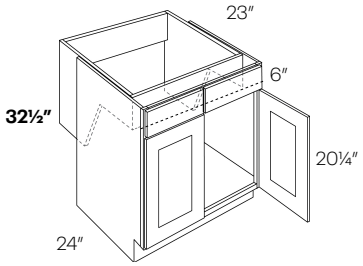

Inserts True Size:
30″ - 28.5″ wide
33″ - 31.5″ wide
36″ - 34.5″ wide

SB30-HR	1080	N/A	1107
SB33-HR	1144	N/A	1173
SB36-HR	1172	N/A	1202

*HR=Handicap Removable
* Please note: Handicap Accessible cabinets may not meet ADA requirements

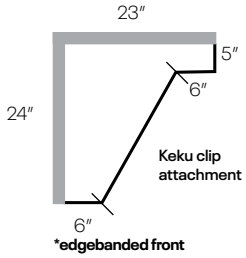

Removable Vanity Base

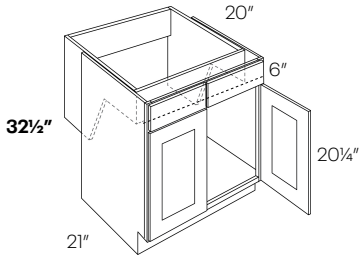

V30-HR	839	N/A	860
V33-HR	1298	N/A	1331
V36-HR	1014	N/A	1039

*HR=Handicap Removable
* Please note: Handicap Accessible cabinets may not meet ADA requirements

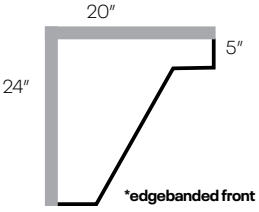

1 Door Vanity Sink Base Cabinet

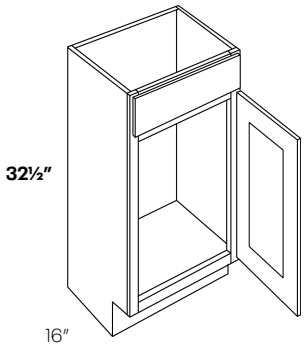

Item Number	L	T	Z
V1816-HA	346	N/A	355

•Available in White only
•HA=Handicap Accessible
* Please note: Handicap Accessible cabinets may not meet ADA requirements

2 Door Vanity Sink Base Cabinet

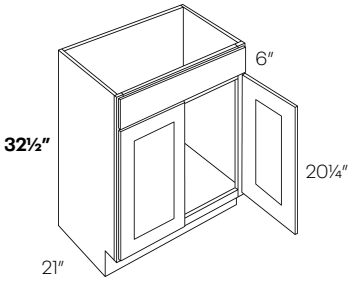

V21-HA*	377	N/A	396
V2418-HA	444	N/A	456
V24-HA	400	N/A	410
V30-HA	599	N/A	614
V36-HA	724	N/A	743

•V21- HA & V2418-HA available in White only
•HA=Handicap Accessible
* Please note: Handicap Accessible cabinets may not meet ADA requirements

Vanity Drawer Base Cabinet - Handicap Accessible

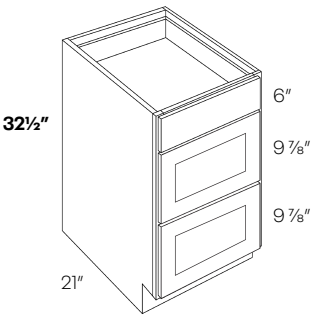

VDB12-HA	787	N/A	807
VDB15-HA	834	N/A	855
VDB18-HA	854	N/A	876

*HA=Handicap Accessible
* Please note: Handicap Accessible cabinets may not meet ADA requirements

Single Door Utility Cabinet

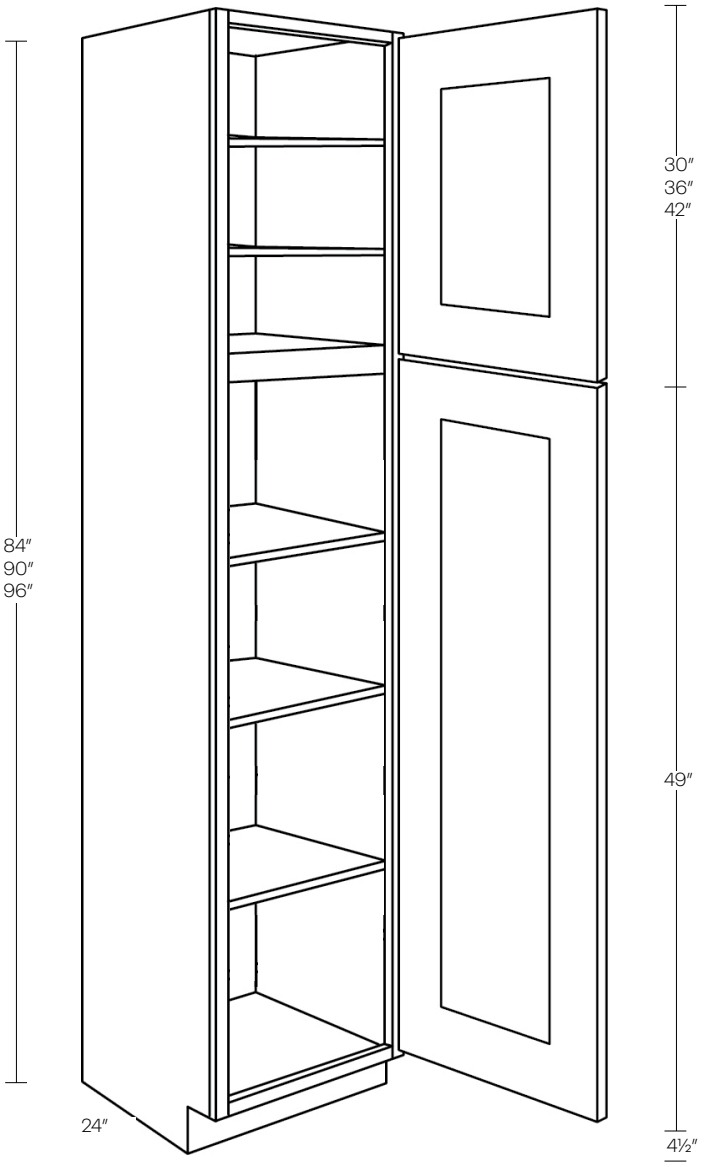

Item Number	L	T
UC1821X84	1712	1884
UC1824X84	1712	1884
UC1824X90	1951	2147
UC1824X96*	2227	2450
POS18-3 (factory installed)	954	954
POS18-4 (factory installed)	1198	1198

- Adjustable shelves
- 84″ and 90″ have 2 upper shelves
- 96″ has 3 upper shelves
- Fixed shelf between doors

Pull Out Shelf

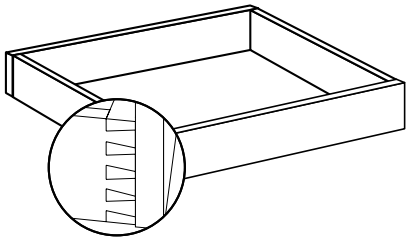

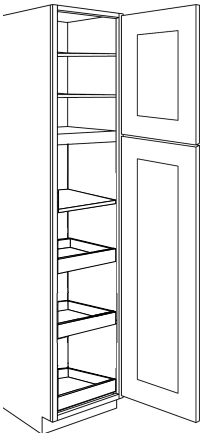

POS-3

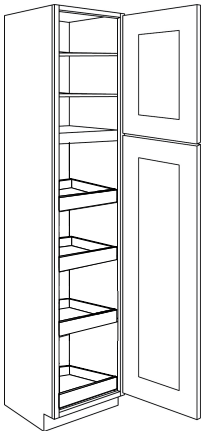

POS-4

Double Door Utility Cabinet

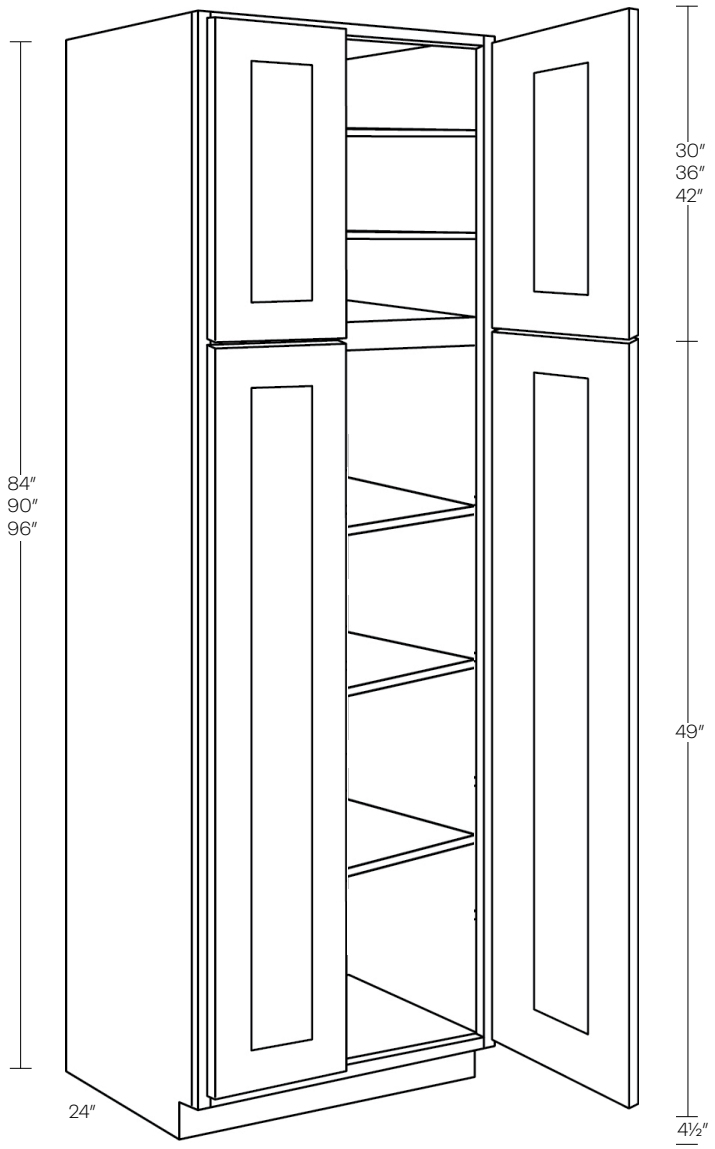

Item Number	L	T
UC2424X84	1971	2169
UC2424X90	2250	2475
UC2424X96*	2489	2738
UC3024X84	2070	2277
UC3024X90	2363	2600
UC3024X96*	2614	2876
POS24-3 (factory installed)	1088	1088
POS24-4 (factory installed)	1377	1377
POS30-3 (factory installed)	1100	1100
POS30-4 (factory installed)	1389	1389

- Adjustable shelves
- 84″ and 90″ have 2 upper shelves
- 96″ has 3 upper shelves
- Fixed shelf between doors

Pull Out Shelf

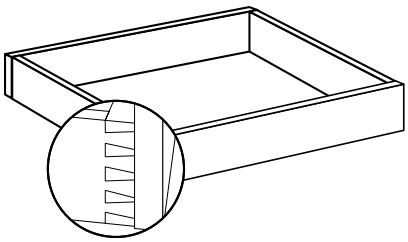

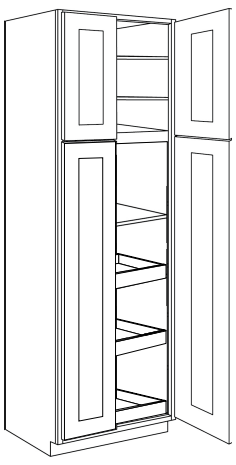

POS-3

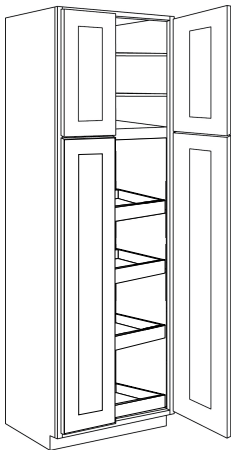

POS-4

Double Door Oven Cabinet

Item Number	L	T	Z
OV3084	1861	2048	N/A
OV3090	2142	2357	N/A
OV3096*	2423	2666	N/A
OV3384	1902	2093	N/A
OV3390	2185	2404	N/A
OV3396	2463	2710	N/A

- For double ovens, remove drawer floor as needed
- Trim kit included
- Trim kit is 3/4″ thick and includes solid edgeband
- 84″ and 90″ has 1 upper shelf
- 96″ has 2 upper shelves

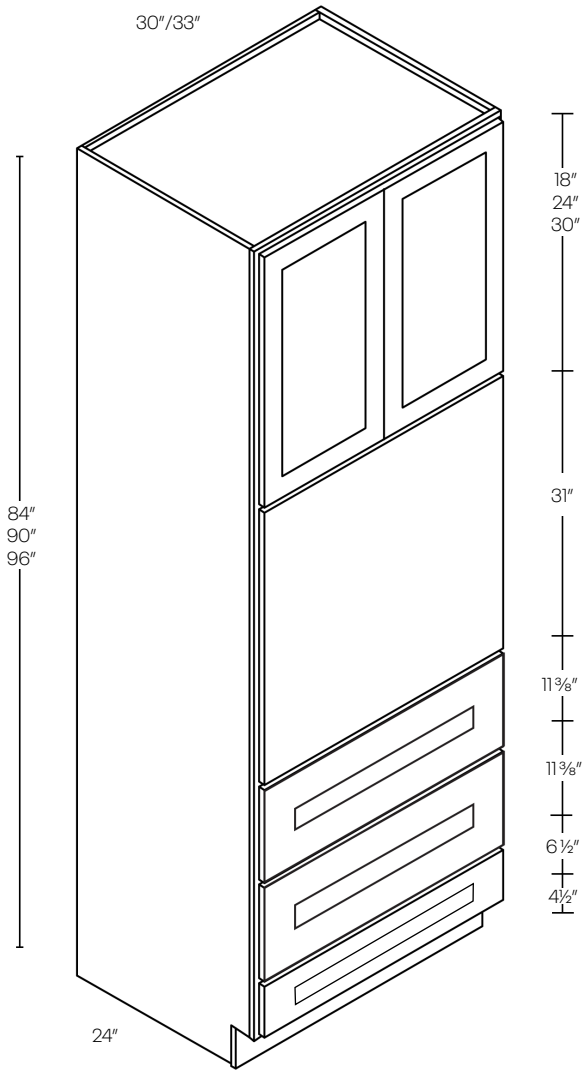

Side - Field Modified
*for double oven, remove fixed shelf and bottom two 12″ drawers in field

Assembly

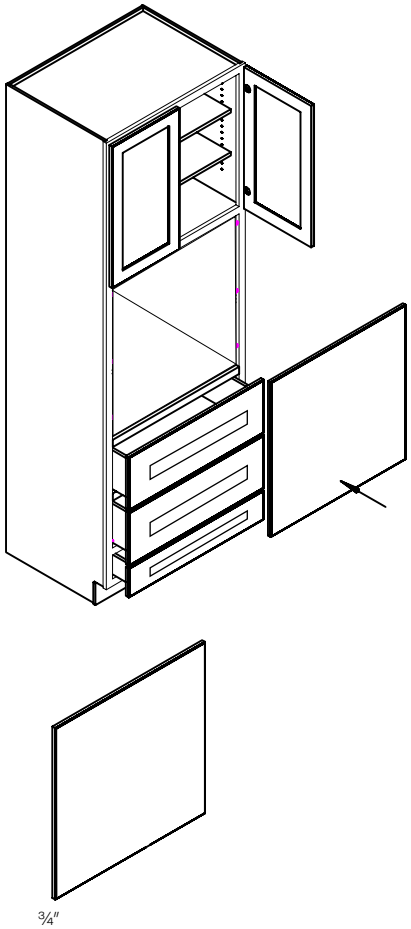

Side

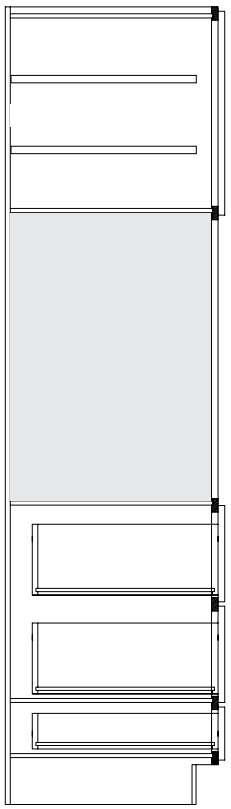

Double Oven Cabinet

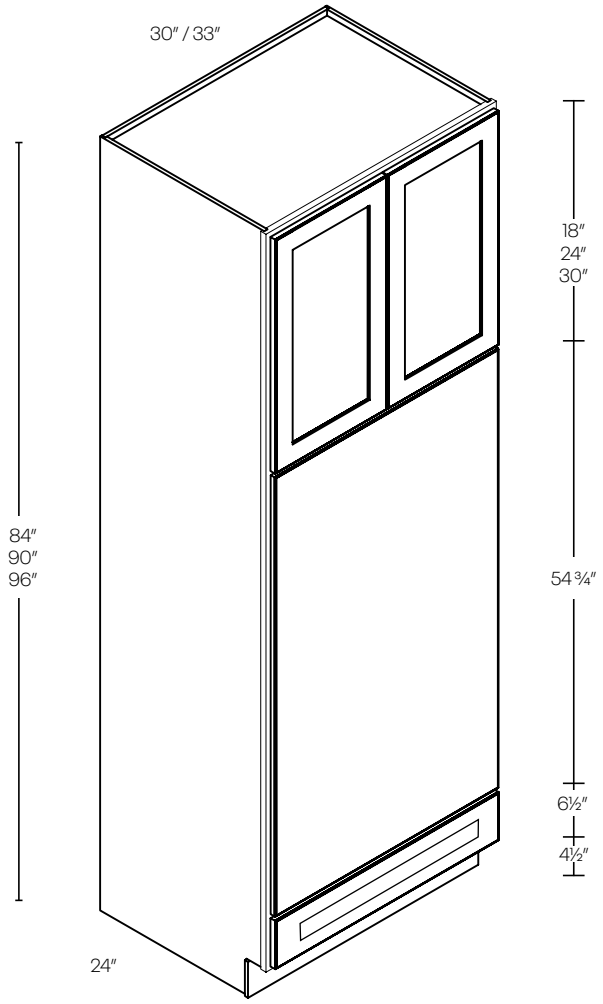

Item Number	L	T	Z
OVD3084	1794	1974	N/A
OVD3090	2072	2280	N/A
OVD3096*	2353	2589	N/A
OVD3384	1902	2093	N/A
OVD3390	2185	2404	N/A
OVD3396*	2473	2721	N/A

- Trim kit included
- Trim kit is 3/4″ thick and includes solid edgeband
- 84″ and 90″ has 1 upper shelf
- 96″ has 2 upper shelves

Assembly

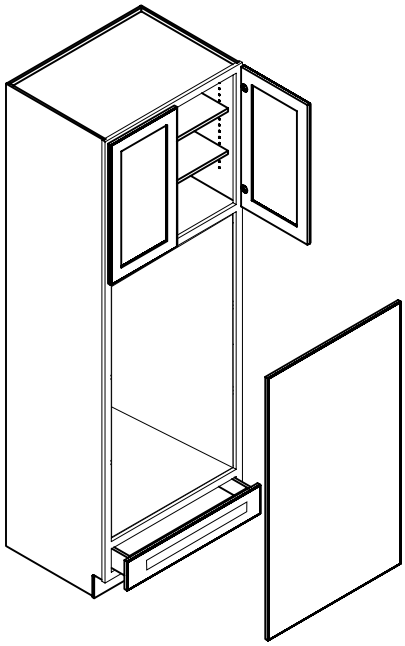

Side

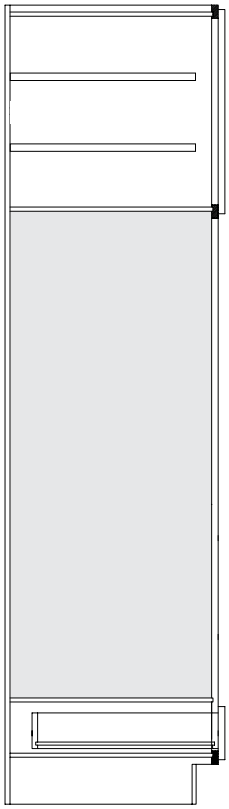

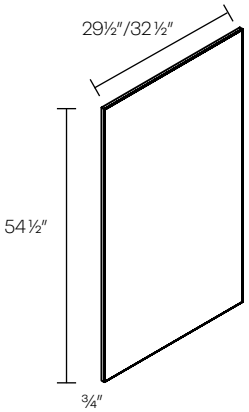

Pull Out Shelf

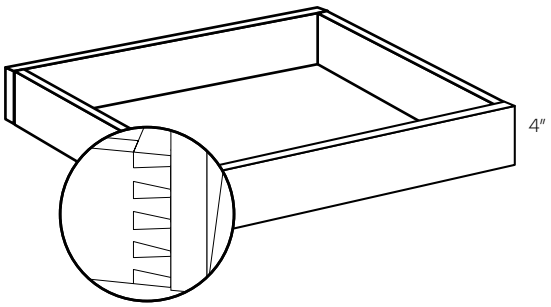

Item Number	L	T
POS12	223	223
POS15	233	233
POS18	257	257
POS21	270	270
POS24	305	305
POS27	318	318
POS30	331	331
POS33	346	346
POS36	371	371
POS42	389	389

- Natural finish
- Undermount soft-close glides
- POS uses dovetail construction
- Two spacers required
- BLUM glides not available on POS

Floating Shelves

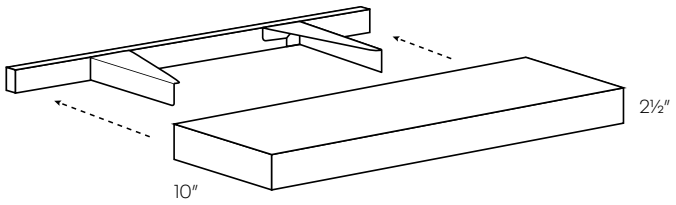

F-SHELF-24	544	544
F-SHELF-30	648	648
F-SHELF-36	752	752
F-SHELF-42	855	855

- Mounting hardware included

Wooden Cutlery Divider

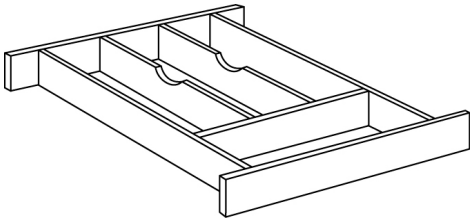

WCD-14	202	202
WCD-16	215	215
WCD-25	223	223
WCD-7	242	242

- To be trimmed on site

* Need to buy 2 pieces

WCD-14	B33*, B39*, BLB48/51
WCD-16	B15, B18, B21, B36*
WCD-25	B24, B27, DB30
WCD-7	B12, BLB39/42

Traditional Wood Hood

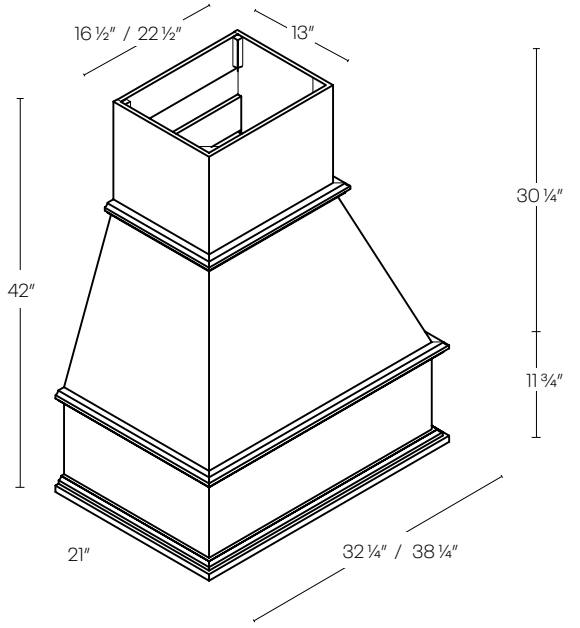

Item Number	L	T
WHT30	2813	3095
WHT36	3375	3713

•Metal Liners Included

30″ Hood Liner

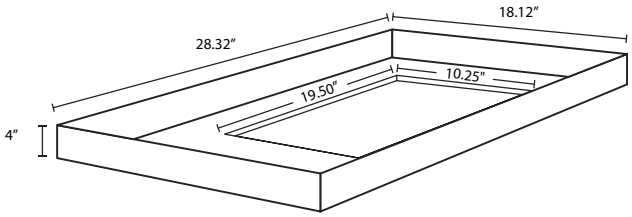

36″ Hood Liner

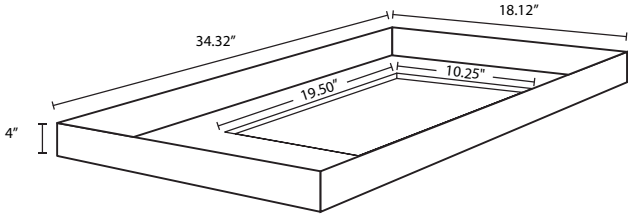

1 Door Vanity Sink Base Cabinet

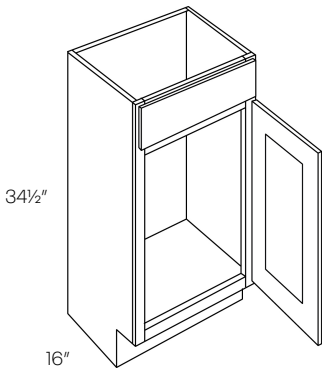

1 Door Vanity Base Cabinet

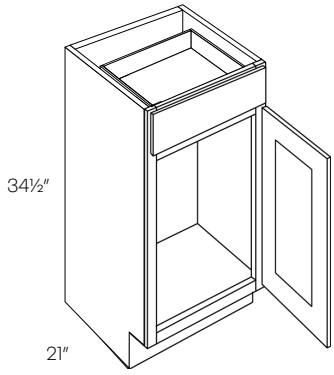

Vanity Drawer Base Cabinet

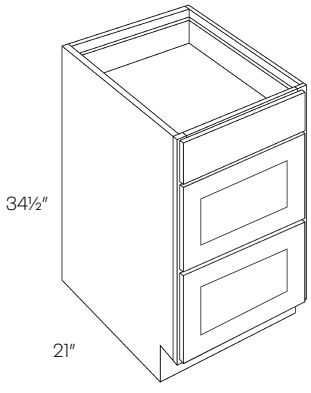

Item Number	L	T	Z
V1816	346	N/A	355
VB12	492	542	505
VB15	516	568	529
VB18	540	594	554

• Cabinet has a shelf

VDB12	787	866	807
VDB15	834	918	855
VDB18	854	940	876
VDB21	869	956	891
VDB24	896	986	919

2 Door Vanity Sink Base Cabinet

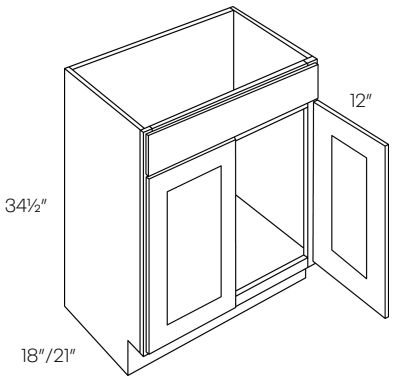

4 Door Vanity Sink Base Cabinet

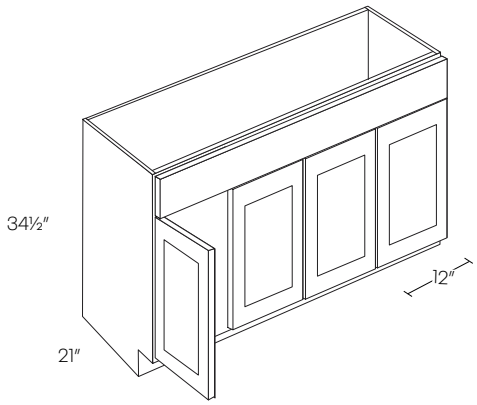

2 Drawer Vanity Sink Base Cabinet

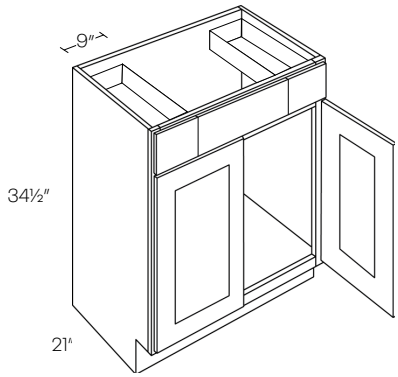

Item Number	L	T	Z
V2418	444	N/A	456
V3018	564	N/A	579
V24	481	530	494
V27	531	585	545
V30	599	659	614
V33	927	729	679
V36	724	797	743
V42	840	925	861
V48	1007	N/A	1033
VSB36	882	971	905
VSB42	945	1040	969

• Top side drawers are 9″

3 Door Vanity Base Cabinet

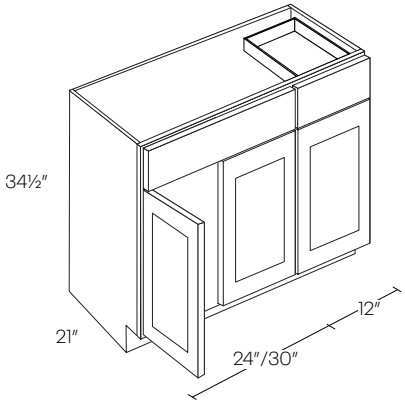

Item Number	L	T	Z
VB36	1066	N/A	1093
VB42	1078	N/A	1105

• Drawer on right side only

1 Door 2 Drawer Vanity Sink Base Cabinet

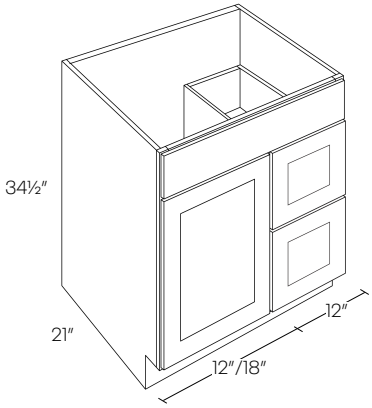

V24DL	720	N/A	738
V24DR	720	N/A	738
V30DL	995	1095	1058
V30DR	995	1095	1058

• DR shown in picture

2 Door 2 Drawer Vanity Sink Base Cabinet

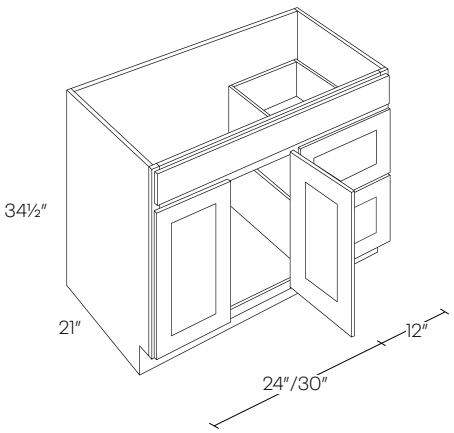

V36DL	1071	1179	1098
V36DR	1071	1179	1098
V42DL	1087	1196	1115
V42DR	1087	1196	1115

• DR shown in picture

Item Number	L	T	Z
V48DD	1242	1367	1274

2 Door 4 Drawer Vanity Sink Base Cabinet

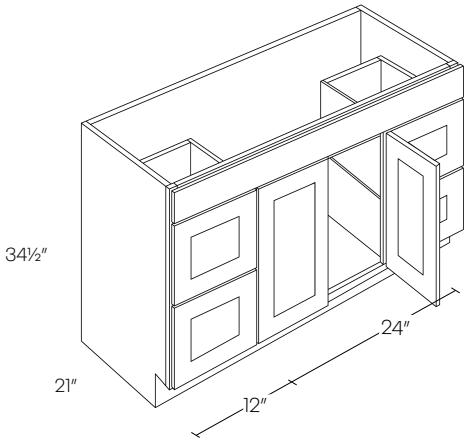

4 Door Vanity Base Cabinet

VB48	1229	N/A	1260
VB54	1294	N/A	1327
VB60	1354	N/A	1388

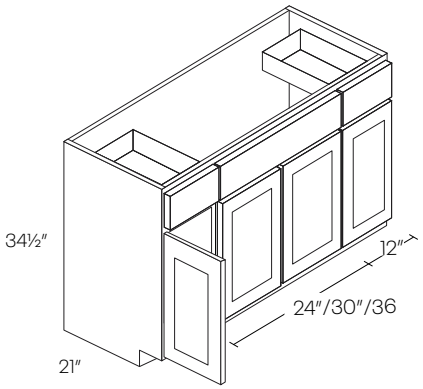

Vanity Drawer Base Cabinet

V60DD	1508	1659	1546

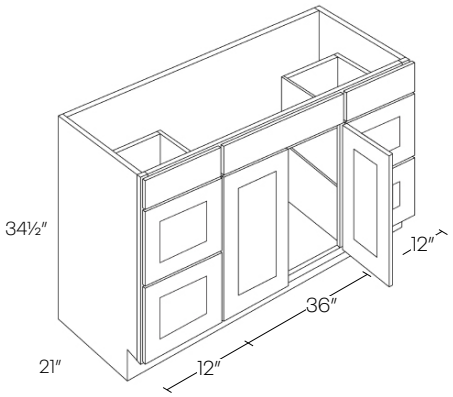

Vanity Drawer Base Cabinet

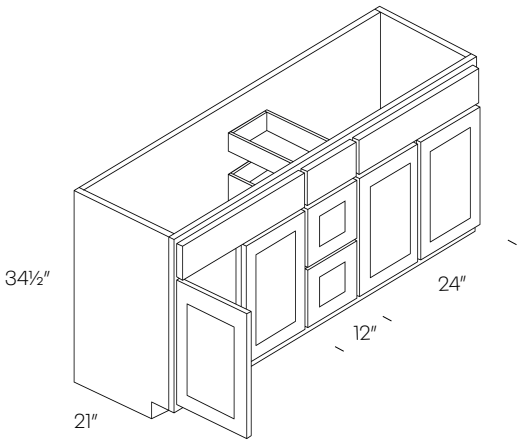

Item Number	L	T	Z
VSD60	1436	N/A	1472

Desk Drawer

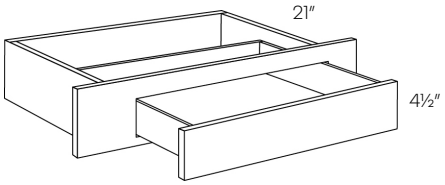

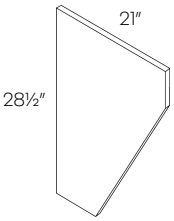

DD30	359	395	N/A
DS	229	229	N/A

- DS is 21″
- 2 ½″ trimmable sides
- Drawer front is 22 ½″ wide
- Slab drawer front

Single Door Medicine Cabinet

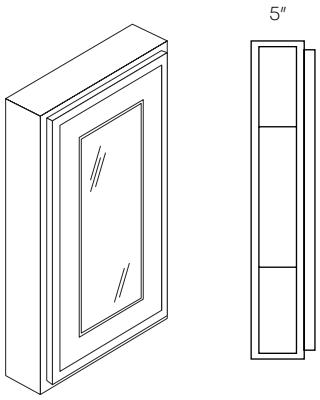

Item Number	L	T	Z
MC1830	294	N/A	N/A

- Mirrored front
- Finished side

Double Door Medicine Cabinet

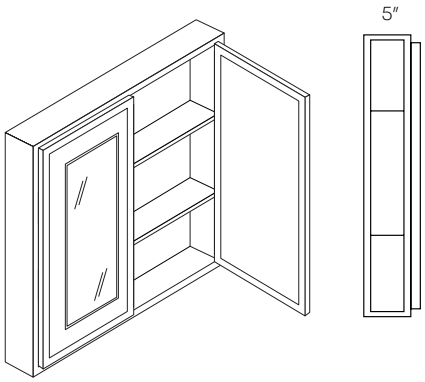

MC2430	527	N/A	N/A
MC3030	586	N/A	N/A
MC3630	661	N/A	N/A

- Mirrored front
- Finished side

Refrigerator End Panel

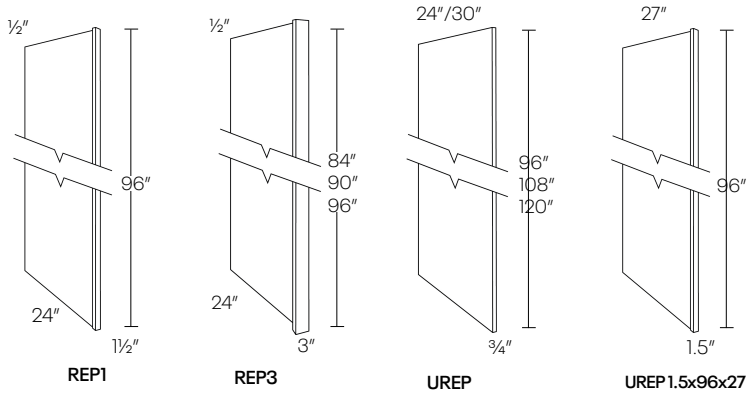

Item Number	L	T
REP196	583	583
REP384	529	529
REP390	556	556
REP396	583	583
UREP24	407	407
UREP30	540	540
UREP24-9	457	457
UREP30-9	608	608
UREP24-10	515	515
UREP30-10	684	684
UREP1.5x96x27	608	608

- UREP is finished on the front and back side
- UREP is not edgebanded on the short sides
- Front style not attached

Finished Skin

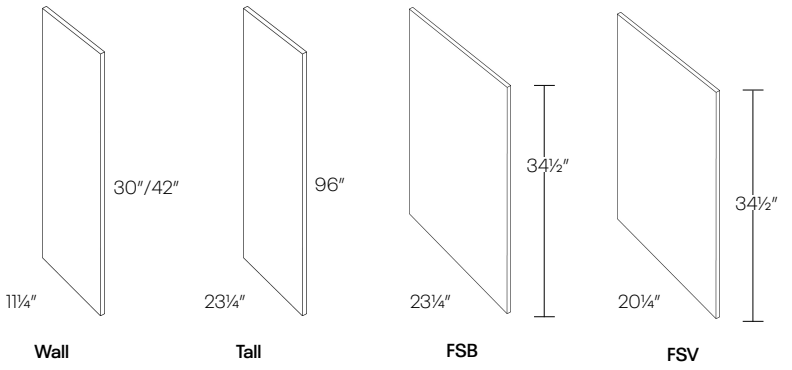

FS30	121	121
FS42	168	168
FS9624	319	319
FSB	157	157
FSV	157	157

- ¼″ Thick

Plywood Panel

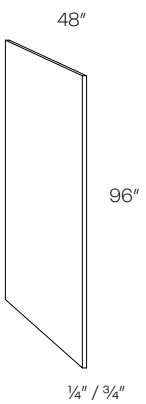

PLY4X8	462	462
PLY4X8X.75	1294	N/A

Base End Panel

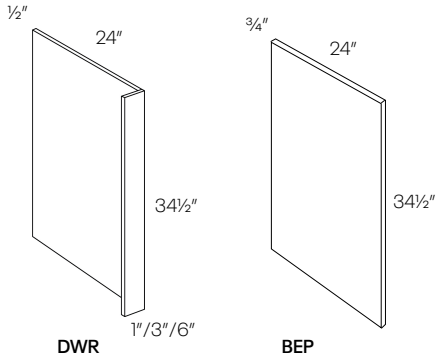

Item Number	L	T
DWR1	266	266
DWR3	306	306
DWR6	340	340
BEP	268	268

• Finished on both sides

Fillers

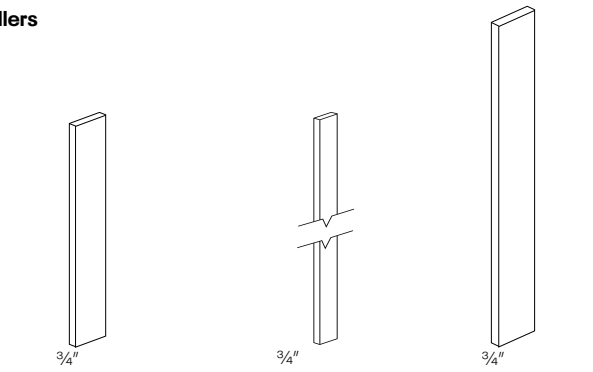

F330/F630/F342/F642 F396/F696 F3120/F6120

F3120	237	237
F6120	366	366
F330	59	59
F630	101	101
F342	77	77
F642	135	135
F396	180	180
F696	299	299

• Fillers finished on all 4 sides

Royal Crown Molding

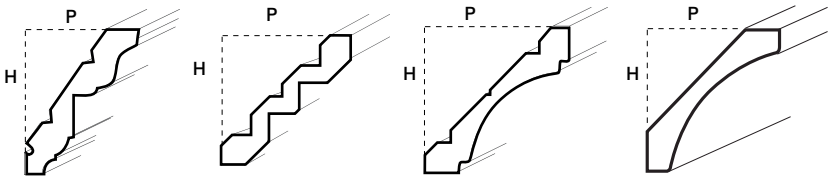

RCRM
Height: 3½″
Projection: 2½″

STEP
RCRMS
Height: 3⅛″
Projection: 3⅛″

COVE
RCRMC
Height: 3⅛″
Projection: 3⅛″

ROUND
RCRMR
Height: 3 ¼″
Projection: 3 ¼″

RCRM	447	447
RCRMS	447	447
RCRMC	447	447
RCRMR	447	447

• 8 feet long

Full Overlay Crown Moldings

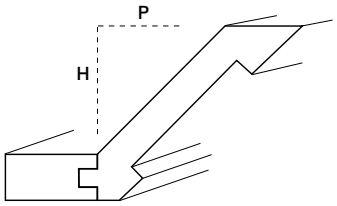

MFLOCR
Height: 3½″
Projection: 2½″

Item Number	L	T
MFLOCR	447	447

• 8 Feet long

Crown Molding

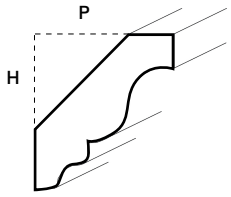

CRM
Height: 2″
Projection: 2″

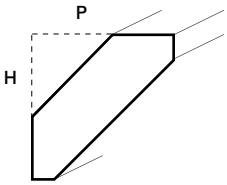

CRMS
Height: 2″
Projection: 2″

CRM	141	159
CRMS	159	159

• 8 feet long

Contemporary Crown Molding

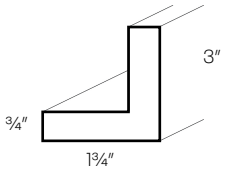

CCM	447	447

• 8 Feet long
• Outer ends are finished

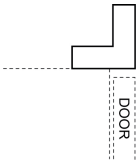

Suggested Use

Corner Molding

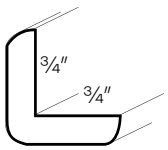

OCM

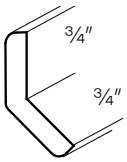

OCM135

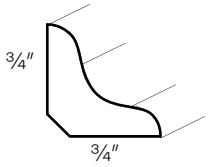

ICM

Item Number	L	T
OCM	121	121
OCM135	121	121
ICM	121	121

- 8 feet long

Light Rail Molding

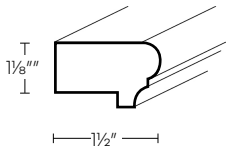

LTRM1

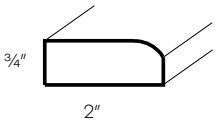

LTRM2

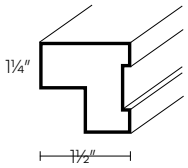

LTRM3

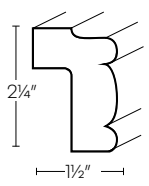

LTRM

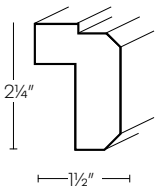

LTRMS

LTRM	310	310
LTRMS	310	310
LTRM1	233	233
LTRM2	233	233
LTRM3	310	310

- 8 Feet long

-

Shoe Molding

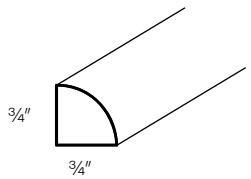

SHM	134	134

- 8 feet long

Scribe / Batten Molding

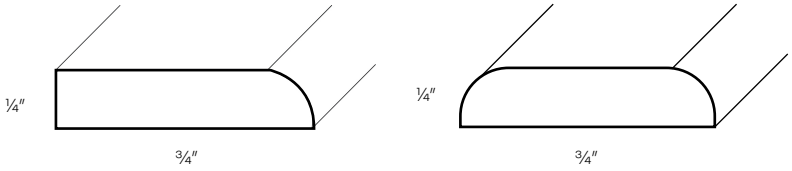

SCM BAT

Item Number	L	T
SCM	98	98
BAT	98	98

- 8 feet long

Large Post

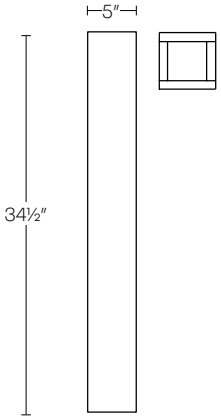

POST5-C	998	998

Corbel

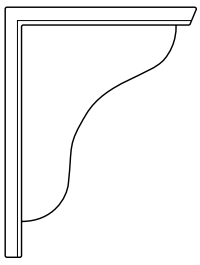

CBS6	113	113
CBS10	157	157

	W	D	H
CBS6	3″	3½″	6½″
CBS10	3″	7½″	10½″

Column

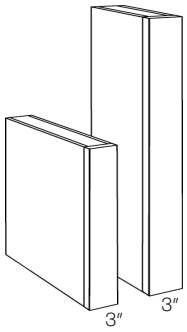

Item Number	L	T
CLM-B30 (34½″H X 30″D)	461	508
CLM-30X15 (30″H X 15″D)	257	257
CLM-36X15 (36″H X 15″D)	287	287
CLM-42X15 (42″H X 15″D)	319	319

- Depth is Trimmable
- Finished 3 sides

Base Molding

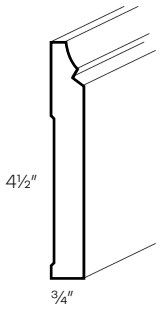

BSMS	319	319

- 8 feet long

Toe Kick

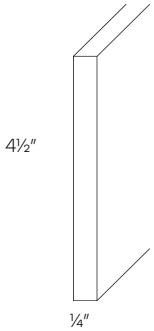

TKS	101	101

- 8 feet long

Toe Kick End Cap

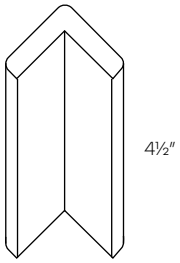

Item Number	L	T
TKS-CAP	57	57

• Top and bottom sides are finished

Touch Up Kit / Stain



TUP



TUP-PINT

TUP	113	113
TUP-PINT	133	133
CHW-LUX-CARE	15	15

• TUP-PINT is one pint available in all finishes

Modifications & Upgrades



Wall Cabinet

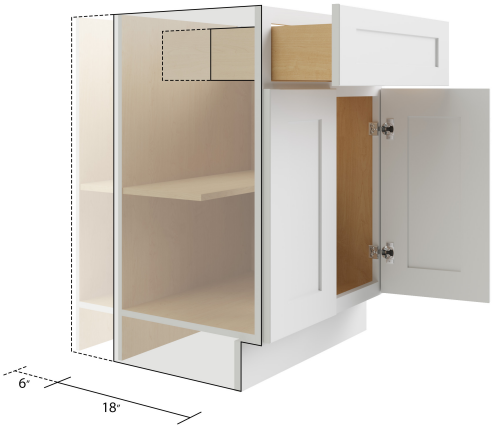

Base Cabinet

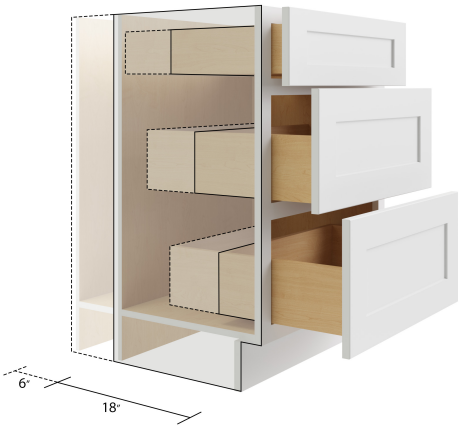

Drawer Base Cabinet
***Dovetail not in back**



Tall Cabinet

Cut Down Depth	Description	List Price
CT-CUT-DEEP-B*	Base cabinet, cut down depth	400
CT-CUT-DEEP-DB*	Drawer base cabinet, cut down depth	500
CT-CUT-DEEP-T*	Tall cabinet, cut down depth	500
CT-CUT-DEEP-W**	Wall cabinet, cut down depth	400

*Can be cut down to 9", 12", 15", 18" & 21" | **Can be cut down to 6", 9" & 11"
*All 9" Base Cabinets will have a dummy drawer front



Base Cabinet



Drawer Base Cabinet



Tall Cabinet



Wall Cabinet

* Must provide accurate drawing with your order

Chase Cuts	Description	List Price
CT-CHASE-B	Base cabinet, chase cut	700
CT-CHASE-DB	Drawer base cabinet, chase cut	900
CT-CHASE-T	Tall cabinet, chase cut	900
CT-CHASE-W	Wall cabinet, chase cut	600

•Non-stock cabinets, parts including doors and drawers, custom modifications, wood hoods and countertops (post form and self-edge) are not returnable.
•Must provide accurate drawings with your order

Item	Description	List Price

Door cut for glass



CT-DCG	Door cut for glass	205
CT-DCG-GLI	Door cut and insert glass	381
CT-DCG-GLI-F	Door cut and insert frosted glass	381

- Only Wall Cabinets can be cut for glass
- Loose glass not for sale

*Per door cost shown above

Extend Wall Cabinet Depth

CT-EXD-W	Extended wall cabinet depth	806

- Can only be extended to 15", 18", 21" & 24"

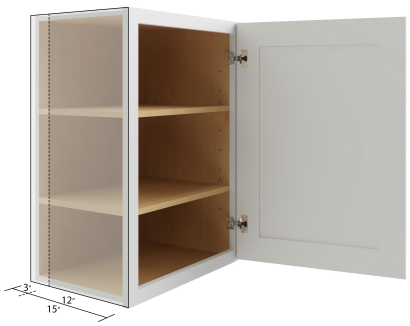

Remove Bottom from Cabinet

CT-FLOOR	Remove bottom of cabinet	200





Finished Interior



Item	Description	List Price
CT-FINISH-B	Finished Interior - Base Cabinet	450
CT-FINISH-W	Finished Interior - Wall Cabinet	450
CT-FINISH-T	Finished Interior - Tall Cabinet	800

• Drawers will not be finished

Toe Kick Modifications

CT-TK-CUT	Base cabinet, cut off toe kick	116
CT-TK-CUT-SHP	Base cabinet, cut off toe kick and ship	200
CT-TK-FLUSH	Flush Toe Kick	600
CT-TK-REDUCE	Recessed Toe Kick*	800



CT-TK-CUT-SHP



CT-TK-FLUSH



CT-TK-CUT

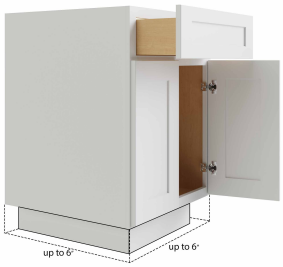

CT-TK-REDUCE

Reduced Depth of Top Drawer



Item	Description	List Price
CT-TD-REDUCE	Reduce Depth of Top Drawer	120

• Can be cut down to 9", 12", 15", 18" & 21"

Luxor Full Depth Shelf



CT-SHELF-FD-B9	Full Depth Shelf	18
CT-SHELF-FD-B12	Full Depth Shelf	23
CT-SHELF-FD-B15	Full Depth Shelf	28
CT-SHELF-FD-B18	Full Depth Shelf	35
CT-SHELF-FD-B21	Full Depth Shelf	38
CT-SHELF-FD-B24	Full Depth Shelf	43
CT-SHELF-FD-B27	Full Depth Shelf	50
CT-SHELF-FD-B30	Full Depth Shelf	58
CT-SHELF-FD-B33	Full Depth Shelf	68
CT-SHELF-FD-B36	Full Depth Shelf	75
CT-SHELF-FD-B39	Full Depth Shelf	85
CT-SHELF-FD-B42	Full Depth Shelf	93
CT-SHELF-FD-B48	Full Depth Shelf	100

Concord

BY CNC CABINETRY

Cabinet & Door Information

Concord

Full Overlay
1/4" Reveal

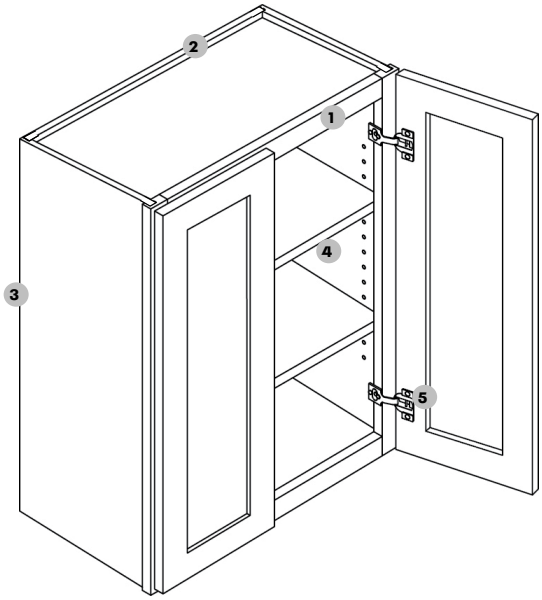

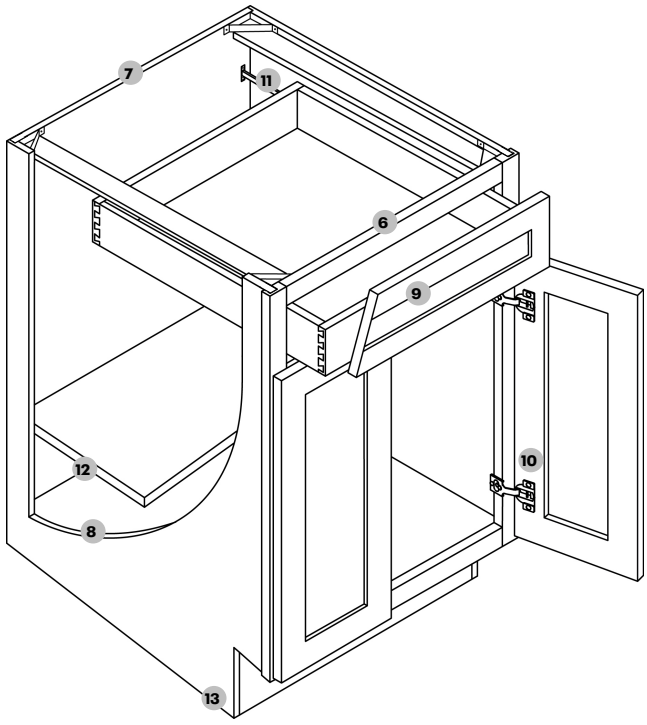

1. **Frame** — ¾" thick, 1½" wide, kiln-dried solid hardwood. Frame and sides are installed with a DADO interlocking system, which insures easy assembly and inseparable strength
2. **Back panel** — Full ½" plywood back with 3" hanging rails, installed with DADO groove. Screwed to top and bottom. Exterior is finished.
3. **End panel**
   Concord Collection
   ½" Plywood sides. Finished exterior with a natural wood-finish veneer interior.
   Concord Plus Program
   1/4" Applied finished ends - Customer must order. End panel will be flush.
4. **Shelves** — 3/4" thick, plywood; fully adjustable with metal clips.
5. **Hinges**
   Concord Collection
   Six-way, soft close adjustable clip-on hinges
   Concord Plus Program
   BLUM soft close adjustable clip-on hinges
   *36" and 42" Wall cabinets will have 3 hinges
6. **Base frame** — ¾" thick, 1½" wide, kiln-dried solid hardwood. Frame and sides are installed with a DADO groove, which insures easy assembly. Exterior is finished.
7. **Back panel** — Full ½" plywood back with 3" hanging rails, installed with DADO groove. Screwed to top and bottom.
8. **End panel**
   Concord Collection
   ½" Plywood sides. Finished exterior with a natural wood-finish veneer interior.
   Concord Plus Program
   1/4" Applied finished ends - Customer must order. End panel will be flush.
9. **Drawers** — ¾" Solid wood, dovetail construction. With high quality stainless steel full extension under-mount glide. With soft-close safety feature.
10. **Hinges**
    Concord Collection
    Six-way, soft close adjustable clip-on hinges
    Concord Plus Program
    BLUM soft close adjustable clip-on hinges
11. **Glides**
    Concord Collection
    High quality stainless steel full extension under-mount glide. With soft-close safety feature.
    Concord Plus Program
    BLUM soft close adjustable ull extensionunder-mount glides
12. **Shelves** — 3/4" thick, plywood; fully adjustable with metal clips. (10" deep)
13. **Toe kick** — 4 ½" Toe kick with 2 ½" inset on all standard base and vanity cabinets.

Elegant

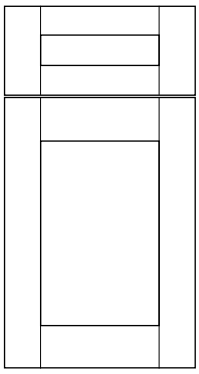

A full overlay 5 piece solid wood, with solid MDF veneer flat center panel. Mortise and Tenon construction.

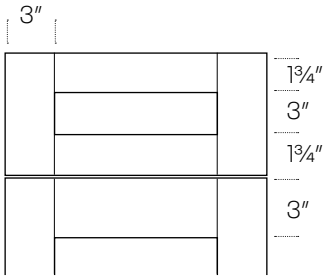

*Must call out finished sides for all PLUS orders

Finish	Price Code
EB02 - Smoky Grey (stain)	A
EB10 - White (paint)	A
EB23 - Stone (hybrid stain)	B
EB27 - Ocean (paint)	A

Elegant Plus - EBP	Price Code
101 - Sleek White	M
102 - Linen	M
103 - Sahara	M
104 - Mountain Stream	M
105 - Adirondack Blue	M
106 - Sage	M
107 - Evergreen	M
108 - Rumors	M
109- Cracked Pepper	M
110 - Jet Black	M

Newport

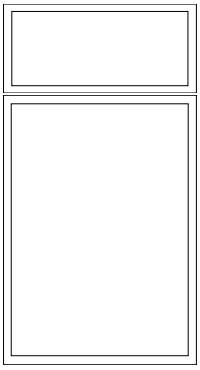

A full overlay 5 piece solid wood, with solid MDF veneer flat center panel. The Newport door features a 3/4″ frame.

*Must call out finished sides for all PLUS orders

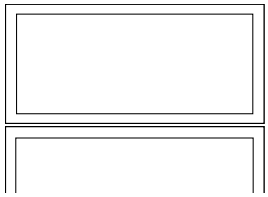

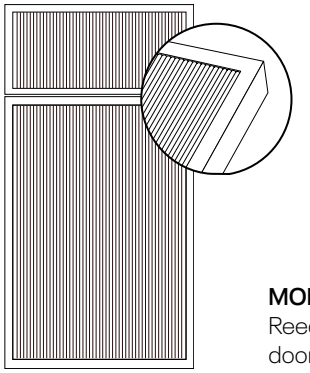

MODIFICATION
Reeded insert available as an upgrade for doors and/or drawers.

Finish	Price Code
NB10 - White	A

Newport Plus	Price Code
Stain - NKP	
200 - Ale	D
201 - Bourbon	D
202 - Wheat	D
Paint - NBP	
101 - Sleek White	M
102 - Linen	M
103 - Sahara	M
104 - Mountain Stream	M
105 - Adirondack Blue	M
106 - Sage	M
107 - Evergreen	M
108 - Rumors	M
109- Cracked Pepper	M
110 - Jet Black	M

Fashion

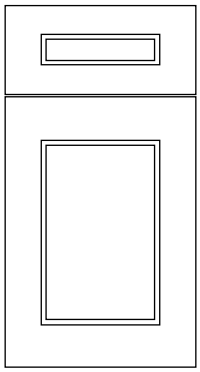

A full overlay 5 piece solid wood, with solid MDF veneer flat center panel. Mortise and Tenon construction.

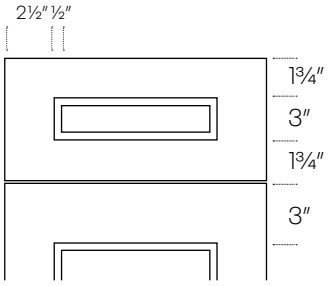

*Must call out finished sides for all PLUS orders

Finish	Price Code
FB10 - White (paint)	B
FB27 - Ocean (paint)	B

Fashion Plus - FBP	Price Code
101 - Sleek White	N
102 - Linen	N
103 - Sahara	N
104 - Mountain Stream	N
105 - Adirondack Blue	N
106 - Sage	N
107 - Evergreen	N
108 - Rumors	N
109- Cracked Pepper	N
110 - Jet Black	N

Sydney

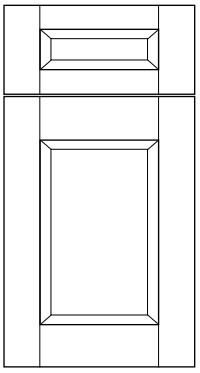

A full overlay 5 piece solid wood, MDF veneer center panel. French mitered construction.

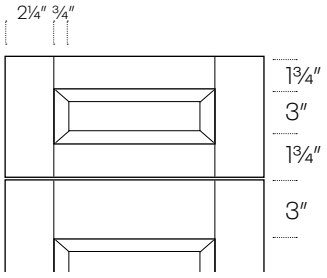

*Must call out finished sides for all PLUS orders

Finish	Price Code
SB10 - White	C

Sydney Plus	Price Code
Stain - SKP	
200 - Ale	P
201 - Bourbon	P
202 - Wheat	P
Paint - SBP	
101 - Sleek White	O
102 - Linen	O
103 - Sahara	O
104 - Mountain Stream	O
105 - Adirondack Blue	O
106 - Sage	O
107 - Evergreen	O
108 - Rumors	O
109- Cracked Pepper	O
110 - Jet Black	O

Richmond

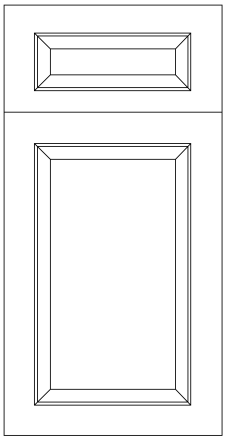

A full overlay 5 piece solid wood, raised panel MDF veneer center. Mitered construction.

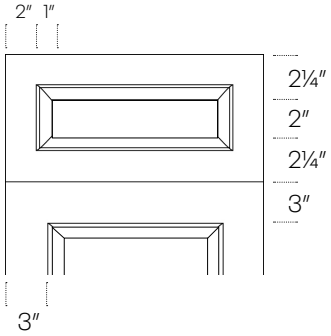

*Must call out finished sides for all PLUS orders

Finish	Price Code
RB10 - White (paint)	C
RB23 - Stone (hybrid stain)	C

Richmond Plus - RBP	Price Code
101 - Sleek White	O
102 - Linen	O
103 - Sahara	O
104 - Mountain Stream	O
105 - Adirondack Blue	O
106 - Sage	O
107 - Evergreen	O
108 - Rumors	O
109- Cracked Pepper	O
110 - Jet Black	O

Park Avenue

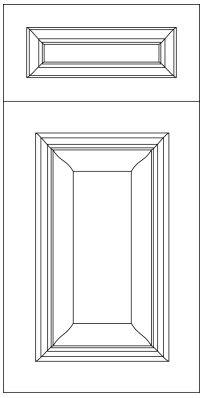

A full overlay 5 piece solid wood, raised panel MDF veneer center. Mitered construction.

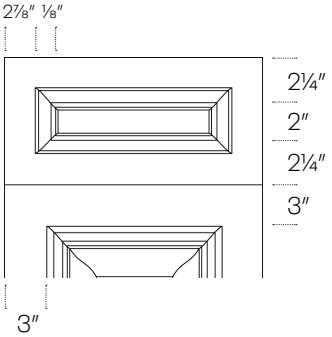

Finish	Price Code
PB10 - White (paint)	C
PB27- Ocean (paint)	C

Specifications & Pricing

12" High Wall Cabinet

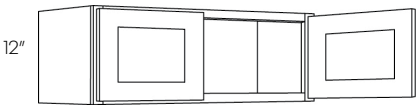

Item Number	Plus Program A	B	C	D	M	N	O	P
3012	478	507	536	603	574	609	643	675
3312	506	537	567	638	608	644	681	715
3612	550	583	617	693	660	700	740	777
3912	632	670	708	797	759	804	850	892

• No Shelf

12" High, 24" Deep Wall Cabinet

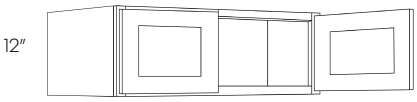

3012X24	673	714	754	848	808	857	905	950
3312X24	686	728	769	865	824	873	922	969
3612X24	740	785	829	933	888	942	995	1045
3912X24	793	841	889	1000	952	1009	1066	1120

• No Shelf

15" High Wall Cabinet

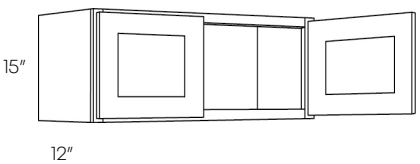

1215 (one door)	307	326	344	387	369	391	413	434
1515 (one door)	328	348	368	414	394	418	441	463
1815 (one door)	354	376	397	447	425	451	476	500
2115 (one door)	378	401	424	477	454	481	509	534
2415	481	510	539	607	578	612	647	679
2715	721	765	808	909	866	918	970	1018
3015	496	526	556	625	596	631	667	700
3315	523	555	586	659	628	666	703	739
3615	603	640	676	760	724	768	811	851
3915	666	706	746	840	800	848	896	940

• No Shelf

15" High, 24" Deep Wall Cabinet

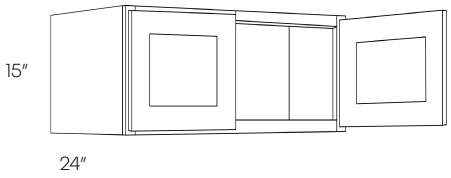

Item Number	A	B	C	Plus Program D	M	N	O	P
3015X24	713	756	799	899	856	907	959	1007
3315X24	750	795	841	945	900	954	1009	1059
3615X24	803	852	900	1012	964	1022	1080	1134
3915X24	857	909	960	1080	1029	1091	1152	1210

• No Shelf

18" High Wall Cabinet

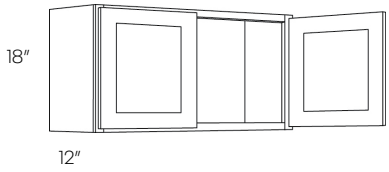

1218 (one door)	351	373	394	443	422	447	472	496
1518 (one door)	377	400	423	476	453	480	507	533
1818 (one door)	405	430	454	511	486	516	545	572
2118 (one door)	455	483	510	574	574	579	612	643
2418	503	534	564	634	604	640	677	710
2718	562	596	630	709	675	715	756	794
3018	529	561	593	667	635	673	711	747
3318	546	579	612	688	656	695	734	771
3618	624	662	699	787	749	794	839	881
3918	698	740	782	880	838	888	939	986

• No Shelf

18" High, 24" Deep Wall Cabinet

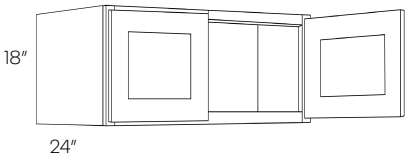

3018X24	754	800	845	951	905	960	1014	1065
3318X24	813	862	911	1025	976	1035	1093	1148
3618X24	864	916	968	1089	1037	1100	1162	1220
3918X24	914	969	1024	1152	1097	1163	1229	1290

• No Shelf

24" High Wall Cabinet

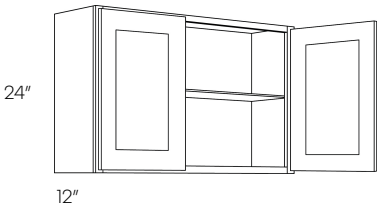

Item Number	A	B	C	Plus Program D	M	N	O	P
2424	677	718	759	854	813	862	910	956
2724	682	723	764	860	819	868	917	963
3024	692	734	776	872	831	881	931	977
3324	734	779	823	925	881	934	987	1036
3624	788	836	883	993	946	1003	1060	1113
3924	819	869	918	1032	983	1042	1101	1156
4224	887	941	994	1118	1065	1129	1193	1252

• Has One Shelf

24" High, 24" Deep Wall Cabinet

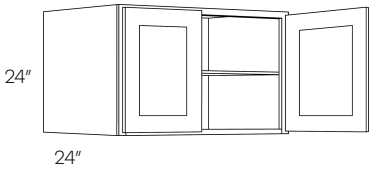

3024X24	927	983	1039	1169	1113	1180	1246	1309
3324X24	994	1054	1114	1253	1193	1265	1336	1403
3624X24	1065	1129	1193	1342	1278	1355	1432	1503
3924X24	1137	N/A	N/A	1433	1365	1447	1529	1605

• Has One Shelf

15" - 18"" High Diagonal Corner Wall Cabinet

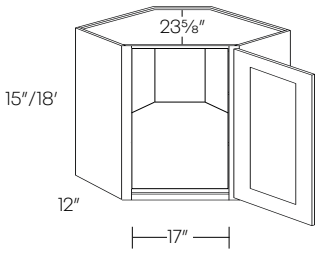

CW2415	707	750	792	891	849	900	951	998
CW2418	809	858	907	1020	971	1030	1088	1142

• 2430 uses 14¹¹⁄₁₆" door
• Requires 24" X 24" wall space
• Not available in Park Ave

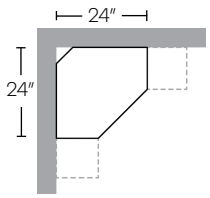

1125

Square Corner Wall Cabinet

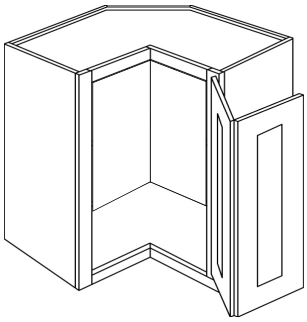

Item Number	A	B	C	Plus Program D	M	N	O	P
WSQ2415	837	888	938	1055	1005	1065	1125	1182
WSQ2418	955	1013	1070	1204	1146	1215	1284	1348

• Not available in Park Ave

Horizontal Wall Cabinet

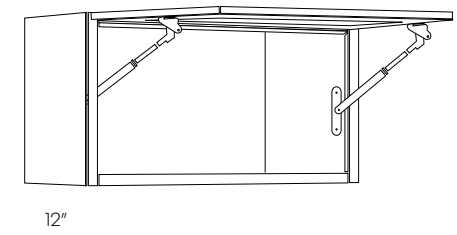

3012-HD	678	719	760	855	814	863	912	957
3015-HD	696	738	780	877	836	886	936	983
3018-HD	729	773	817	919	875	928	980	1029
3024-HD*	892	946	1000	1124	1071	1135	1199	1259
3612-HD	750	795	841	945	900	954	1009	1059
3615-HD	803	852	900	1012	964	1022	1080	1134
3618-HD	824	874	923	1039	989	1049	1108	1163
3624-HD*	988	1048	1107	1245	1186	1257	1328	1395

*Has One Shelf

30″ High Single Door Wall Cabinet

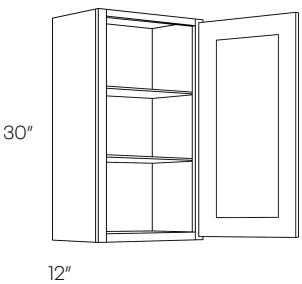

930	392	416	440	494	471	499	527	554
1230	438	465	491	552	526	558	589	619
1530	471	500	528	594	566	600	634	665
1830	530	562	594	668	636	675	713	748
2130	633	671	709	798	760	806	851	894

30" High Open Wall Cabinet

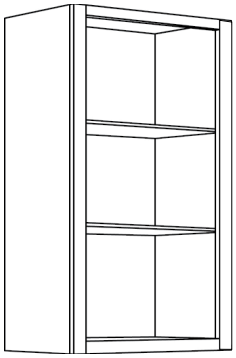

- Finished interior

Item Number	A	B	C	Plus Program D	M	N	O	P
WOC1830	626	664	702	789	752	797	842	884

30" High Double Door Wall Cabinet

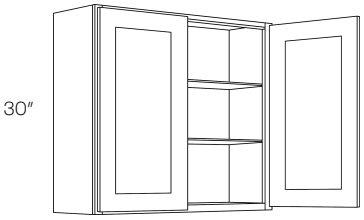

2430	674	715	755	850	809	858	906	952
2730	744	789	834	938	893	947	1000	1050
3030	762	808	854	961	915	970	1025	1076
3330	831	881	931	1048	998	1058	1117	1173
3630	882	935	988	1112	1059	1122	1186	1245
3930	954	1012	1069	1203	1145	1214	1283	1347
4230	1029	1091	1153	1297	1235	1309	1383	1453

30" High Open Wall Cabinet

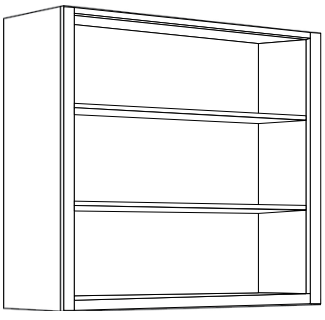

- Finished interior
- Matching Edgeband

WOC3030	900	954	1009	1134	1080	1145	1210	1271

30″ High Blind Wall Cabinet

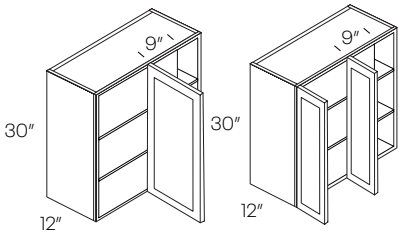

BLW27/BLW30/BLW36 BLW42

Item Number	A	B	C	Plus Program D	M	N	O	P
BLW27/3030 (1 door)	961	1019	1077	1211	1154	1223	1292	1357
BLW30 /3330 (1 door)	1056	1120	1183	1331	1268	1344	1420	1491
BLW36/3930 (1 door)	1152	1222	1291	1452	1383	1466	1549	1626
BLW42/4530	1380	1463	1546	1739	1656	1756	1855	1948

• Reversible left or right

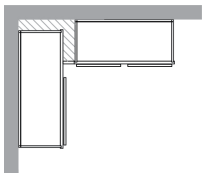

Cabinet	Min. Pull	Max. Pull	Actual Size	Door(s)	Door Opening
BLW27/3030	27″	30″	27″	1230	9″ X 27″
BLW30/3330	30″	33″	30″	1530	12″ X 27″
BLW36/3930	36″	39″	36″	2130	18″ X 27″
BLW42/4530	42″	45″	42″	2730	24″ X 27″

30″ High Diagonal Corner Wall Cabinet

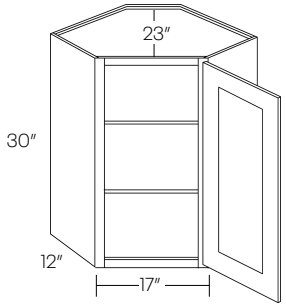

CW2430	983	1042	1101	1239	1180	1251	1322	1388

• 2430 uses 14¹¹⁄₁₆″ door
• Requires 24″ X 24″ wall space

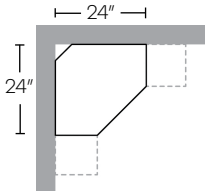

30″ High Corner Wall Cabinet

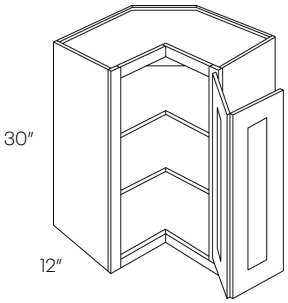

WSQ2430	1056	1120	1183	1331	1268	1344	1420	1491

• Requires 24″ X 24″ wall space
• Pie is 12″ X 12″

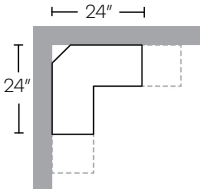

36″ High Single Door Wall Cabinet

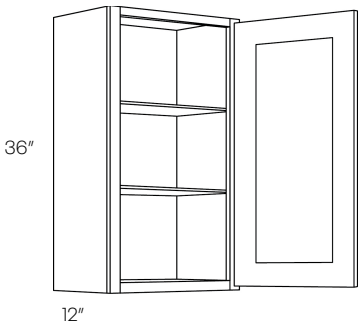

36″ High Open Wall Cabinet

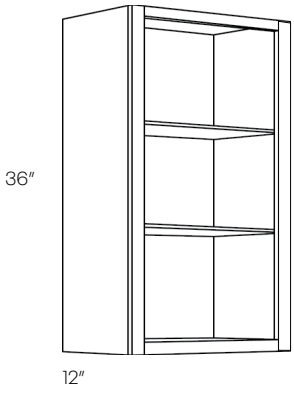

36″ High Double Door Wall Cabinet

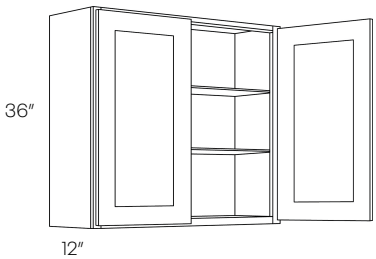

Item Number	A	B	C	Plus Program D	M	N	O	P
936	471	500	528	594	566	600	634	665
1236	520	552	583	656	624	662	699	734
1536	566	600	634	714	680	720	761	799
1836	629	667	705	793	755	801	846	888
2136	756	802	847	953	908	962	1017	1067
WOC1836	744	789	834	938	893	947	1000	1050
2436	806	855	903	1016	968	1026	1084	1138
2736	890	944	997	1122	1068	1133	1197	1256
3036	929	985	1041	1171	1115	1182	1249	1312
3336	994	1054	1114	1253	1193	1265	1336	1403
3636	1051	1115	1178	1325	1262	1337	1413	1484
4236	1234	1309	1383	1555	1481	1570	1659	1742

• Finished interior

36″ High Open Wall Cabinet

Item Number	A	B	C	Plus Program D	M	N	O	P
WOC3036	1098	1164	1230	1384	1318	1397	1476	1550

• Finished interior

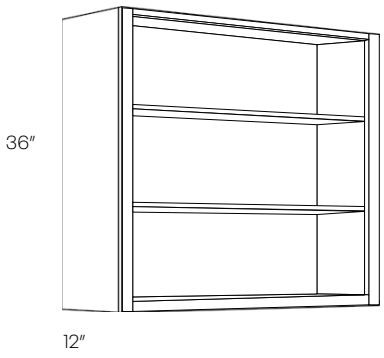

36″ High Blind Wall Cabinet

BLW27/3036	1118	1186	1253	1409	1342	1423	1503	1578
BLW30/3336	1223	1297	1370	1541	1468	1556	1644	1726
BLW36/3936	1327	1407	1487	1673	1593	1688	1784	1873
BLW42/4536	1544	1637	1730	1946	1853	1964	2076	2179

• Reversible left or right

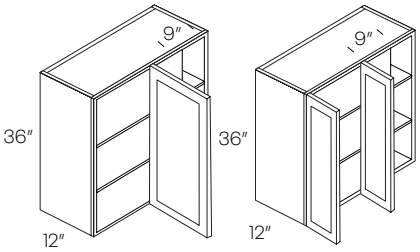

BLW27/BLW36 **BLW39**

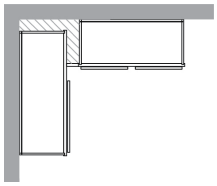

Cabinet	Min. Pull	Max. Pull	Actual Size	Door(s)	Door Opening
BLW27/3036	27″	30″	27″	1236	9″ X 33″
BLW30/3336	30″	33″	30″	1536	12″ X 33″
BLW36/3936	36″	39″	36″	2136	18″ X 33″
BLW42/4536	42″	45″	42″	2736	24″ X 33″

36″ High Diagonal Corner Wall Cabinet

CW2436	1035	1098	1160	1305	1242	1317	1392	1461

• 2430 uses 14¹¹⁄₁₆″ door
• Requires 24″ X 24″ wall space

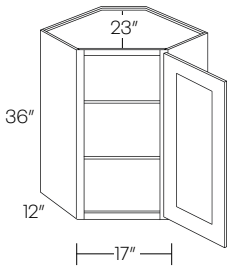

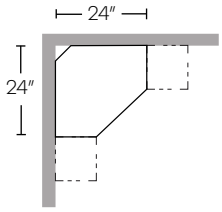

36″ High Corner Wall Cabinet

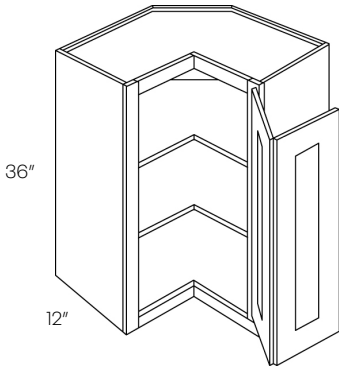

- Requires 24″ X 24″ wall space
- Pie is 12″ X 12″

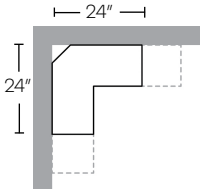

42″ High Single Door Wall Cabinet

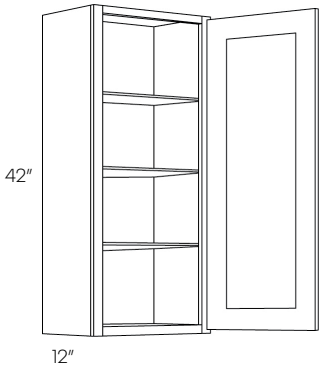

42″ High Open Wall Cabinet

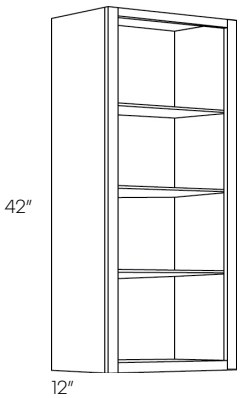

- Finished interior

Item Number	A	B	C	Plus Program D	M	N	O	P
WSQ2436	1111	1178	1245	1400	1334	1414	1494	1568
942	525	557	588	662	630	668	706	741
1242	575	610	645	725	690	732	773	812
1542	630	668	706	794	756	802	847	890
1842	700	742	785	882	840	891	941	988
2142	839	890	940	1058	1007	1068	1128	1184
WOC1842	827	877	927	1043	993	1052	1112	1168

42″ High Double Door Wall Cabinet

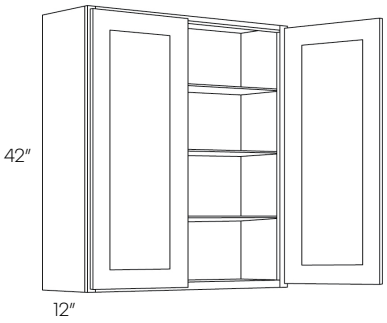

Item Number	A	B	C	Plus Program D	M	N	O	P
2442	900	954	1009	1134	1080	1145	1210	1271
2742	988	1048	1107	1245	1186	1257	1328	1395
3042	1023	1085	1146	1289	1228	1302	1375	1444
3342	1101	1168	1234	1388	1322	1401	1480	1554
3642	1167	1238	1308	1471	1401	1485	1569	1647
4242	1356	1438	1519	1709	1628	1725	1823	1914

42″ High Open Wall Cabinet

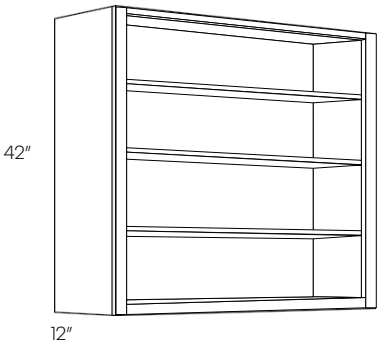

WOC3042	1208	1281	1353	1523	1450	1537	1624	1705

• Finished interior

42″ High Blind Wall Cabinet

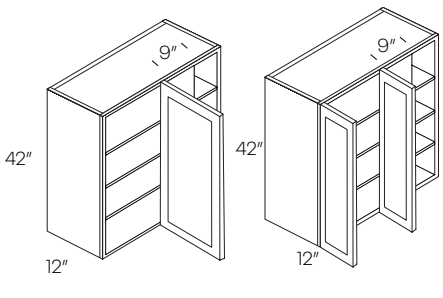

BLW27/BLW36 **BLW42**

BLW27/3042	1270	1333	1400	1600	1524	1600	1680	1764
BLW30/3342	1398	1468	1542	1762	1678	1762	1850	1942
BLW36/3942	1527	1603	1683	1923	1832	1923	2020	2121
BLW42/4542	1655	1738	1825	2085	1986	2085	2189	2299

• Reversible left or right

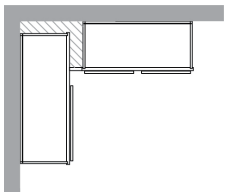

Cabinet	Min. Pull	Max. Pull	Actual Size	Door(s)	Door Opening
BLW27/3042	27″	30″	27″	1242	9″ X 39″
BLW30/3342	30″	33″	30″	1542	12″ X 39″
BLW36/3942	36″	39″	36″	2142	18″ X 39″
BLW42/4542	42″	45″	42″	2742	24″ X 39″

Item Number	Plus Program A	B	C	D	M	N	O	P
CW2442	1283	1360	1437	1617	1540	1632	1725	1811

42″ High 4 Door Wall Cabinet

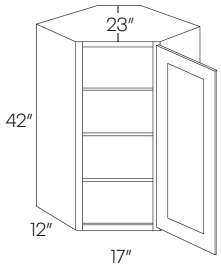

• Requires 24″ X 24″ wall space

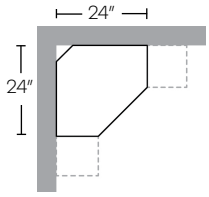

WSQ2442	1376	1459	1542	1734	1652	1751	1850	1942

42″ High Corner Wall Cabinet

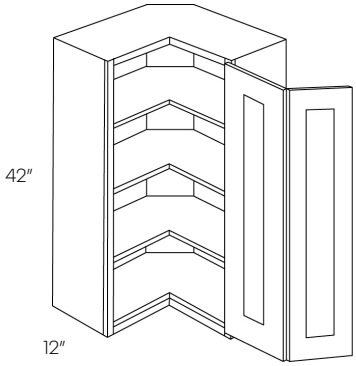

• Requires 24″ X 24″
• Pie is 12″ X 12″

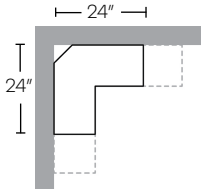

CT1848	1381	1464	1547	1741	1658	1757	1857	1949
CT1854	1535	1628	1720	1935	1842	1953	2064	2167
CT1860	1677	1778	1879	2114	2013	2134	2254	2367

Wall Countertop Cabinet

•Must sit on top of counter
• Not available in Park Ave

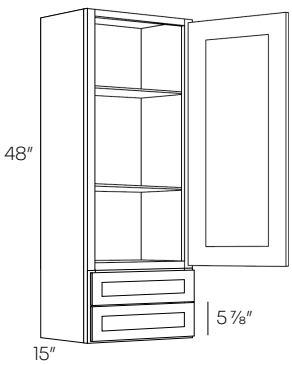

CT1848

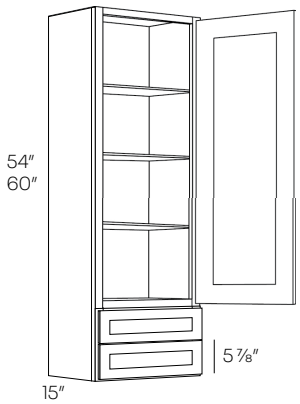

CT1854/CT1860

Bookcase Cabinet

Item Number	A	B	C	Plus Program D	M	N	O	P
BCC1854	1279	1356	1433	1612	1535	1627	1719	1805
BCC1860	1399	1483	1567	1763	1679	1780	1881	1975
BCC3054	1771	1878	1984	2232	2126	2253	2381	2500
BCC3060	1892	2006	2120	2384	2271	2407	2543	2670

- Finished interior
- Must sit on top of counter
- Adjustable shelves
- No floor

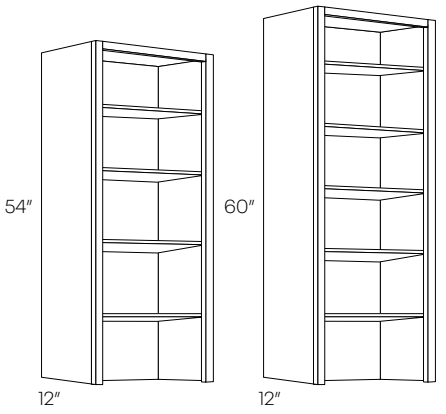

BCC1854 BCC1860

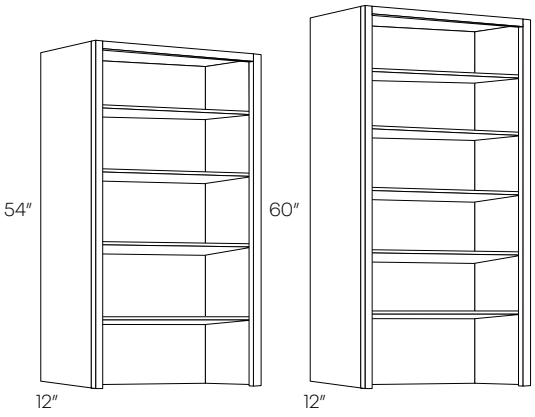

BCC3054 BCC3060

Wine Rack Cabinet

WCX1818	402	427	451	507	483	512	541	568

- Finished interior

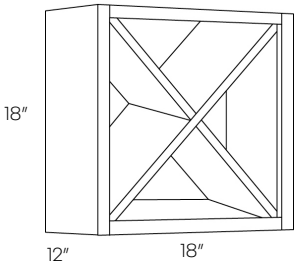

WCX1818

Organizer Cubby

WC

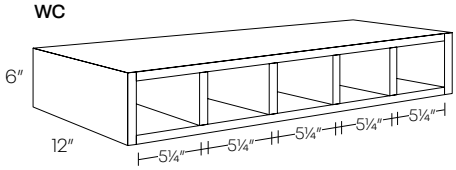

OC

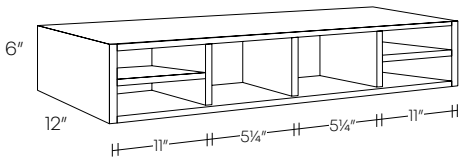

Item Number	A	B	C	Plus Program D	M	N	O	P
OC36	332	352	372	419	399	423	447	469
WC30	304	323	341	384	365	387	409	430
WC36	315	334	353	397	378	401	424	445

- Finished interior
- Wood is ¾″ thick

Knick Knack Wall Shelf

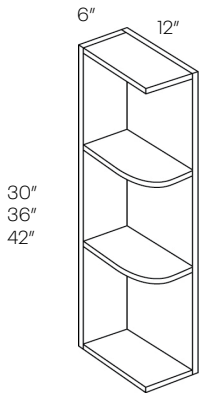

WS30	232	246	260	293	279	296	312	328
WS36	274	291	307	346	329	349	369	387
WS42	310	329	348	391	372	395	417	438

- Reversible
- Fixed shelves
- 42″ Has 3 shelves

Single Door Wall End Cabinet

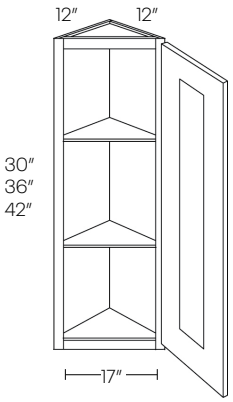

WEC1230	452	480	507	570	543	575	608	638
WEC1236	506	537	567	638	608	644	681	715
WEC1242	565	599	633	712	678	719	760	798

- 42″ Has 3 shelves

Double Door Wall End Cabinet

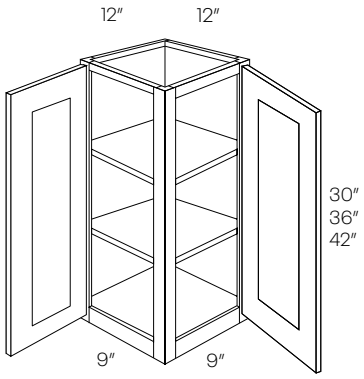

Item Number	A	B	C	Plus Program D	M	N	O	P
WECD1230	565	599	633	712	678	719	760	798
WECD1236	633	671	709	798	760	806	851	894
WECD1242	706	749	791	890	848	899	949	997

• 42″ Has 3 shelves

Wall Spice Cabinet

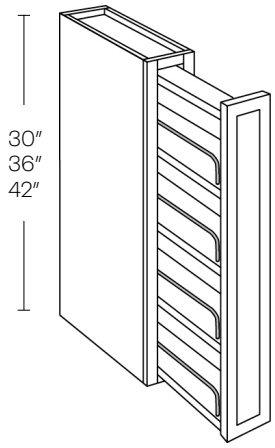

WSP30	502	533	563	633	603	639	675	709
WSP36	584	620	655	736	701	743	785	825
WSP42	617	655	692	778	741	785	830	871

• Cabinet is 6″ wide
•Not full extension

Microwave Cabinet

MW3018	566	600	634	714	680	720	761	799

• Finished interior
• Opening 27″ W X 14¼″ H
• Shelf ships loose
• Depth of the shelf may be cut-down

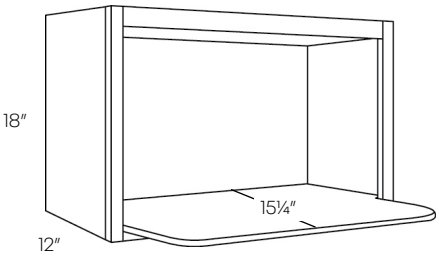

Single Door & Drawer Base Cabinet

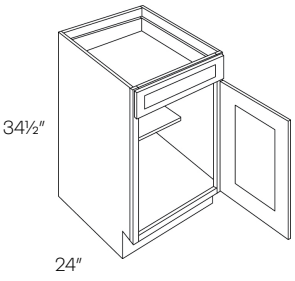

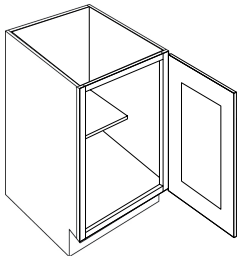

Full Height

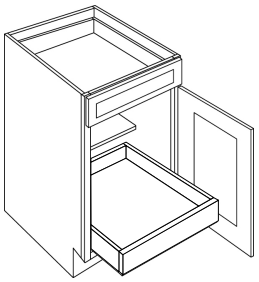

1 POS

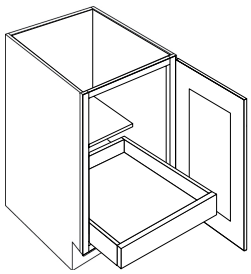

Full Hieght 1 POS

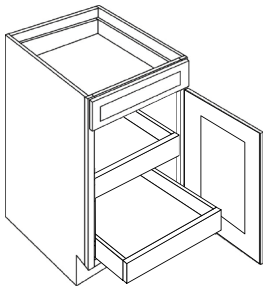

2 POS

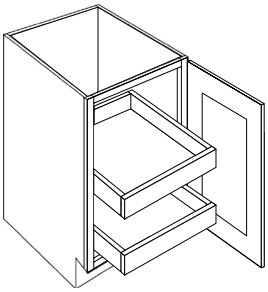

Full Height 2 POS

Item Number	A	B	C	Plus Program D	M	N	O	P
B9	628	666	704	792	754	799	845	887
B12	709	752	795	894	851	902	953	1001
B15	739	784	828	932	887	941	994	1043
B18	779	826	873	982	935	991	1047	1100
B21	874	927	979	1102	1049	1112	1175	1234
B9-FH	628	666	704	792	754	799	845	887
B12-FH	709	752	795	894	851	902	953	1001
B15-FH	739	784	828	932	887	941	994	1043
B18-FH	779	826	873	982	935	991	1047	1100
B21-FH	874	927	979	1102	1049	1112	1175	1234
B12-POS1	1030	1073	1116	1215	1172	1223	1274	1322
B15-POS1	1070	1115	1159	1263	1218	1272	1325	1374
B18-POS1	1134	1181	1228	1337	1290	1346	1402	1455
B21-POS1	1242	1295	1347	1470	1417	1480	1543	1602
B12-FH-POS1	1030	1073	1116	1215	1172	1223	1274	1322
B15-FH-POS1	1070	1115	1159	1263	1218	1272	1325	1374
B18-FH-POS1	1134	1181	1228	1337	1290	1346	1402	1455
B21-FH-POS1	1242	1295	1347	1470	1417	1480	1543	1602
B12-POS2	1351	1394	1437	1536	1493	1544	1595	1643
B15-POS2	1401	1446	1490	1594	1549	1603	1656	1705
B18-POS2	1489	1536	1583	1692	1645	1701	1757	1810
B21-POS2	1610	1663	1715	1838	1785	1848	1911	1970
B12-FH-POS2	1351	1394	1437	1536	1493	1544	1595	1643
B15-FH-POS2	1401	1446	1490	1594	1549	1603	1656	1705
B18-FH-POS2	1489	1536	1583	1692	1645	1701	1757	1810
B21-FH-POS2	1610	1663	1715	1838	1785	1848	1911	1970

- Undermount soft close glides for POS
- POS has natural finish

Single Door & Drawer Base Cabinet W/ POD

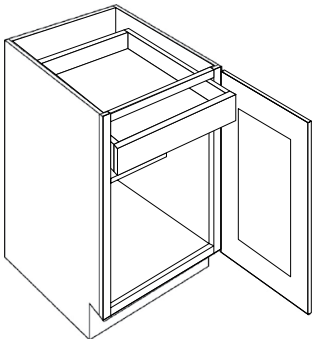

Full Height POD

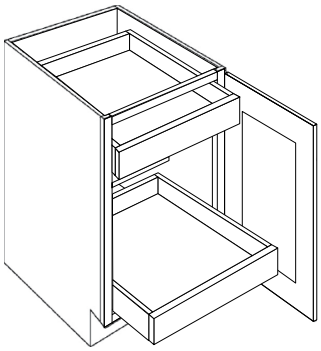

Full Height POD, 1 POS

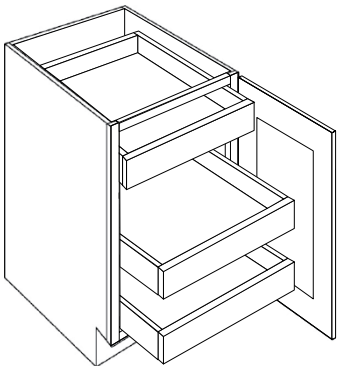

Full Height POD, 2 POS

				Plus Program				
Item Number	A	B	C	D	M	N	O	P
B12-FH-POD	1030	1073	1116	1215	1172	1223	1274	1322
B12-FH-POS1-POD	1351	1394	1437	1536	1493	1544	1595	1643
B12-FH-POS2-POD	1351	1394	1437	1857	1814	1865	1916	1964
B15-FH-POD	1070	1115	1159	1263	1218	1272	1325	1374
B15-FH-POS1-POD	1401	1446	1490	1594	1549	1603	1656	1705
B15-FH-POS2-POD	1401	1446	1490	1925	1880	1934	1987	2036
B18-FH-POD	1134	1181	1228	1337	1290	1346	1402	1455
B18-FH-POS1-POD	1489	1536	1583	1692	1645	1701	1757	1810
B18-FH-POS2-POD	1489	1536	1583	2047	2000	2056	2112	2165
B21-FH-POD	1242	1295	1347	1470	1417	1480	1543	1602
B21-FH-POS1-POD	1610	1663	1715	1838	1785	1848	1911	1970
B21-FH-POS2-POD	1610	1663	1715	2206	2153	2216	2279	2338

Single Drawer Double Door Base Cabinet

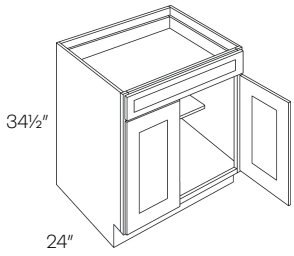

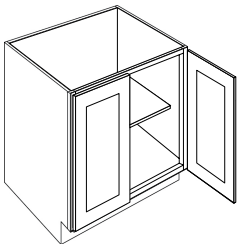

Full Height

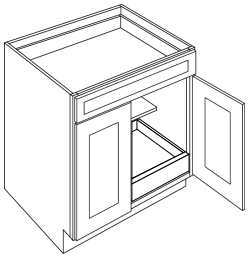

1 POS

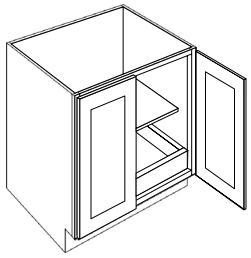

Full Height 1 POS

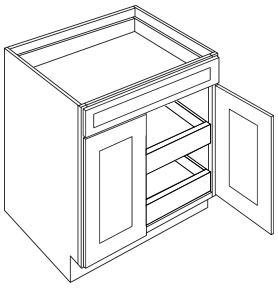

2 POS

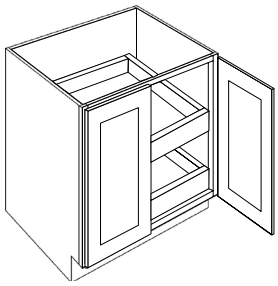

Full Height 2 POS

Item Number	A	B	C	Plus Program D	M	N	O	P
B24	940	997	1053	1185	1128	1196	1264	1327
B27	1029	1091	1153	1297	1235	1309	1383	1453
B24-FH	940	997	1053	1185	1128	1196	1264	1327
B27-FH	1029	1091	1153	1297	1235	1309	1383	1453
B24-POS1	1343	1400	1456	1588	1531	1599	1667	1730
B27-POS1	1444	1506	1568	1712	1650	1724	1798	1868
B24-FH-POS1	1343	1400	1456	1588	1531	1599	1667	1730
B27-FH-POS1	1444	1506	1568	1712	1650	1724	1798	1868
B24-POS2	1859	1921	1983	2127	2065	2139	2213	2283
B27-POS2	2023	2094	2164	2327	2257	2341	2425	2503
B24-FH-POS2	1859	1921	1983	2127	2065	2139	2213	2283
B27-FH-POS2	2023	2094	2164	2327	2257	2341	2425	2503

- Undermount soft close glides for POS
- POS has natural finish

Single Drawer Double Door Base Cabinet W/ POD

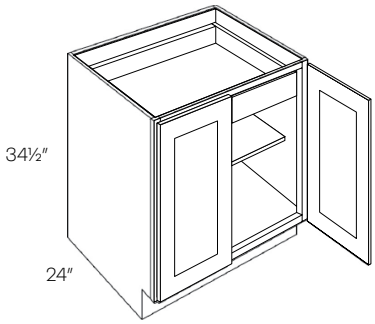

Full Height POD

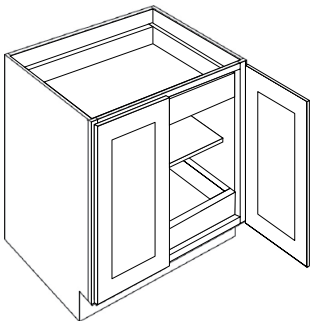

Full Height POD, 1 POS

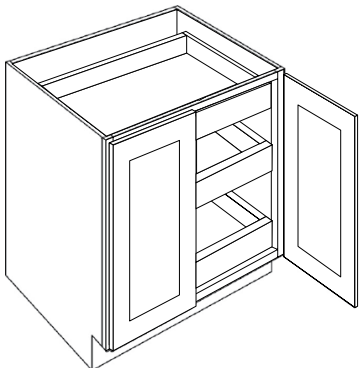

Full Height POD, 2 POS

Item Number	A	B	C	Plus Program D	M	N	O	P
B24-FH-POD	1343	1400	1456	1588	1531	1599	1667	1730
B24-FH-POS1-POD	1746	1803	1859	1991	1934	2002	2070	2133
B24-FH-POS2-POD	1746	1803	1859	2394	2337	2405	2473	2536
B27-FH-POD	1444	1506	1568	1712	1650	1724	1798	1868
B27-FH-POS1-POD	1859	1921	1983	2127	2065	2139	2213	2283
B27-FH-POS2-POD	1859	1921	1983	2542	2480	2554	2628	2698

Double Drawer & Door Base Cabinet

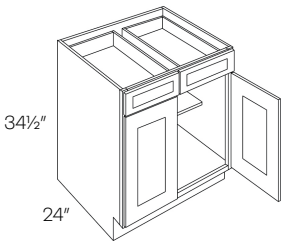

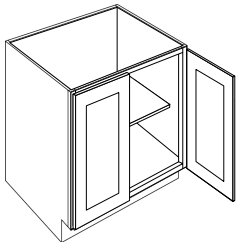

Full Height

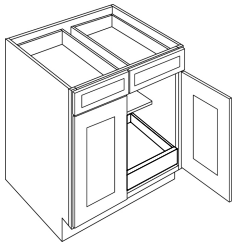

1 POS

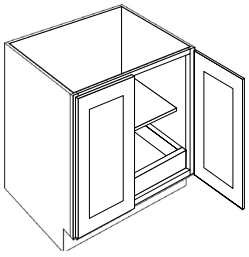

Full Height, 1 POS

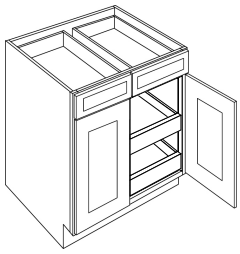

2 POS

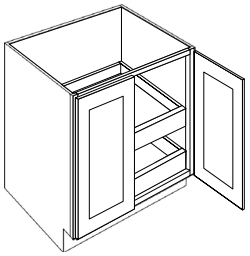

Full Height, 2 POS

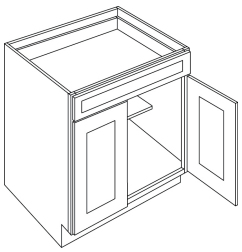

Single Drawer Front

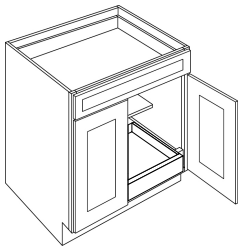

Single Drawer Front POS 1

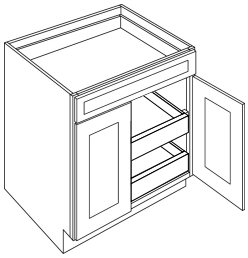

Single Drawer Front POS 2

	Plus Program							
Item Number	A	B	C	D	M	N	O	P
B30	1167	1238	1308	1471	1401	1485	1569	1647
B33	1238	1313	1387	1560	1486	1575	1664	1748
B36	1294	1372	1450	1631	1553	1646	1740	1827
B39	1366	1448	1530	1722	1640	1738	1836	1928
B42	1443	1530	1617	1819	1732	1836	1940	2037
B30-FH	1167	1238	1308	1471	1401	1485	1569	1647
B33-FH	1238	1313	1387	1560	1486	1575	1664	1748
B36-FH	1294	1372	1450	1631	1553	1646	1740	1827
B39-FH	1366	1448	1530	1722	1640	1738	1836	1928
B42-FH	1443	1530	1617	1819	1732	1836	1940	2037
B30-POS1	1595	1666	1736	1899	1829	1913	1997	2075
B33-POS1	1681	1756	1830	2003	1929	2018	2107	2191
B36-POS1	1761	1839	**1917**	2098	2020	2113	2207	2294
B42-POS1	1928	2015	2102	2304	2217	2321	2425	2522
B30-FH-POS1	1595	1666	1736	1899	1829	1913	1997	2075
B33-FH-POS1	1681	1756	1830	2003	1929	2018	2107	2191
B36-FH-POS1	1761	1839	1917	2098	2020	2113	2207	2294
B42-FH-POS1	1928	2015	2102	2304	2217	2321	2425	2522
B30-POS2	2023	2094	2164	2327	2257	2341	2425	2503
B33-POS2	2124	2199	2273	2446	2372	2461	2550	2634
B36-POS2	2228	2306	**2384**	**2565**	2487	2580	2674	2761
B42-POS2	2413	2500	2587	2789	2702	2806	2910	3007
B30-FH-POS2	2023	2094	2164	2327	2257	2341	2425	2503
B33-FH-POS2	2124	2199	2273	2446	2372	2461	2550	2634
B36-FH-POS2	2228	2306	2384	2565	2487	2580	2674	2761
B42-FH-POS2	2413	2500	2587	2789	2702	2806	2910	3007
B30-SDF	1167	1238	1308	1471	1401	1485	1569	1647
B33-SDF	1238	1313	1387	1560	1486	1575	1664	1748
B36-SDF	1294	1372	1450	1631	1553	1646	1740	1827
B30-SDF-POS1	1595	1666	1736	1899	1829	1913	1997	2075
B33-SDF-POS1	1681	1756	1830	2003	1929	2018	2107	2191
B36-SDF-POS1	1761	1839	1917	2098	2020	2113	2207	2294
B30-SDF-POS2	2023	2094	2164	2327	2257	2341	2425	2503
B33-SDF-POS2	2124	2199	2273	2446	2372	2461	2550	2634
B36-SDF-POS2	2228	2306	2384	2565	2487	2580	2674	2761

- Undermount soft close glides for POS
- POS has natural finish

Double Drawer Double Door Base Cabinet W/ POD

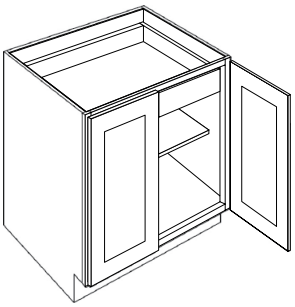

Full Height POD

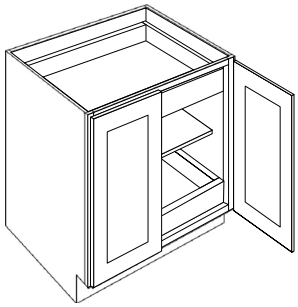

Full Height POD, 1 POS

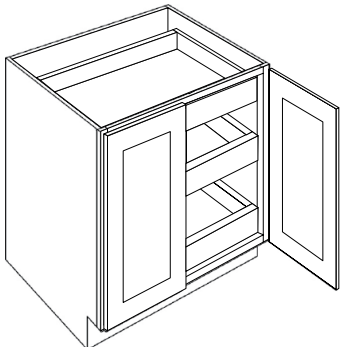

Full Height POD, 2 POS

Item Number	Plus Program A	B	C	D	M	N	O	P
B30-FH-POD	1595	1666	1736	1899	1829	1913	1997	2075
B30-FH-POS1-POD	2023	2094	2164	2327	2257	2341	2425	2503
B30-FH-POS2-POD	2023	2094	2164	2755	2685	2769	2853	2931
B33-FH-POD	1681	1756	1830	2003	1929	2018	2107	2191
B33-FH-POS1-POD	2124	2199	2273	2446	2372	2461	2550	2634
B33-FH-POS2-POD	2124	2199	2273	2889	2815	2904	2993	3077
B36-FH-POD	1761	1839	1917	2098	2020	2113	2207	2294
B36-FH-POS1-POD	2228	2306	2384	2565	2487	2580	2674	2761
B36-FH-POS2-POD	2228	2306	2384	3032	2954	3047	3141	3228
B42-FH-POD	1928	2015	2102	2304	2217	2321	2425	2522
B42-FH-POS1-POD	2413	2500	2587	2789	2702	2806	2910	3007
B42-FH-POS2-POD	2413	2500	2587	3274	3187	3291	3395	3492

Double Drawer & 4 Door Base Cabinet

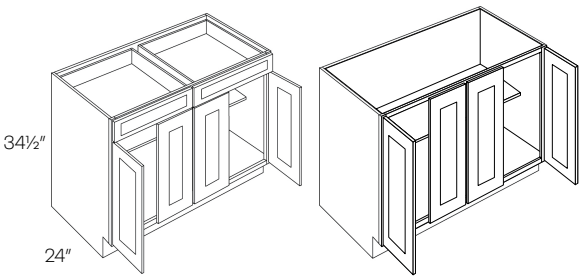

Full Height

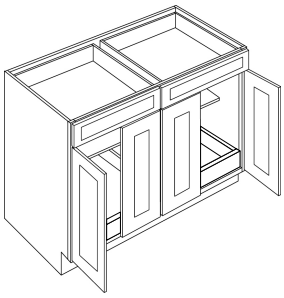

2 POS

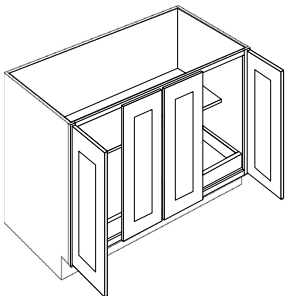

Full Height 2 POS

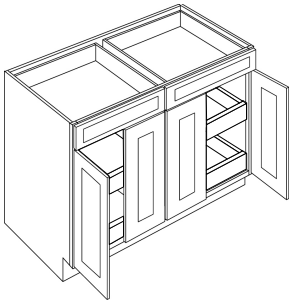

4 POS

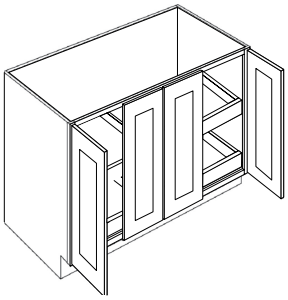

Full Height 4 POS

Item Number	Plus Program A	B	C	D	M	N	O	P
B48	1599	1695	1791	2015	1919	2034	2150	2257
B48-FH	1599	1695	1791	2015	1919	2034	2150	2257
B48-POS2 (Has 2 POS)	4423	4519	4615	4839	4743	4858	4974	5081
B48-FH-POS2 (Has 2 POS)	4423	4519	4615	4839	4743	4858	4974	5081
B48-POS4	5835	5931	6027	6251	6155	6270	6386	6493
B48-FH-POS4	5835	5931	6027	6251	6155	6270	6386	6493

- Undermount soft close glides for POS
- POS has natural finish

Double Drawer & 4 Door Base Cabinet W/ POD

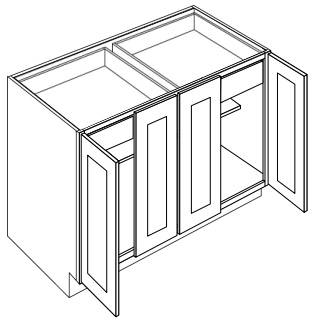

Full Height POD

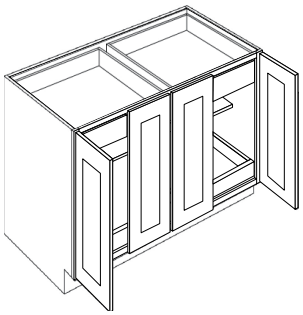

Full Height POD, 2 POS

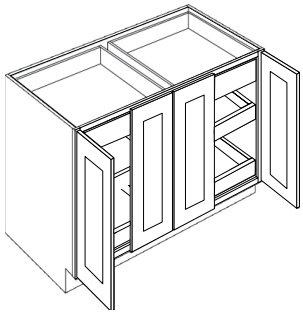

Full Height POD, 4 POS

		Plus Program						
Item Number	A	B	C	D	M	N	O	P
B48-FH,POD	2305	2401	2497	3427	3331	3446	3562	3669
B48-FH-POS2-POD	4423	4519	4615	4839	4743	4858	4974	5081
B48-FH-POS4-POD	5835	5931	6027	6251	6155	6270	6386	6493

2 Drawer Base Cabinet

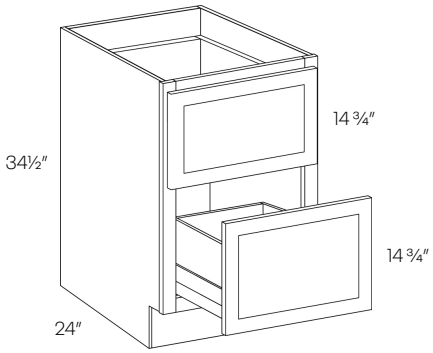

Item Number	A	B	C	Plus Program D	M	N	O	P
DB24-2	1278	1355	1432	1611	1534	1626	1718	1804
DB30-2	1379	1462	1545	1738	1655	1755	1854	1947
DB33-2	1447	1534	1621	1824	1737	1841	1945	2043
DB36-2	1505	1596	1686	1897	1806	1915	2023	2124

• Height of drawers is 11″

2 Drawer Base Cabinet W/ POD

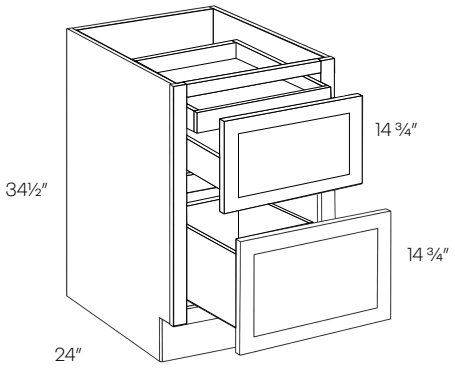

DB24-2-POD	1681	1758	1835	2820	2743	2835	2927	3013
DB30-2-POD	1807	1890	1973	3022	2939	3039	3138	3231
DB33-2-POD	1890	1977	2064	3153	3066	3170	3274	3372
DB36-2-POD	1972	2063	2153	3298	3207	3316	3424	3525

• Standard height of drawers is 11″
• Top drawer walls are cut down to 7″ for POD

3 Drawer Base Cabinet

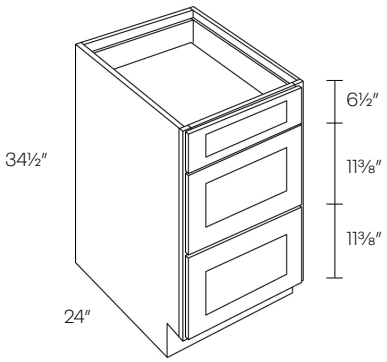

DB12	1122	1190	1257	1414	1347	1428	1508	1584
DB15	1168	1239	1309	1472	1402	1486	1570	1649
DB18	1199	1271	1343	1511	1439	1526	1612	1693
DB21	1237	1312	1386	1559	1485	1574	1663	1746
DB24	1278	1355	1432	1611	1534	1626	1718	1804
DB27	1342	1423	1504	1691	1611	1708	1804	1894
DB30	1379	1462	1545	1738	1655	1755	1854	1947
DB33	1447	1534	1621	1824	1737	1841	1945	2043
DB36	1505	1596	1686	1897	1806	1915	2023	2124

4 Drawer Base Cabinet

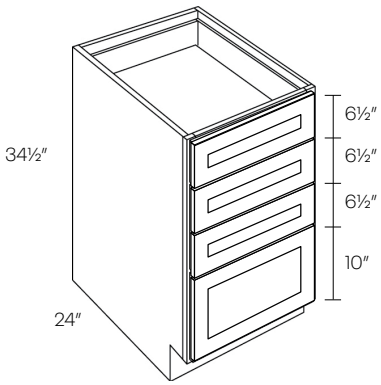

Item Number	A	B	C	Plus Program D	M	N	O	P
DB12-4	1324	1404	1483	1669	1589	1685	1780	1869
DB15-4	1379	1462	1545	1738	1655	1755	1854	1947
DB18-4	1417	1503	1588	1786	1701	1803	1905	2000
DB21-4	1464	1552	1640	1845	1757	1863	1968	2066
DB24-4	1508	1599	1689	1901	1810	1919	2027	2129

• Not available in Park Ave

Blind Base Cabinet

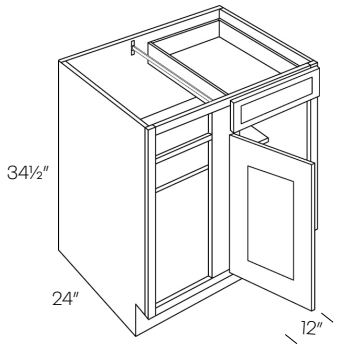

BLB36/39	1227	1301	1375	1547	1473	1561	1650	1732
BLB39/42	1260	1336	1412	1588	1512	1603	1694	1779
BLB42/45	1349	1430	1511	1700	1619	1716	1814	1904
BLB45/48	1467	1556	1644	1849	1761	1867	1972	2071
BLB48/51	1578	1673	1768	1989	1894	2008	2121	2227

• Reversible Left or Right
• Must be pulled to the minimum position
* Left blind shown

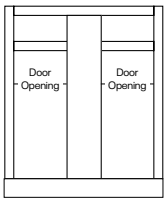

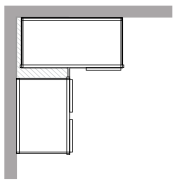

Cabinet	Min. Pull	Max. Pull	Actual Size	Door(s)	Door Opening
BLB36/39	36″	39″	27″	B9	6″
BLB39/42	39″	42″	33″	B12	9″
BLB42/45	42″	45″	39″	B15	12″
BLB45/48	45″	48″	42″	B18	15″
BLB48/51	48″	51″	48″	B39	16.6″

Full Height Blind Base Cabinet

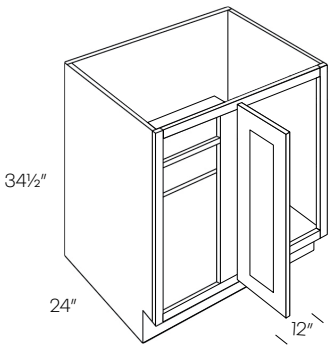

Full Height Door

BLB36/39-FH	1227	1301	1375	1547	1473	1561	1650	1732
BLB39/42-FH	1260	1336	1412	1588	1512	1603	1694	1779
BLB42/45-FH	1349	1430	1511	1700	1619	1716	1814	1904
BLB45/48-FH	1467	1556	1644	1849	1761	1867	1972	2071
BLB48/51-FH	1578	1673	1768	1989	1894	2008	2121	2227

• Reversible Left or Right
• Must be pulled to the minimum position
* Left blind shown

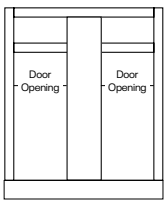

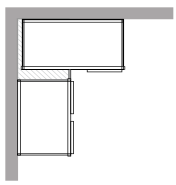

Cabinet	Min. Pull	Max. Pull	Actual Size	Door(s)	Door Opening
BLB36/39-FH	36″	39″	27″	B9	6″
BLB39/42-FH	39″	42″	33″	B12	9″
BLB42/45-FH	42″	45″	39″	B15	12″
BLB45/48-FH	45″	48″	42″	B18	15″
BLB48/51-FH	48″	51″	48″	B39	16.6″

Item Number	Plus Program A	B	C	D	M	N	O	P
Diagonal Corner Sink Base Cabinet								
CSB36	1731	1835	1939	2182	2078	2202	2327	2443

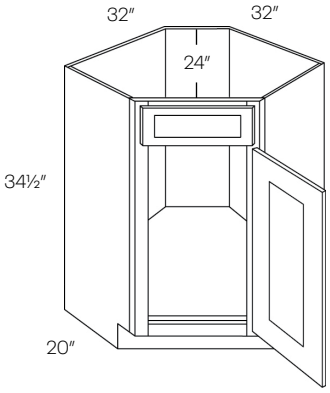

• Requires 36″ X 36″ wall space

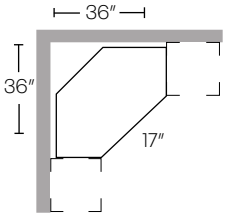

Diagonal Corner Sink Front								
CSF36*	496	496	496	625	596	596	596	625
CSFFL36 (Floor)	173	173	173	218	208	208	208	218

*Requires 36″ X 36″ wall space
*Requires a floor (sold separately)

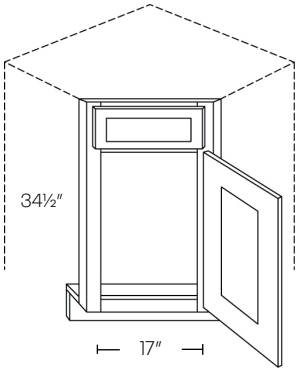

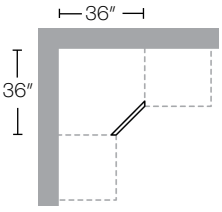

Easy Reach Corner Base Cabinet								
ER36R	1968	2087	2205	2480	2362	2504	2645	2778
ER36L	1968	2087	2205	2480	2362	2504	2645	2778

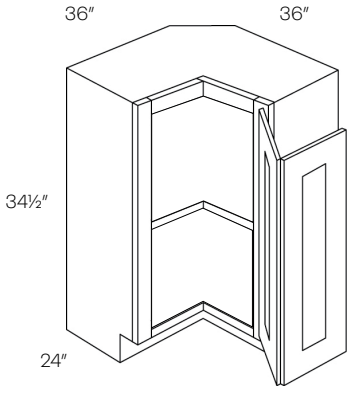

• Requires 36″ X 36″ wall space

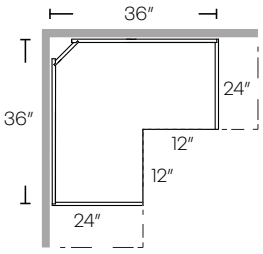

Base Square Corner Cabinet

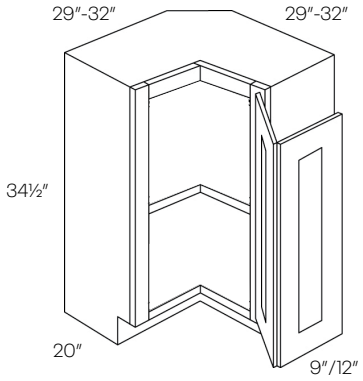

Item Number	A	B	C	Plus Program D	M	N	O	P
BSQC33R	1779	1886	1993	2242	2135	2263	2391	2511
BSQC33L	1779	1886	1993	2242	2135	2263	2391	2511
BSQC36R	1779	1886	1993	2242	2135	2263	2391	2511
BSQC36L	1779	1886	1993	2242	2135	2263	2391	2511

- Requires 33″ X 33″ / 36″ X 36″ wall space

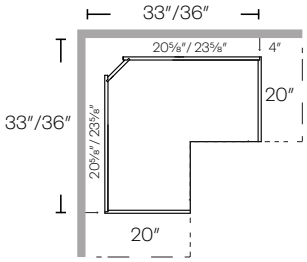

Lazy Susan Corner Base Cabinet

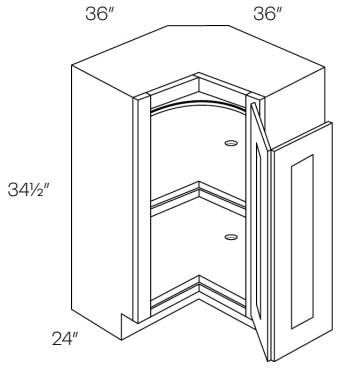

LS36R	2303	2442	2580	2902	2764	2930	3096	3250
LS36L	2303	2442	2580	2902	2764	2930	3096	3250

- Requires 36″ X 36″ wall space
- Pie is 2″ X 12″
- Wooden Lazy Susan

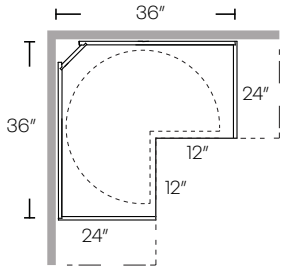

Carousel Corner Base Cabinet

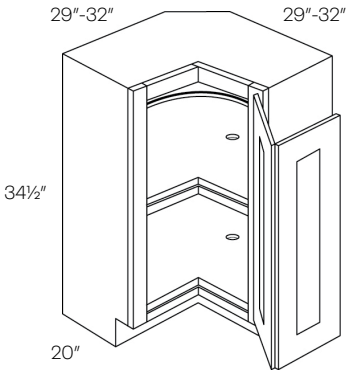

CAR33R	2303	2442	2580	2902	2764	2930	3096	3250
CAR33L	2303	2442	2580	2902	2764	2930	3096	3250
CAR36R	2303	2442	2580	2902	2764	2930	3096	3250
CAR36L	2303	2442	2580	2902	2764	2930	3096	3250

- Requires 33″ X 33″ / 36″ X 36″ wall space
- Pie is 9″ X 9″ / 12″ X 12″
- Wooden Lazy Susan

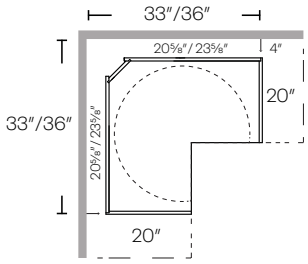

1 Drawer Front 2 Door Sink Base Cabinet

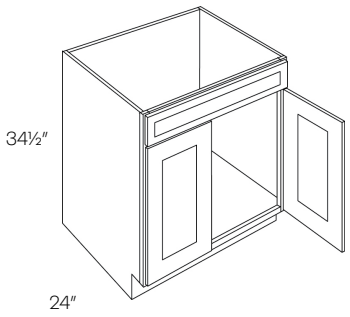

Item Number	A	B	C	Plus Program D	M	N	O	P
SB24	867	920	972	1093	1041	1103	1166	1224
SB27	936	993	1049	1180	1124	1191	1258	1321
TOT*	243	243	243	243	243	243	243	243

* Factory Installed

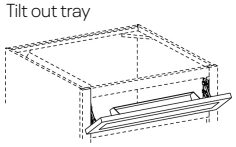

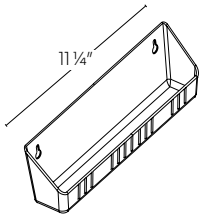

Double Drawer Front 2 Door Sink Base Cabinet

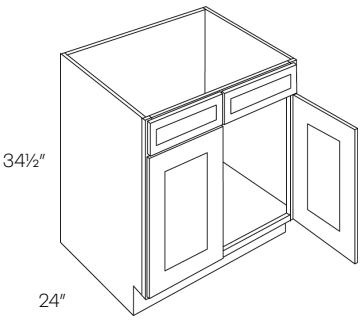

SB30	991	1051	1110	1249	1190	1261	1332	1399
SB33	1059	1123	1187	1335	1271	1348	1424	1495
SB36	1070	1135	1199	1349	1284	1362	1439	1510
SB39	1141	1210	1278	1438	1370	1452	1534	1611
SB42	1168	1239	1309	1472	1402	1486	1570	1649
TOT*	243	243	243	243	243	243	243	243

*Factory Installed
*Cabinets include two 11¼″ tilt out trays

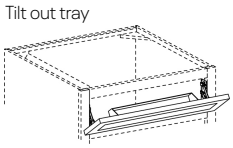

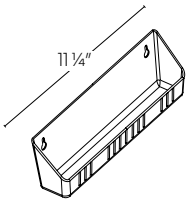

1 Drawer Front 2 Door Sink Base Cabinet

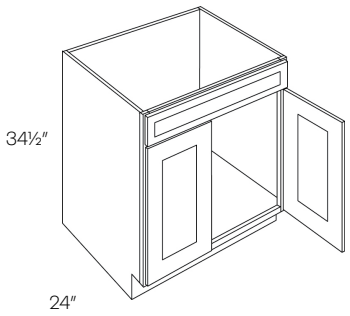

SB30-SDF	**991**	1051	1110	1249	1190	1261	1332	1399
SB33-SDF	1071	1124	1180	1349	1285	1349	1416	1487
SB36-SDF	1059	1123	1187	1335	1271	1348	1424	1495
TOT*	243	243	243	243	243	243	243	243

* Factory Installed

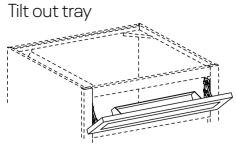

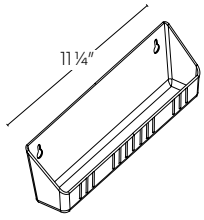

Double Drawer Front 4 Door Sink Base Cabinet

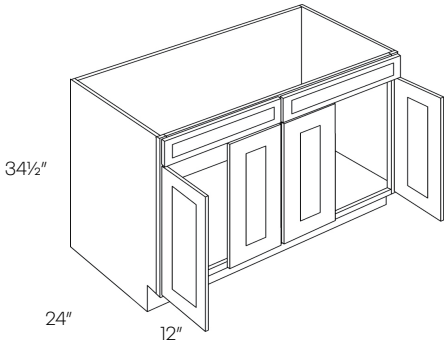

Item Number	A	B	C	Plus Program D	M	N	O	P
SB48	1306	1385	1463	1646	1568	1662	1756	1844

Double Door Farm Sink Base Cabinet

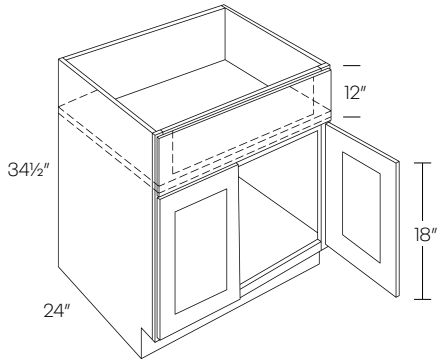

SB30-FS	1106	1172	1239	1394	1327	1407	1486	1561
SB33-FS	1179	1249	1320	1485	1414	1499	1584	1663
SB36-FS	1190	1262	1333	1499	1428	1514	1599	1679

- Max trimmable 27″/30″/33″ X 10″
- Trimming to be done in field
- Has a fixed platform

Double Door Handicap Removable Sink Base Cabinet

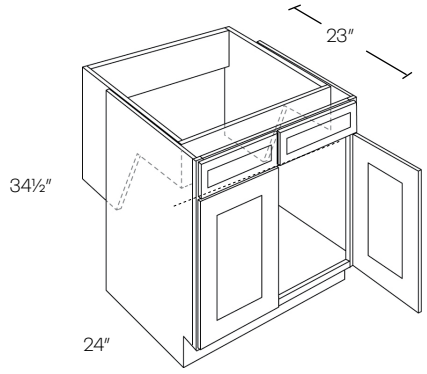

SB30-HR	1388	1471	1554	1749	1665	1765	1865	1958
SB33-HR	1483	1572	1661	1869	1780	1886	1993	2093
SB36-HR	1498	1588	1678	1888	1798	1906	2014	2114

* Factory Installed
**Not ADA compliant

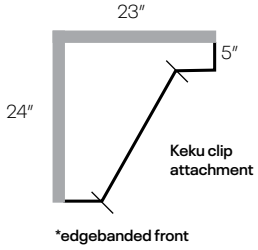

Oven Base & Microwave Base Cabinet

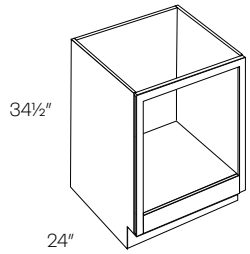

OVB

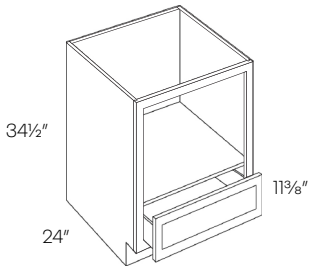

MCB

Item Number	A	B	C	Plus Program D	M	N	O	P
OVB30	760	806	852	958	912	967	1022	1073
MCB24	1278	1355	1432	1611	1534	1626	1718	1804
MCB24-TRM	279	279	279	352	335	335	335	352
MCB27	1328	1408	1488	1674	1594	1690	1785	1875
MCB27-TRM	307	307	307	387	369	369	369	387
MCB30*	1379	1462	1545	1738	1655	1755	1854	1947
MCB30-TRM	335	335	335	423	402	402	402	423

• OV front opening is 27″x27″
• MC front opening is
*Does not have finished interior

Cabinet	Front Opening Dimension
MCB24	21″ x 16″
MCB27	24″ x 16″
MCB30	27″ x 16″

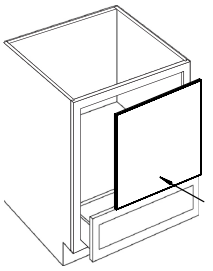

Trim Kit (TRM)
Keku clip attachment

Base End Cabinet

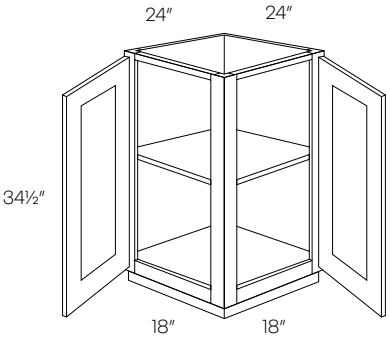

BEC24	875	928	981	1103	1050	1113	1176	1235

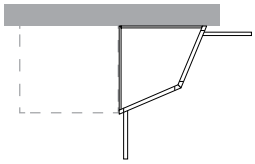

Straight Base End Cabinet

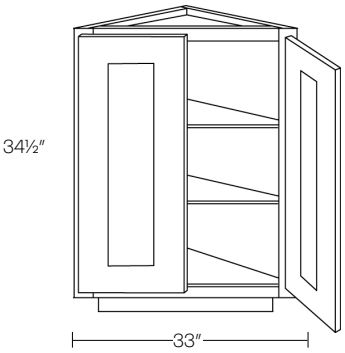

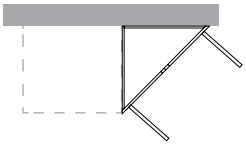

				Plus Program				
Item Number	A	B	C	D	M	N	O	P
BECS24	875	928	981	1103	1050	1113	1176	1235

Angle Base End Cabinet

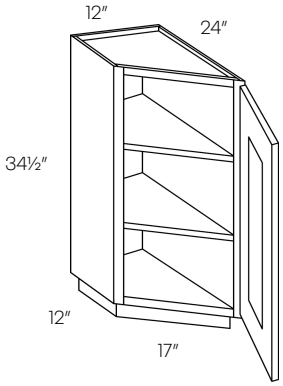

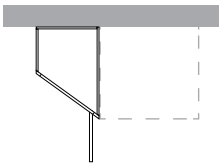

BTC2412	710	753	796	895	852	904	955	1002

- Reversible
- Loose toe kick
- Hinged on 24″

Base Spice Cabinet

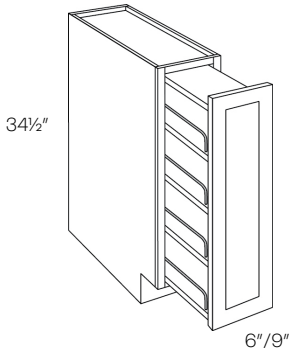

BSP6	589	625	660	743	707	750	792	832
BSP9	1199	1271	1343	1511	1439	1526	1612	1693

- Undermount soft close glides

Waste Basket Cabinet

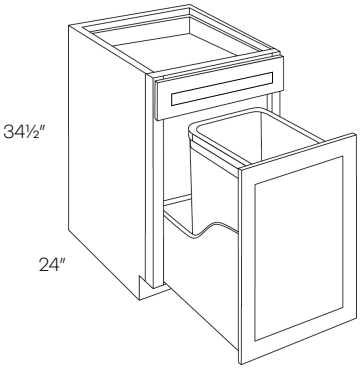

BWBK15

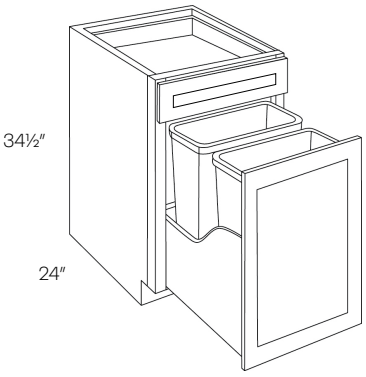

BWBK18

Item Number	A	B	C	Plus Program D	M	N	O	P
BWBK15 (Single basket)	1200	1272	1345	1512	1440	1527	1613	1694
BWBK18 (Double basket)	1272	1349	1425	1603	1527	1618	1710	1796

- Undermount soft-close hinges and glides
- Can reduce depth up to 21″
- Includes 35qt. waste basket (BK18 includes two waste baskets)
- Full Height Waste Basket includes two 50qt. waste baskets

Full Height Waste Basket Cabinet

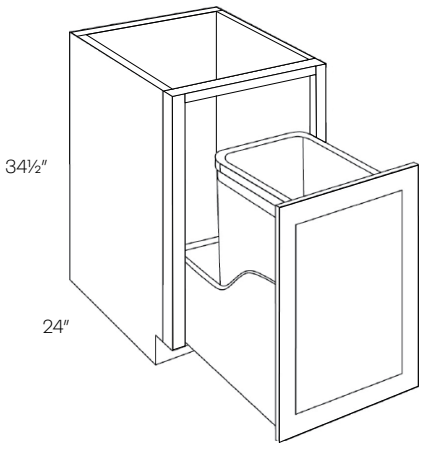

BWBK15-FH

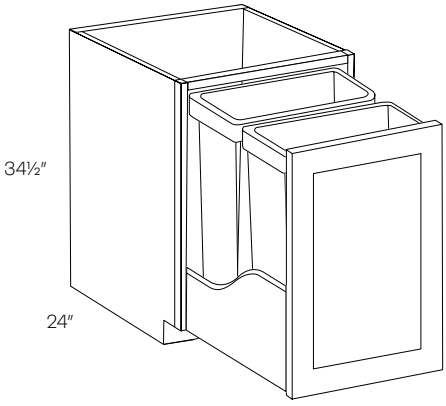

BWBK21-FH/ BWBK18-FH

Item Number	A	B	C	Plus Program D	M	N	O	P
BWBK15-FH (Single basket)	1200	1272	1345	1512	1440	1527	1613	1694
BWBK18-FH (Double basket)	1272	1349	1425	1603	1527	1618	1710	1796
BWBK21-FH	1555	1649	1742	1960	1866	1978	2090	2195

- Undermount soft-close hinges and glides
- Can reduce depth up to 21″
- Includes 35qt. waste basket (BK18 includes two waste baskets)
- Full Height Waste Basket includes two 50qt. waste baskets

Single Door Utility Cabinet

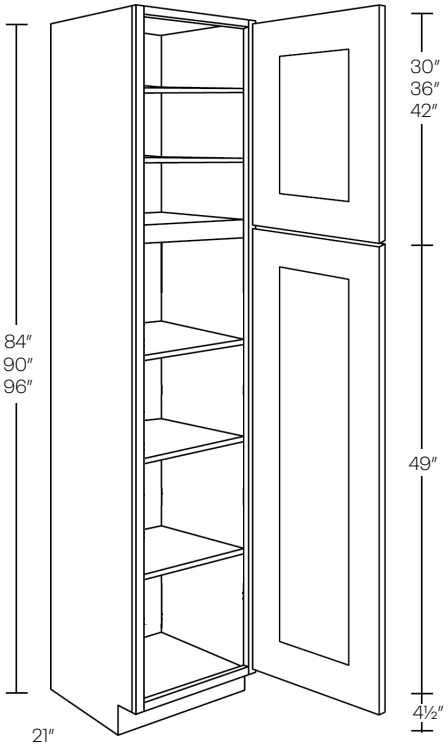

Item Number	Plus Program A	B	C	D	M	N	O	P
UC1521X84	2125	2253	2380	2678	2550	2703	2856	2999
UC1524X84	2125	2253	2380	2678	2550	2703	2856	2999
UC1524X90	2339	2480	2620	2948	2807	2976	3144	3301
UC1524X96*	2572	2727	2881	3241	3087	3272	3457	3630
UC1821X84	2238	2373	2507	2820	2686	2847	3008	3159
UC1824X84	2238	2373	2507	2820	2686	2847	3008	3159
UC1824X90	2344	2485	2626	2954	2813	2982	3151	3308
UC1824X96*	2708	2871	3033	3413	3250	3445	3640	3822
POS15-3 (factory installed)	993	993	993	993	993	993	993	993
POS15-4 (factory installed)	1324	1324	1324	1324	1324	1324	1324	1324
POS18-3 (factory installed)	1065	1065	1065	1065	1065	1065	1065	1065
POS18-4 (factory installed)	1420	1420	1420	1420	1420	1420	1420	1420

- POS price is addition to cabinet list price
- POS has natural finish
- 4 bottom adjustable shelves
- Fixed shelf between doors

*84″ and 90″ have 2 upper shelves
* 96″ has 3 upper shelves

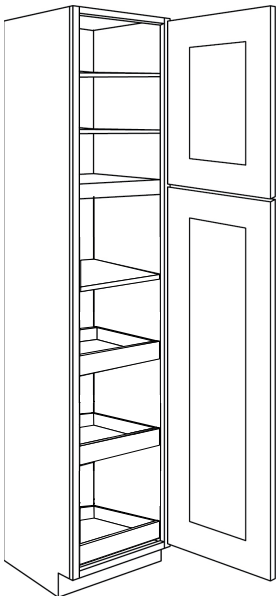

POS-3

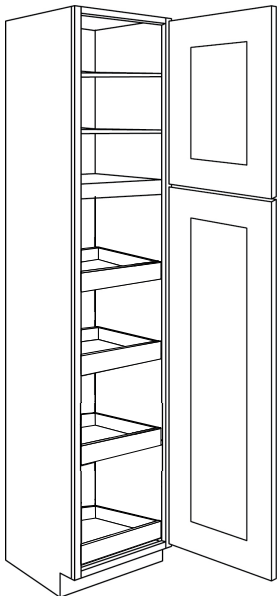

POS-4

Double Door Utility Cabinet

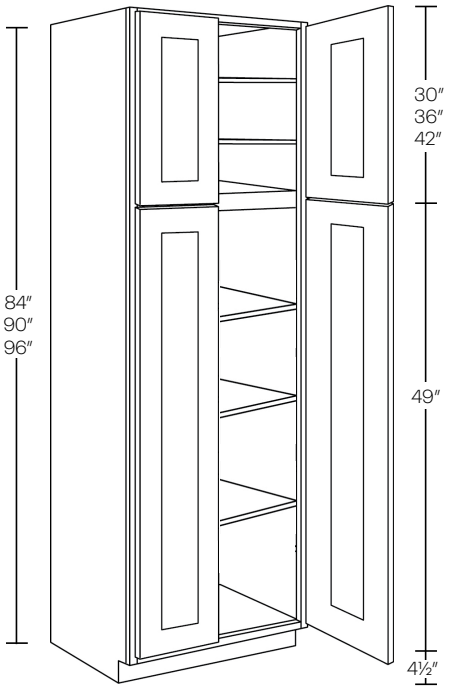

12″-24″

Item Number	A	B	C	Plus Program D	M	N	O	P
UC2412X84	2306	2445	2583	2906	2768	2934	3100	3255
UC2412X90	2537	2690	2842	3197	3045	3228	3410	3581
UC2412X96*	2790	2958	3125	3516	3348	3549	3750	3938
UC2424X84	2614	2771	2928	3294	3137	3326	3514	3689
UC2424X90	2877	3050	3223	3626	3453	3660	3867	4061
UC2424X96*	3165	3355	3545	3988	3798	4026	4254	4467
UC3024X84	2763	2929	3095	3482	3316	3515	3714	3900
UC3024X90	3166	3356	3546	3990	3800	4028	4256	4468
UC3024X96*	3478	3687	3896	4383	4174	4425	4675	4909
POS24-3 (factory installed)	1209	1209	1209	1209	1209	1209	1209	1209
POS24-4 (factory installed)	1612	1612	1612	1612	1612	1612	1612	1612
POS30-3 (factory installed)	1284	1284	1284	1284	1284	1284	1284	1284
POS30-4 (factory installed)	1712	1712	1712	1712	1712	1712	1712	1712

- POS price is addition to cabinet list price
- POS has natural finish
- 4 bottom adjustable shelves
- POS only available in 24″ deep

*84″ and 90″ have 2 upper shelves
* 96″ has 3 upper shelves

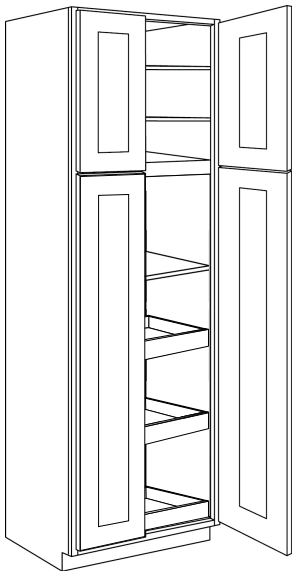

POS-3

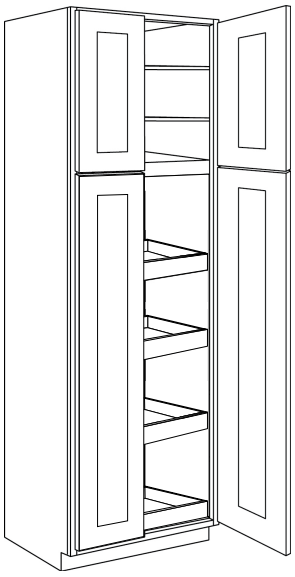

POS-4

Single Oven Cabinet

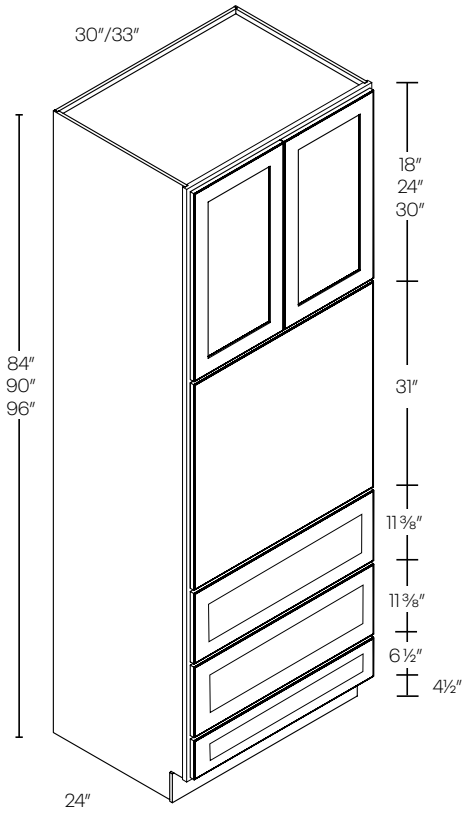

Item Number	A	B	C	Plus Program D	M	N	O	P
OV3084	2673	2834	2994	3368	3208	3401	3593	3773
OV3090	2840	3011	3181	3579	3408	3613	3817	4008
OV3096*	3004	3185	3365	3786	3605	3822	4038	4240
OV3384	2780	2947	3114	3503	3336	3537	3737	3924
OV3390	2953	3131	3308	3721	3544	3757	3969	4168
OV3396**	3124	3312	3499	3937	3749	3974	4199	4409

- Trim kit included
- Trimming to be done in field
- 84″ and 90″ has 1 upper shelves
- 96″ has 2 upper shelves
- Remove drawers and floor as needed
- Center panel included

*Maximum cut out width is 27″ wide on 30″
**Maximum cut out width is 30″ wide on 33″

Assembly

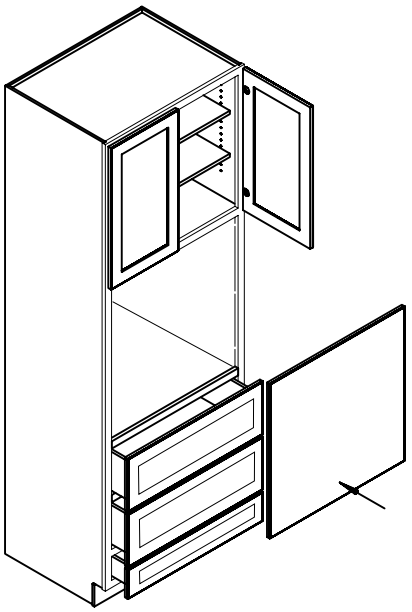

Side

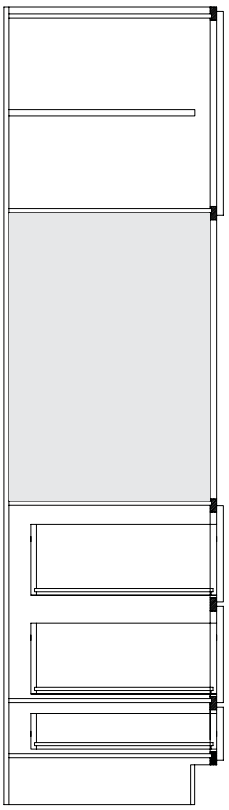

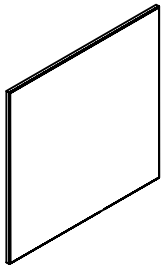

Trim Kit

Keku clip attachment
***Clips shipped loose**

Double Oven Cabinet

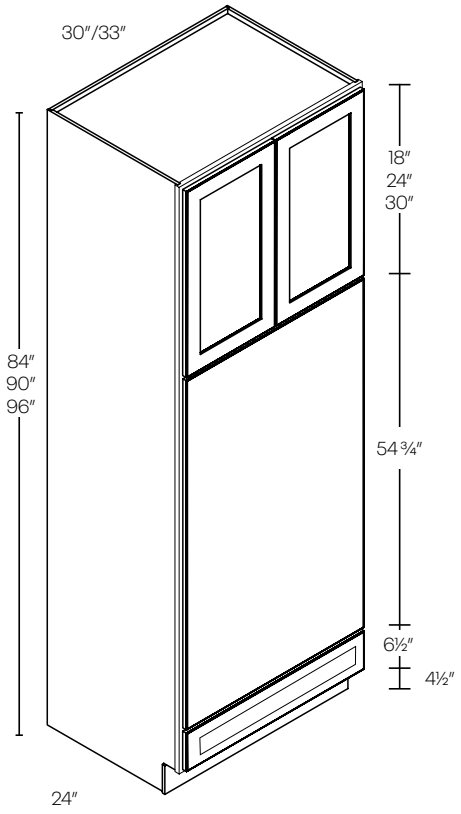

Item Number	A	B	C	Plus Program D	M	N	O	P
OVD3084	2673	2834	2994	3368	3208	3401	3593	3773
OVD3090	2840	3011	3181	3579	3408	3613	3817	4008
OVD3096*	3004	3185	3365	3786	3605	3822	4038	4240
OVD3384	2780	2947	3114	3503	3336	3537	3737	3924
OVD3390	2953	3131	3308	3721	3544	3757	3969	4168
OVD3396*	3124	3312	3499	3937	3749	3974	4199	4409

- Trim kit included
- Trimming to be done in field
- Shelves need to be adjusted and secured with screws
- 84″ ad 90″ has 1 upper shelves
- 96″ has 2 upper shelves
- Center panel included

*Maximum cut out width is 27″ wide on 30″
**Maximum cut out width is 30″ wide on 33″

Assembly

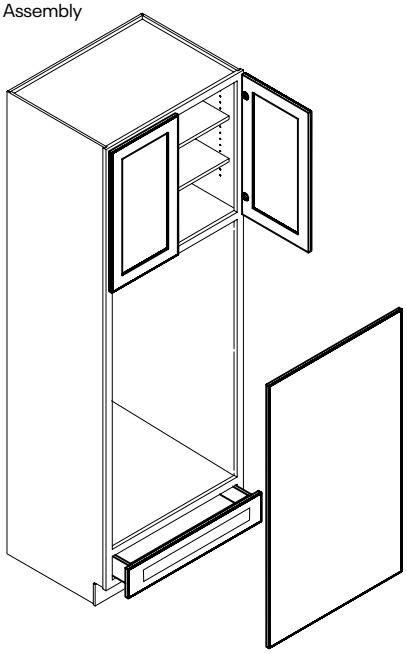

Side

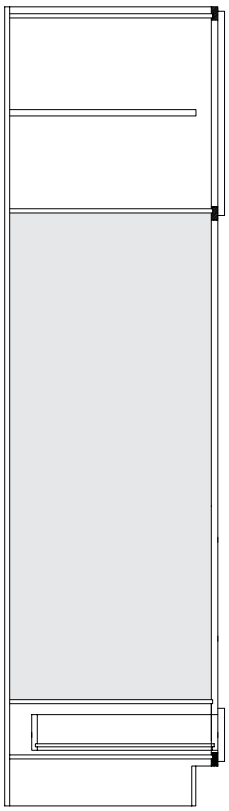

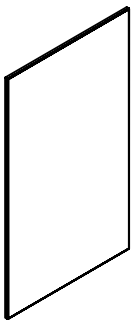

Trim Kit

Keku clip attachment
***Clips shipped loose**

Floating Shelves

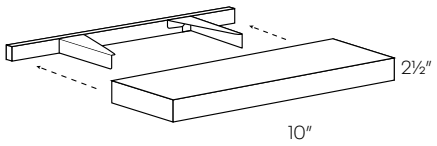

Item Number	Plus Program A	B	C	D	M	N	O	P
F-SHELF-24	539	539	539	680	647	647	647	680
F-SHELF-30	643	643	643	811	772	772	772	811
F-SHELF-36	745	745	745	939	894	894	894	939
F-SHELF-42	848	848	848	1069	1018	1018	1018	1069

• Mounting hardware included

Pull Out Shelf

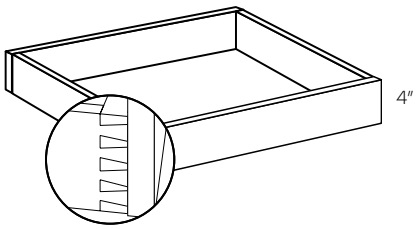

POS12	221	221	221	221	221	221	221	221
POS15	231	231	231	231	231	231	231	231
POS18	255	255	255	255	255	255	255	255
POS21	268	268	268	268	268	268	268	268
POS24	303	303	303	303	303	303	303	303
POS27	315	315	315	315	315	315	315	315
POS30	328	328	328	328	328	328	328	328
POS33	343	343	343	343	343	343	343	343
POS36	367	367	367	367	367	367	367	367
POS42	385	385	385	385	385	385	385	385

• Natural finish
• Undermount soft-close glides
• POS uses dovetail construction
•Two spacers required
• BLUM glides not available on POS

Wooden Cutlery Divider

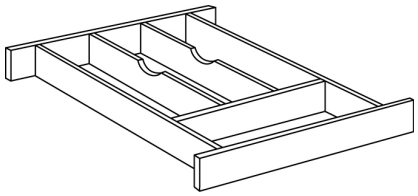

WCD-14
WCD-16
WCD-25
WCD-7

• To be trimmed on site
* Need to buy 2 pieces

WCD-14	B33*, B39*, BLB48/51
WCD-16	B15, B18, B21, B36*
WCD-25	B24, B27, DB30
WCD-7	B12, BLB39/42

Modern Wood Hood

Item Number	A	B	C	Plus Program D	M	N	O	P
WHM30	4110	4357	4604	5179	4932	5228	5524	5801
WHM36	4931	5227	5523	6214	5918	6273	6628	6959

•Metal Liners Included

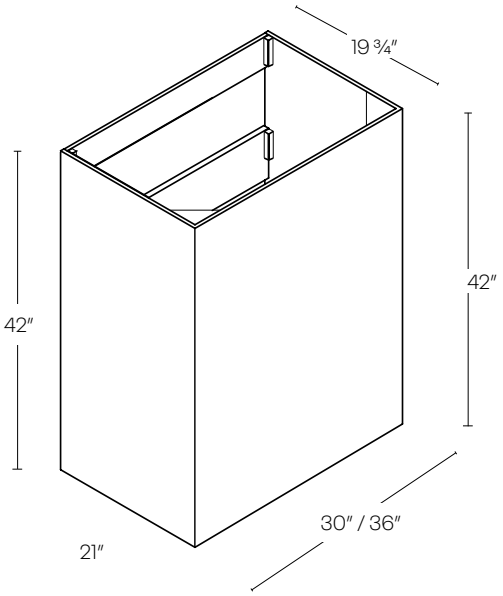

30″ Hood Liner

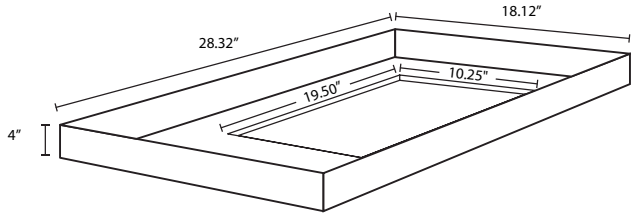

36″ Hood Liner

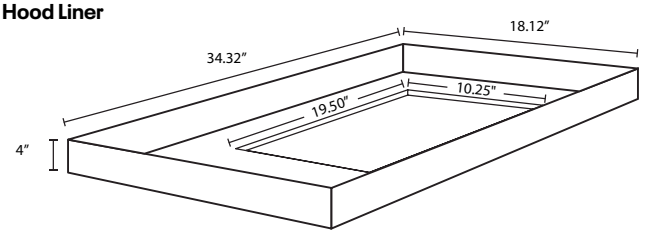

Boxed Wood Hood

WHB30	2788	2956	3123	3513	3346	3547	3748	3935
WHB36	3345	3546	3747	4215	4014	4255	4496	4721

•Metal Liners Included

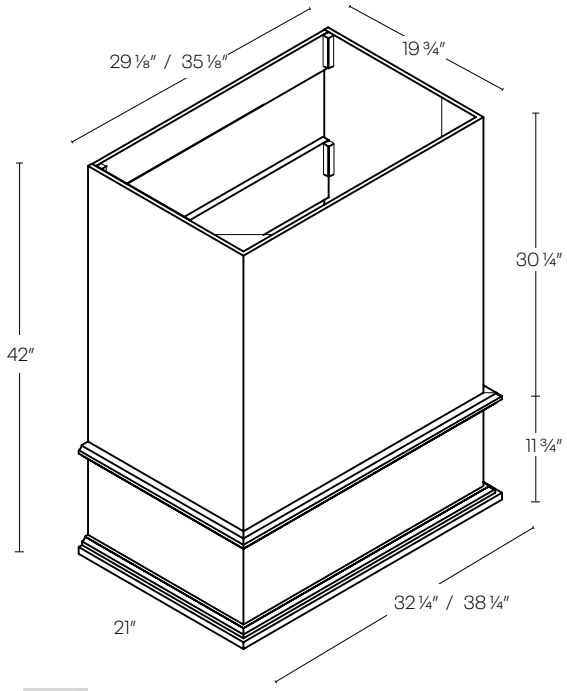

30″ Hood Liner

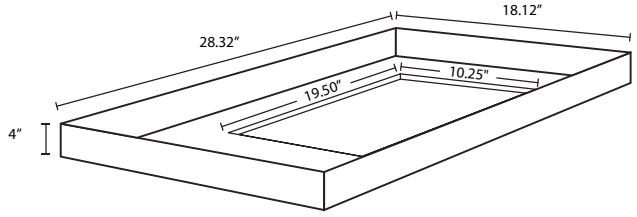

36″ Hood Liner

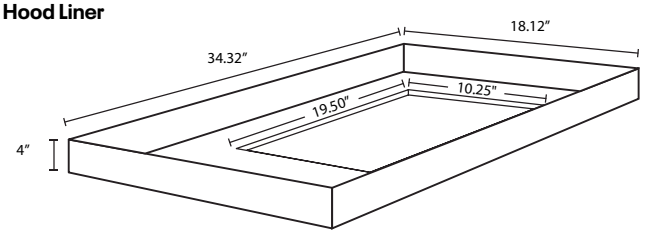

Coved Wood Hood

Item Number	A	B	C	Plus Program D	M	N	O	P
WHC30	2788	2956	3123	3513	3346	3547	3748	3935
WHC36	4931	5227	5523	6214	5918	6273	6628	6959

•Metal Liners Included

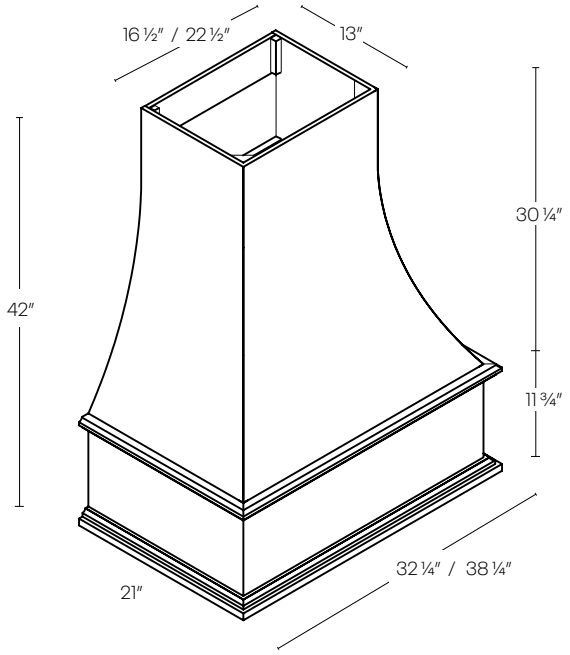

30″ Hood Liner

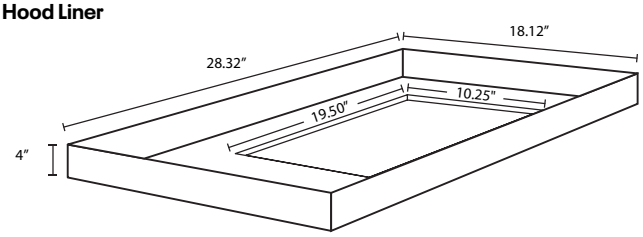

36″ Hood Liner

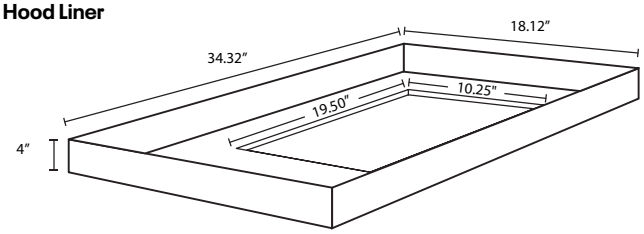

Sloped Wood Hood

WHS30	2788	**2956**	3123	3513	3346	3547	3748	3935
WHS36	**3345**	3546	3747	4215	4014	4255	4496	4721

•Metal Liners Included

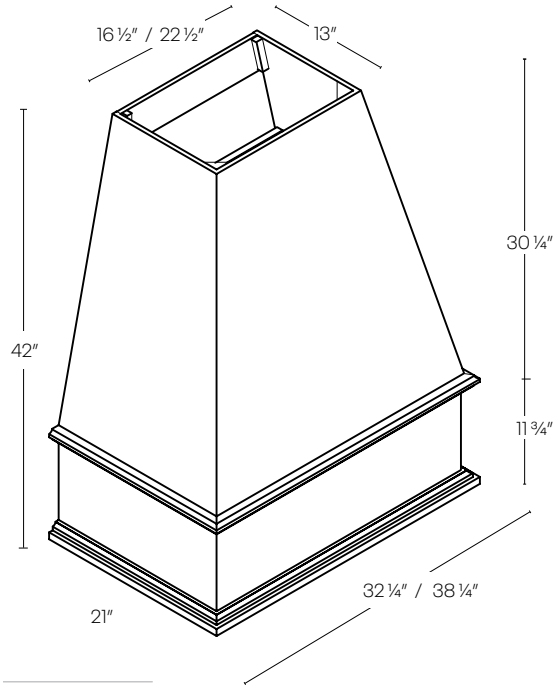

30″ Hood Liner

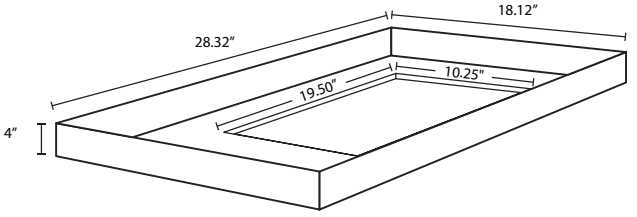

36″ Hood Liner

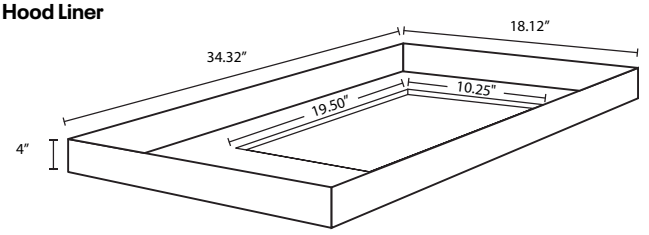

Traditional Wood Hood

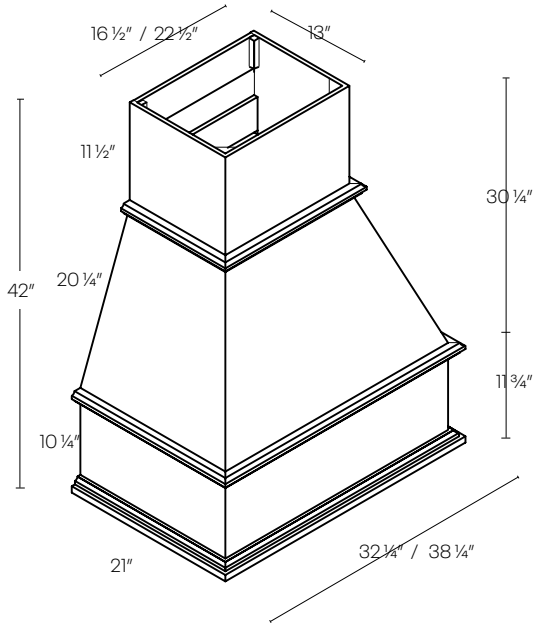

Item Number	A	B	C	Plus Program D	M	N	O	P
WHT30	2788	2956	3123	3513	3346	3547	3748	3935
WHT36	3345	3546	3747	4215	4014	4255	4496	4721

•Metal Liners Included

30″ Hood Liner

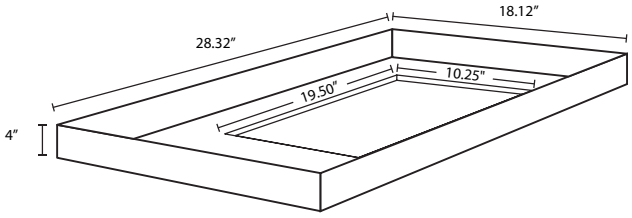

36″ Hood Liner

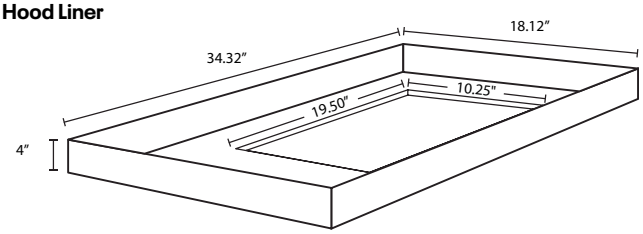

Single Door Vanity Base Cabinet

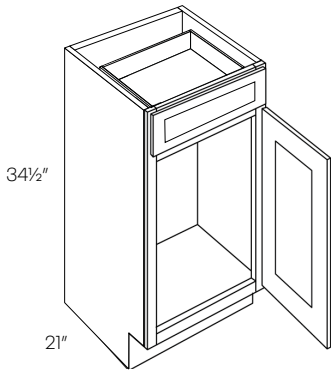

Double Door Vanity Sink Base Cabinet

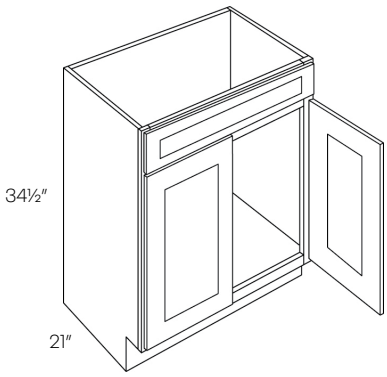

1 Door 2 Drawer Vanity Sink Base Cabinet

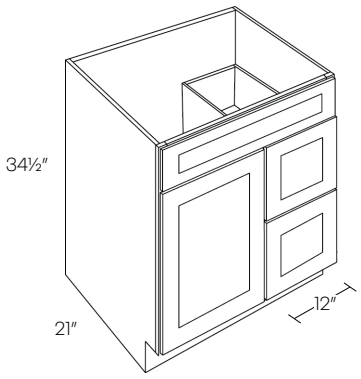

Item Number	A	B	C	Plus Program D	M	N	O	P
VB12	680	721	762	857	816	865	914	960
VB15	710	753	796	895	852	904	955	1002
VB18	643	682	721	811	772	818	865	908
V24	801	850	898	1010	962	1019	1077	1131
V27	855	907	958	1078	1026	1088	1150	1207
V30	908	963	1017	1145	1090	1155	1221	1282
V33	956	1014	1071	1205	1148	1217	1285	1350
V36	1004	1065	1125	1266	1205	1278	1350	1417
V42	1114	1181	1248	1404	1337	1418	1498	1573
V30DL	1278	1355	1432	1611	1534	1626	1718	1804
V30DR	1278	1355	1432	1611	1534	1626	1718	1804

• Right Drawer Shown

2 Door 2 Drawer Vanity Sink Base Cabinet

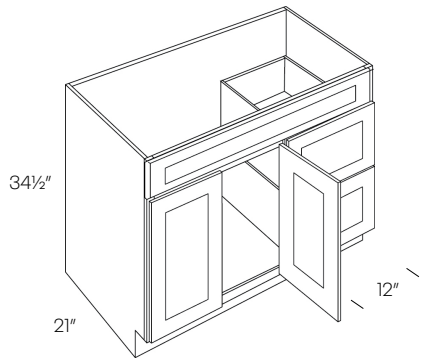

Item Number	A	B	C	Plus Program D	M	N	O	P
V36DL	1314	1393	1472	1656	1577	1672	1767	1855
V36DR	1314	1393	1472	1656	1577	1672	1767	1855
V42DL	1469	1558	1646	1851	1763	1869	1975	2074
V42DR	1469	1558	1646	1851	1763	1869	1975	2074

• Right Drawer Shown

Double Door 4 Drawer Vanity Sink Base Cabinet

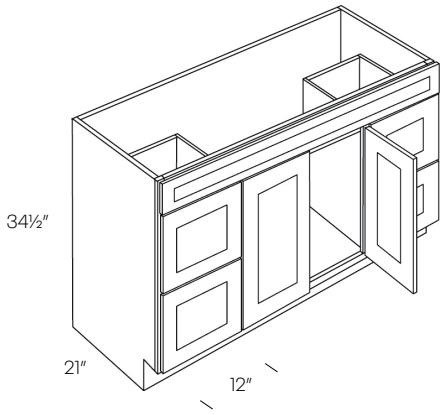

V48DD	1599	1695	1791	2015	1919	2034	2150	2257

Vanity Drawer Base Cabinet

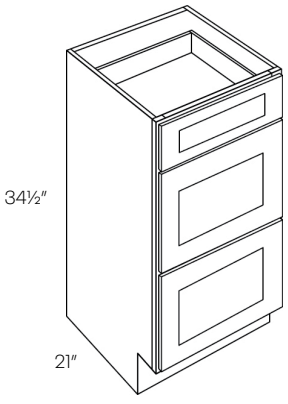

VDB12	1031	1083	1137	1300	1238	1300	1364	1433
VDB15	1093	1148	1205	1377	1312	1377	1446	1518
VDB18	1119	1175	1234	1410	1343	1410	1481	1555
VDB21	1139	1196	1256	1435	1367	1435	1507	1582
VDB24	1174	1233	1295	1479	1409	1479	1553	1631

Desk Cabinet

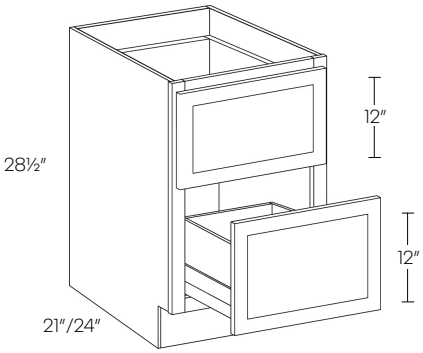

				Plus Program				
Item Number	A	B	C	D	M	N	O	P
DDC18x21	1081	1146	1211	1363	1298	1376	1453	1526
DDC18x24	1199	1271	1343	1511	1439	1526	1612	1693

• Does not hold files

Desk Drawer

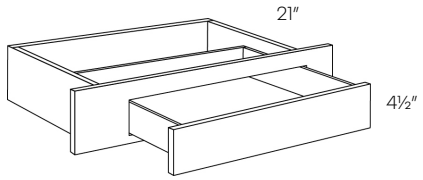

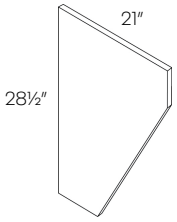

DD30	356	378	399	449	428	453	479	503
DS	227	227	227	287	273	273	273	287

• 2 ½″ trimmable sides
• Drawer front is 22 ½″ wide
• Slab drawer front
• DS is 21″

Finished Skin

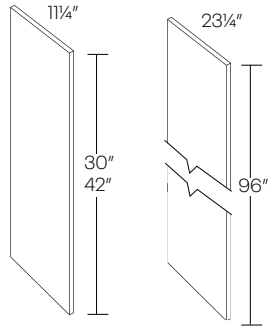

FS30/FS42 FS9624

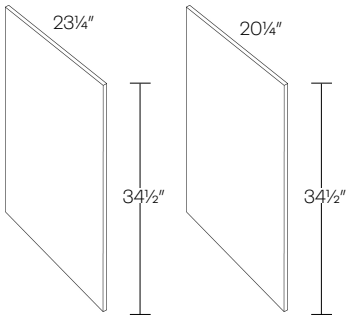

FSB FSV

Item Number	A	B	C	Plus Program D	M	N	O	P
FS30	120	120	120	152	144	144	144	152
FS42	167	167	167	211	201	201	201	211
FS9624	316	316	316	399	380	380	380	399
FSB	155	155	155	196	186	186	186	196
FSV	154	154	154	195	185	185	185	195

• ¼″ Thick

Plywood Panel

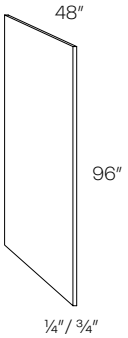

PLY4X8	458	458	458	578	550	550	550	578
PLY4X8X.75	1476	1476	1476	1860	1772	1772	1772	1860

• Ply4x8 is finished on one side
• Ply4x8..75 is finished on two sides
• Plys4x8x.75 finished on one long edge

Refrigerator End Panel

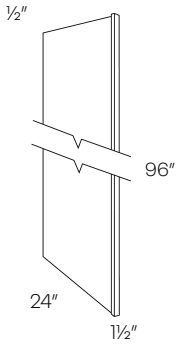

REP1

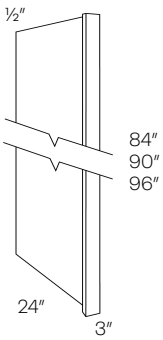

REP3

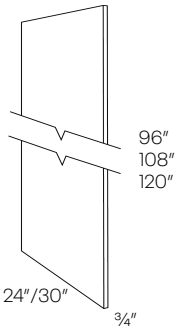

UREP

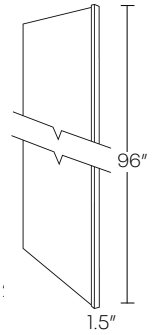

UREP 1.5x96x27

Item Number	A	B	C	Plus Program D	M	N	O	P
REP196	578	578	578	729	694	694	694	729
REP384	525	525	525	662	630	630	630	662
REP390	551	551	551	695	662	662	662	695
REP396	578	578	578	729	694	694	694	729
UREP24	403	403	403	508	484	484	484	508
UREP30	536	536	536	676	644	644	644	676
UREP24-9	453	453	453	571	544	544	544	571
UREP30-9	603	603	603	760	724	724	724	760
UREP24-10	510	510	510	643	612	612	612	643
UREP30-10	678	678	678	855	814	814	814	855
UREP1.5x96x27	603	603	603	760	724	724	724	760
UREP1.5x96x30	669	669	669	843	803	803	803	843

• Finished on both sides

Dishwasher Return Panel

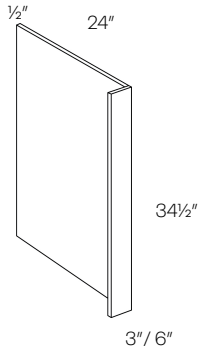

DWR

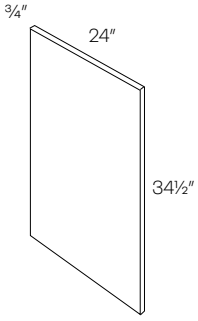

BEP

DWR1	304	304	304	384	365	365	365	384
DWR3	304	304	304	384	365	365	365	384
DWR6	337	337	337	425	408	405	405	425
BEP	266	266	266	336	320	320	320	336

• Finished on both sides

Full Overlay Crown Moldings

Item Number	Plus Program A	B	C	D	M	N	O	P
MFLOCR	443	443	443	559	532	532	532	559

• 8 Feet long

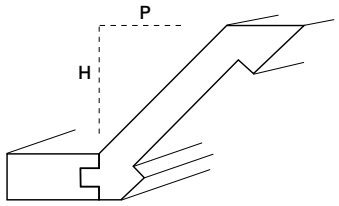

MFLOCR
Height: 3½″
Projection: 2½″

Royal Crown Molding

RCRM	443	443	443	N/A	532	532	532	N/A
RCRMS	443	443	443	N/A	532	532	532	N/A
RCRMC	443	443	443	559	532	532	532	559
RCRMR	443	443	443	559	532	532	532	559

• 8 Feet long

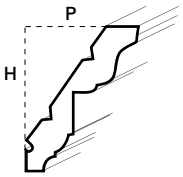

RCRM
Height: 3½″
Projection: 2½″

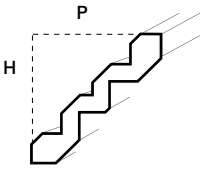

STEP
RCRMS
Height: 3⅛″
Projection: 3⅛″

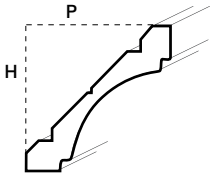

COVE
RCRMC
Height: 3⅛″
Projection: 3⅛″

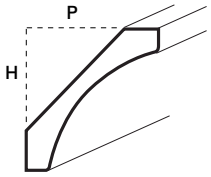

ROUND
RCRMR
Height: 3 ¼″
Projection: 3 ¼″

Light Rail Molding

LTRM1	231	231	231	292	278	278	278	292
LTRM2	260	260	260	328	312	312	312	328
LTRM3	346	346	346	436	416	416	416	436
LTRM	307	307	307	N/A	369	369	369	N/A
LTRMS	307	307	307	N/A	369	369	369	N/A

• 8 Feet long

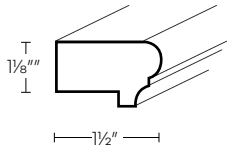

LTRM1

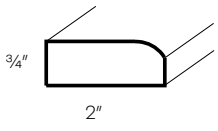

LTRM2

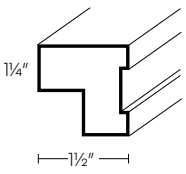

LTRM3

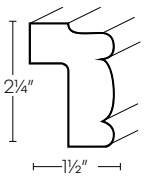

LTRM

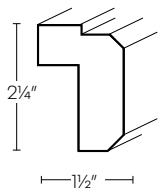

LTRMS

	Item Number	Plus Program A	B	C	D	M	N	O	P
Shoe Molding	**SHM**	133	133	133	168	160	160	160	168

• 8 Feet long

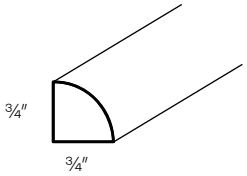

Crown Moldings	**CRM**	158	158	158	N/A	190	190	190	N/A
	CRMS	158	158	158	N/A	190	190	190	N/A

• 8 Feet long

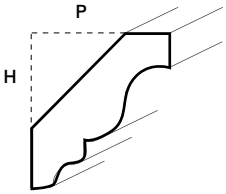

CRM
Height: 2″
Projection: 2″

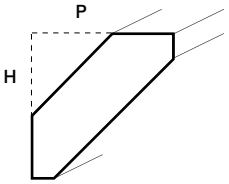

CRMS
Height: 2″
Projection: 2″

Trim Molding	**TBMS**	145	145	145	183	174	174	174	183

• 8 Feet long

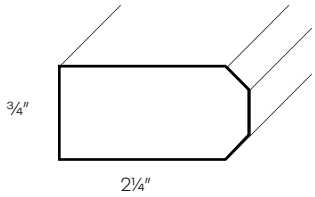

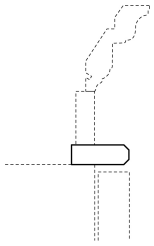

*Suggested use

Corner Molding

Item Number	A	B	C	Plus Program D	M	N	O	P
OCM	120	120	120	152	144	144	144	152
OCM135	120	120	120	152	144	144	144	152
ICM	120	120	120	152	144	144	144	152

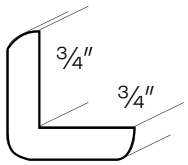

OCM

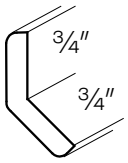

OCM135

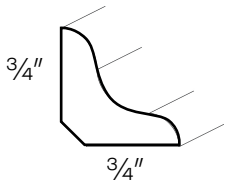

ICM

Contemporary Crown Molding

CCM	443	443	443	559	532	532	532	559

- 8 Feet long
- Outer ends are finished
- Not available in Alvic

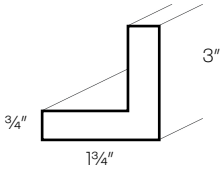

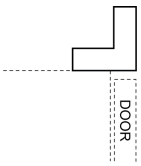

Suggested Use

Scribe / Batten Molding

SCM	98	98	98	124	118	118	118	124
BAT	98	98	98	124	118	118	118	124

- 8 Feet long

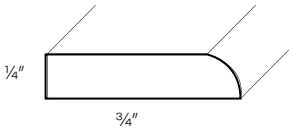

SCM

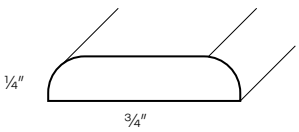

BAT

Toe Kick

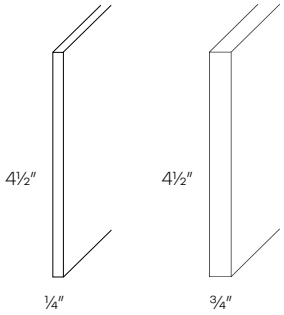

TKS TKS.75

		Plus Program						
Item Number	A	B	C	D	M	N	O	P
TKS	101	101	101	128	122	122	122	128
TKS.75*	248	248	248	313	298	298	298	313

• 8 Feet long
* Finished and edgebanded (TKS.75 only)

Toe Kick End Cap

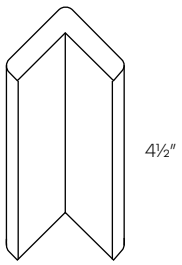

TKS-CAP	64	64	64	81	77	77	77	81

• Top and bottom sides are finished

Filler

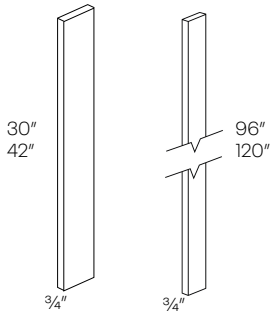

F3120	265	265	265	334	318	318	318	334
F6120	409	409	409	516	491	491	491	516
F330	58	58	58	74	70	70	70	74
F630	100	100	100	126	120	120	120	126
F342	76	76	76	96	92	92	92	96
F642	134	134	134	169	161	161	161	169
F396	179	179	179	226	215	215	215	226
F696	296	296	296	373	356	356	356	373

• Fillers finished on all 4 sides

Base Molding

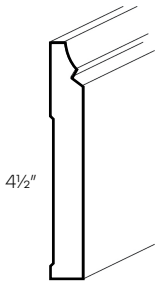

BSMS	316	316	316	399	380	380	380	399

• 8 Feet long

Column

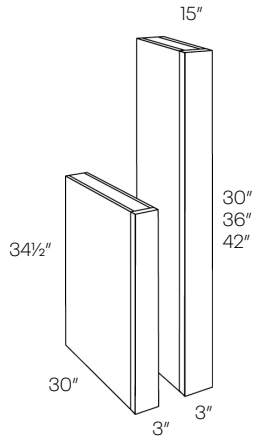

CLM-B30 (34½″H X 30″D)	503	503	503	634	604	604	604	634
CLM-30X15 (30″H X 15″D)	255	255	255	322	306	306	306	322
CLM-36X15 (36″H X 15″D)	285	285	285	360	342	342	342	360
CLM-42X15 (42″H X 15″D)	316	316	316	399	380	380	380	399

• Trimmable
• Finished 3 sides

Arched Valance

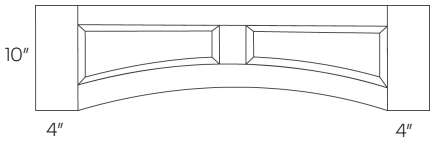

VALPR - Raised panel

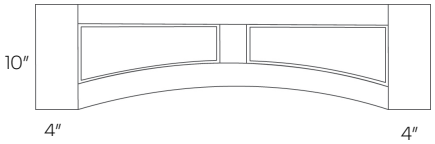

VALP - Flat panel

VALP-36	266	266	266	N/A	320	320	320	N/A
VALP-42	295	295	295	N/A	354	354	354	N/A
VALP-48	335	335	335	N/A	402	402	402	N/A
VALP-60	394	394	394	N/A	473	473	473	N/A
VALPR-36	266	266	266	N/A	320	320	320	N/A
VALPR-42	295	295	295	N/A	354	354	354	N/A
VALPR-48	335	335	335	N/A	402	402	402	N/A
VALPR-60	394	394	394	N/A	473	473	473	N/A

• 2″ Trimmable on both sides

Large Post

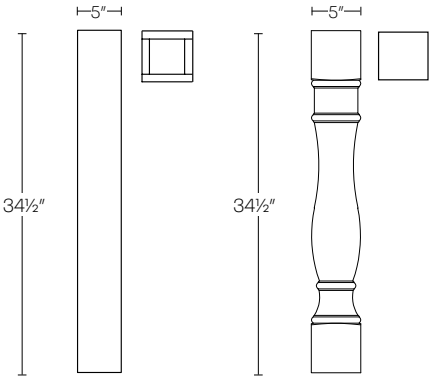

POST5-C POST5-R

• 5″ X 5″

Post

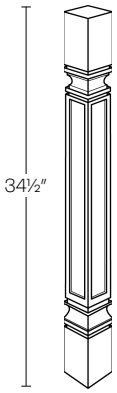

• 3″ X 3″

Corner Post

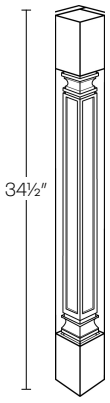

• 3″ X 3″

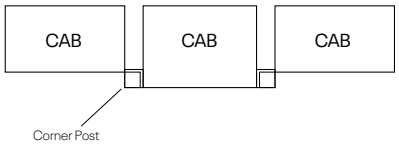

Item Number	A	B	C	Plus Program D	M	N	O	P
POST5-C	990	990	990	1248	1188	1188	1188	1248
POST5-R	1107	1107	1107	N/A	1329	1329	1329	N/A
POST-S	1230	1230	1230	1550	1476	1476	1476	1550
POST-S-CR	438	438	438	552	526	526	526	552

Spindle

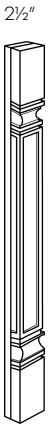

Item Number	A	B	C	Plus Program D	M	N	O	P
SPIN-S-30	229	229	229	N/A	275	275	275	N/A
SPIN-S-36	292	292	292	N/A	351	351	351	N/A
SPIN-S-42	338	338	338	N/A	406	406	406	N/A

• To be applied on top of filler (not included)

Bun Feet

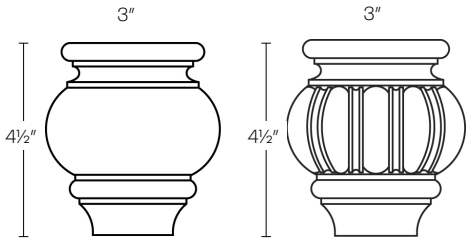

Plain Fluted

BUN-P	124	124	124	N/A	149	149	149	N/A
BUN-F	130	130	130	N/A	156	156	156	N/A

Corbel

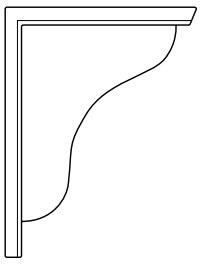

CBS6	112	112	112	142	135	135	135	142
CBS10	155	155	155	196	186	186	186	196

	W	D	H
CBS6	3″	3½″	6½″
CBS10	3″	7½″	10½″

Decorative End

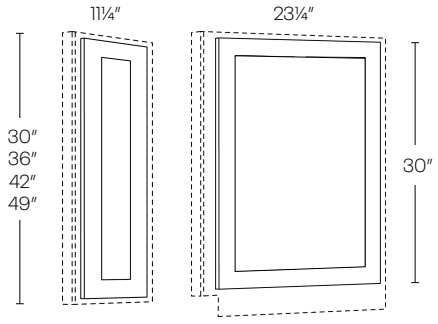

WDE12 BDE24

Item Number	A	B	C	Plus Program D	M	N	O	P
WDE1230	175	185	197	249	237	237	237	249
WDE1236	249	264	279	352	335	335	335	352
WDE1242	292	310	329	415	395	395	395	415
WDE1250	361	383	405	511	486	486	486	511
BDE24	420	446	471	595	566	566	566	662

• Use finished skin

Touch Up Kit

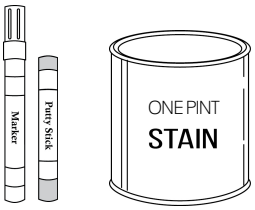

TUP TUP-PINT

TUP	112	112	112	142	135	135	135	142
TUP-PINT	132	132	132	167	159	159	159	167

• TUP-PINT is not available in the Stone finish

Reeded Door

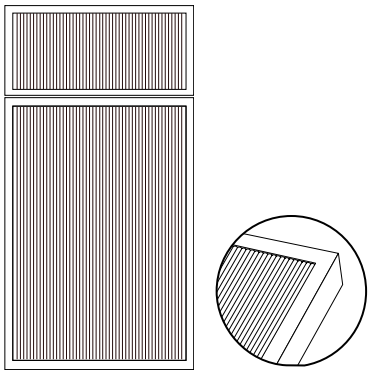

CT-CAB-DR-INS-REED	Cabinet Door Only	60%
CT-CAB-DF-INS-REED	Cabinet Drawer Front Only	15%
CT-CAB-INS-REED	Full Cabinet	60%
CT-DR-INS-REED	Custom Door	100%
CT-DF-INS-REED	Drawer Front Only	100%
CT-DR-DF-INS-REED	Door & Drawer Front Only	100%

• Only available on Newport
* Percent upcharge of cabinet price

Custom Cabinet



Item Number	Plus Program A	B	C	D	M	N	O	P
CAB-CUS-BASE	*	*	*	*	*	*	*	249
CAB-CUS-WALL	*	*	*	*	*	*	*	352
CAB-CUS-TALL	*	*	*	*	*	*	*	415

* Please call for pricing
• Customer must provide drawings & dimensions (Width x Height) for custom price quote and lead time
• Can not be combined with existing quote
• Custom Decorative Panels will have an extended lead time
• Grain is always vertical

** Cabinets are made custom, please provide accurate drawings with your order

Custom Hood

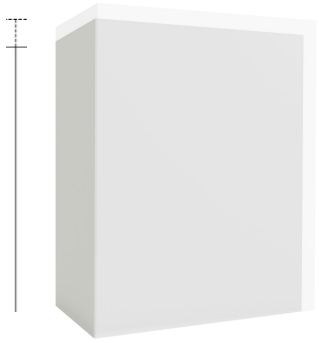

CAB-CUS-HOOD	*	*	*	*	*	*	*	249

* Please call for pricing
• Customer must provide drawings & dimensions (Width x Height) for custom price quote and lead time
• Can not be combined with existing quote
• Custom Decorative Panels will have an extended lead time
• Grain is always vertical
• Does not have metal liner

** Hoods are made custom, please provide accurate drawings with your order

Custom Door / Panel



DR-CUS (Door Profile)	35	35	35	35	35	35	35	35
PL-CUS (Panel - ¾")*	35	35	35	35	35	35	35	35

*PL-CUS does not have a profile
• Price per square foot
• Customer must provide drawings & dimensions (Width x Height) for custom price quote and lead time
• Can not be combined with existing quote
• Custom Decorative Panels will have an extended lead time
• Grain is always vertical

** Doors are made custom, please provide accurate drawings with your order

	Panel	Door
Minimum	6" x 6"	6" x 6"
Maximum	48" x 96"	48" x 96"

Modifications & Upgrades



Wall Cabinet

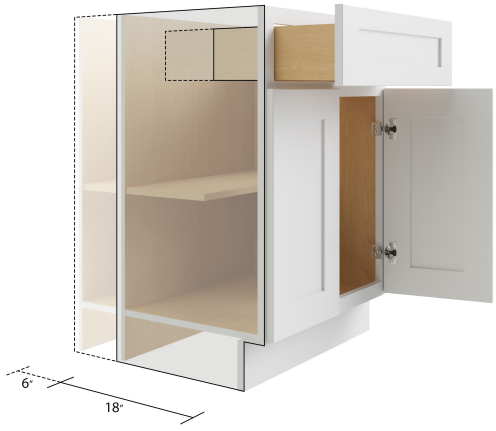

Base Cabinet

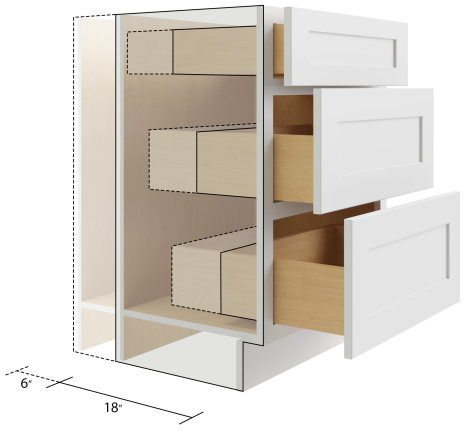

Drawer Base Cabinet

***Dovetail not in back**



Tall Cabinet

Cut Down Depth	Description	List Price
CT-CUT-DEEP-B*	Base cabinet, cut down depth	400
CT-CUT-DEEP-DB*	Drawer base cabinet, cut down depth	500
CT-CUT-DEEP-T*	Tall cabinet, cut down depth	500
CT-CUT-DEEP-W**	Wall cabinet, cut down depth	400

*Can be cut down to 9", 12", 15", 18" & 21" | **Can be cut down to 6", 9" & 11"
*All 9" Base Cabinets will have a dummy drawer front



Base Cabinet



Drawer Base Cabinet



Tall Cabinet



Wall Cabinet

* Must provide accurate drawing with your order

Chase Cuts	Description	List Price
CT-CHASE-B	Base cabinet, chase cut	700
CT-CHASE-DB	Drawer base cabinet, chase cut	900
CT-CHASE-T	Tall cabinet, chase cut	900
CT-CHASE-W	Wall cabinet, chase cut	600

•Non-stock cabinets, parts including doors and drawers, custom modifications, wood hoods and countertops (post form and self-edge) are not returnable.
•Must provide accurate drawings with your order

Door cut for glass

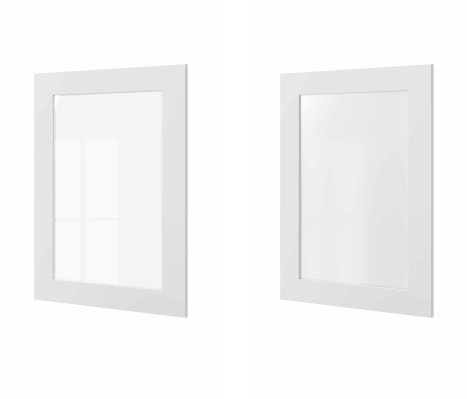

Item	Description	List Price
CT-DCG	Door cut for glass	205
CT-DCG-GLI	Door cut and insert glass	381
CT-DCG-GLI-F	Door cut and insert frosted glass	381

*Per door cost shown above

Glass Shelves



PRT-GLS-SHELF-12	(3) Glass Shelves	259
PRT-GLS-SHELF-15	(3) Glass Shelves	261
PRT-GLS-SHELF-18	(3) Glass Shelves	273
PRT-GLS-SHELF-24	(3) Glass Shelves	317
PRT-GLS-SHELF-30	(3) Glass Shelves	349
PRT-GLS-SHELF-36	(3) Glass Shelves	421

•Shelves are 3/8" thick

Extend Wall Cabinet



CT-EXD-W	Extended depth wall	806

• Can only be extended to 15", 18", 21" & 24"

Item	Description	List Price

Finished Interior



CT-FINISH-B	Finished Interior - Base Cabinet	450
CT-FINISH-W	Finished Interior - Wall Cabinet	450
CT-FINISH-T	Finished Interior - Tall Cabinet	800

• Drawers will not be finished

Concord Full Depth Shelf



CT-SHELF-FD-B9	Full Depth Shelf	18
CT-SHELF-FD-B12	Full Depth Shelf	23
CT-SHELF-FD-B15	Full Depth Shelf	28
CT-SHELF-FD-B18	Full Depth Shelf	35
CT-SHELF-FD-B21	Full Depth Shelf	38
CT-SHELF-FD-B24	Full Depth Shelf	43
CT-SHELF-FD-B27	Full Depth Shelf	50
CT-SHELF-FD-B30	Full Depth Shelf	58
CT-SHELF-FD-B33	Full Depth Shelf	68
CT-SHELF-FD-B36	Full Depth Shelf	75
CT-SHELF-FD-B39	Full Depth Shelf	85
CT-SHELF-FD-B42	Full Depth Shelf	93
CT-SHELF-FD-B48	Full Depth Shelf	100

Reduced Top Drawer



CT-TD-REDUCE	Reduce Depth of Top Drawer	120

• Can be cut down to 12", 15", 18" & 21"
• Back of drawer will not be dovetail

Toe Kick

Item	Description	List Price
CT-TK-CUT	Base cabinet, cut off toe kick	116
CT-TK-CUT-SHP	Base cabinet, cut off toe kick and ship	200
CT-TK-FLUSH	Flush Toe Kick	600
CT-TK-REDUCE	Recessed Toe Kick*	400



CT-TK-CUT-SHP



CT-TK-FLUSH



CT-TK-CUT

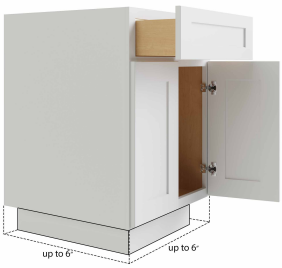

CT-TK-REDUCE

Base Cabinet to Sink Base

CHARGE-SINK BASE	Base to Sink Base	0

• Only available on B12, B15 & B18



Item	Description	List Price
CT-CUT-FLOOR	Remove bottom of cabinet	600

Remove bottom from Cabinet



Item	Description	List Price
CT-BROOM-DIVIDER	Broom Divider	800

Broom Divider

- Left or Right



Rev-a-shelf Upgrades

Maple Bottom Mount Waste Pullout



Item	Fits Cabinet	Price
35 Quart		
4WCSC-1535DM-1 (1 Can)	B15	345
4WCSC-1835DM-2 (2 Cans)	B18	364.75
50 Quart		
4WCSC-1550DM-1 (1 Can)	B15-FH	347
4WCSC-1850DM-2 (2 Cans)	B18-FH	383.50
4WCSC-2150DM-2 (2 Cans)	B21-FH	408.50

- Price includes installation in cabinet
- Soft-close
- Net Price



Girasolo Wood Shelves for Blind Base Cabinets



Item	Fits Cabinet	Price
1 Shelf		
4WLS871-12-L	BLB42/45R	332.50
4WLS871-12-R	BLB42/45L	332.50
4WLS871-15-L	BLB45/48R	339.25
4WLS871-15-R	BLB45/48L	339.25
2 Shelves		
4WLS87-12-L	BLB42/45R	586.50
4WLS87-12-R	BLB42/45L	586.50
4WLS87-15-L	BLB45/48R	601.25
4WLS87-15-R	BLB45/48L	601.25

- Price includes installation in cabinet
- Soft-close
- Net Price



Single Shelf



Two-tier

Elite Blind Corner Optimizer



Item	Fits Cabinet	Price
Wire Bottom		
5PSP-15SC-CR-6	BLB45/48	604.75
Solid Bottom		
53PSPE-15SC-GR	BLB45/48	842.75
53PSPE-15SC-MP	BLB45/48	842.75

- Price includes installation in cabinet
- Soft-close
- Net Price

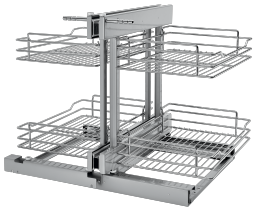

Wire Bottom

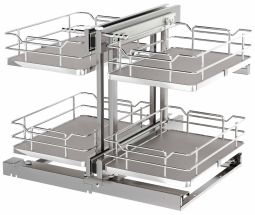

Solid Bottom (Metal)



Solid Bottom (Maple)

Heavy Duty Mixer Lift



ML-MPHDSCCR-18	B18-FH	398.50

- Price includes installation in cabinet
- Net Price



Base Cabinet Pullout w/ Utensil Bins



Item	Fits Cabinet	Price
448UT-BCSC-5C	B9-FH	308.50
448UT-BCSC-8C	B12-FH	371
448UT-BCSC-11C	B15-FH	500.75

- Price includes installation in cabinet
- BLUM, soft-close glides
- Net Price



BCSC-11C

BLUM® Soft-Close Base Cabinet Pullout



Item	Fits Cabinet	Price
448-BCSC-5C	B9-FH	272.75
448-BCSC-8C	B12-FH	300.25
448-BCSC-11C	B15-FH	410.75

- Price includes installation in cabinet
- Net Price



Base Cabinet Pullout w/ Knife Block



Item	Fits Cabinet	Price
448KB-BCSC-5C	B9-FH	443.50
448KB-BCSC-8C	B12-FH	500
448KB-BCSC-11C	B15-FH	614.75

- Price includes installation in cabinet
- BLUM, soft-close glides
- Net Price



BCSC-11C

Paper Towel Pullout



Item	Fits Cabinet	Price
448PTH-BCSC-8C	B12-FH	362.25

- Price includes installation in cabinet
- Soft-close glides
- Net Price



Base Cabinet Pullout w/ Tray Divider/Foil Wrap Holder



Item	Fits Cabinet	Price
447-BCSC-5C-L	B9-FH	308
447-BCSC-5C-R	B9-FH	308
447-BCSC-8C-L	B12-FH	342.50
447-BCSC-8C-R	B12-FH	342.50

- Price includes installation in cabinet
- Soft-close glides
- Net Price



Drawer Peg Systems



4DPS-2421	DB30	109.50
4DPS-3021	DB36	130.25

- Price includes installation in cabinet
- Installed in bottom drawer
- Net Price

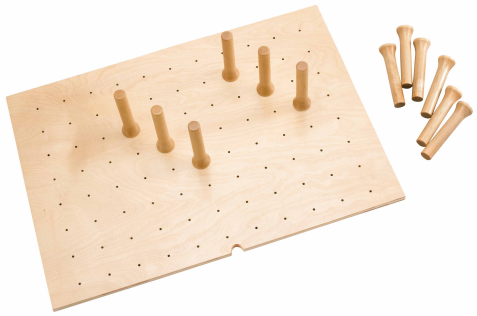

Adjustable Deep Drawer Divider System



Item	Fits Cabinet	Price
4ADI-36-1	DB30, DB33, DB36	177.25

- Price includes installation in cabinet
- Installed in bottom drawer
- Net Price





Wooden Cutlery Tray Replacement



4WTCD-15HSC-1	B15	193
4WTCD-18HSC-1	B18	219.75
4WTCD-21HSC-1	B21	226.75

- Price includes installation in cabinet
- BLUM, soft-close glides
- Net Price



4WTCD-15HSC-1

Charging Drawer Replacement



Item	Fits Cabinet	Price
4WCDB-18SC-1	B18	438.50

- Price includes installation in cabinet
- Net Price



Deep Drawer Divider



4WDIV-24-1	DB24	132
4WDIV-30-1	DB30	156.25
4WDIV-36-1	DB36	182.50

- Price includes installation in cabinet
- Net Price



4WDIV-24-1



4WDIV-30-1



4WDIV-36-1

Wood Double Knife Block Insert



Item	Fits Cabinet	Price
4DWKB-1	B24	127.25

- Price includes installation in cabinet
- Installed in top drawer
- Can be used for:
- Net Price

Base Cabinets:
B12, B15, B18, B21, B24

Drawer Base Cabinets:
DB12, DB15, DB18, DB21, DB24



Wood Spice Drawer Insert



Item	Fits Cabinet	Price
4SDI-18	B21	78.75
4SDI-24	B27	106.75
4SDI-36-1	DB36	150

- Price includes installation in cabinet
- Installed in top drawer
- Can be used for:
- Net Price

Base Cabinets:
B12, B15, B18, B21, B24

Drawer Base Cabinets:
DB12, DB15, DB18, DB21, DB24,DB30, DB33, B30-SDF



Wood Utensil Tray Insert



Item	Fits Cabinet	Price
4WUT-1	B21	68.75
4WUT-3	B27	88.75
4WUT-36-1	DB36	165.25
4WUTKB-36-1	DB36	224.50
4WUTCT-36-1	DB36	170

- Price includes installation in cabinet
- Net Price



4WUT-1
B15, B18, B21, DB15, DB18



4WUT-3
B21, B24,B27, DB21, DB24



4WUT-36-1
DB30, DB33



4WUTKB-36-1
DB30, DB33



4WUTCT-36-1
B30, BDB30, DB33

Classic

BY CNC CABINETRY

Cabinet & Door Information

White Finish Frameless Box

Frameless
1/8" Reveal

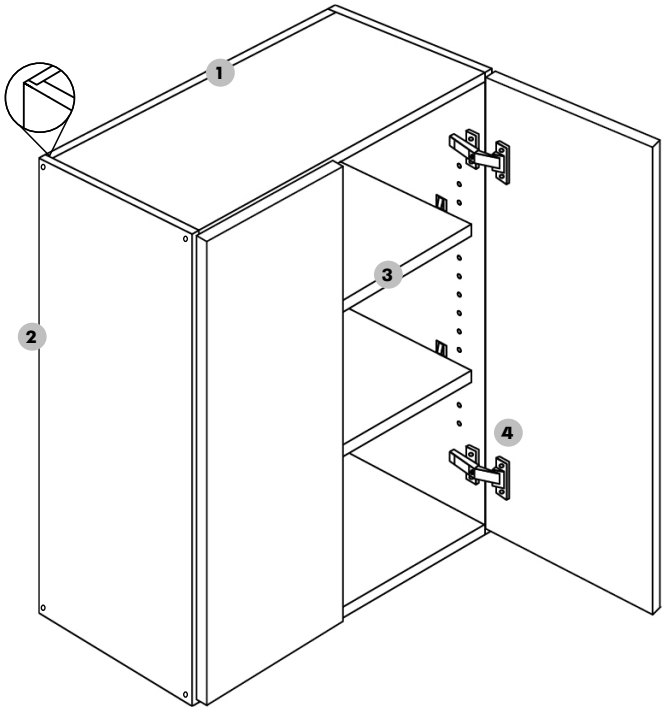

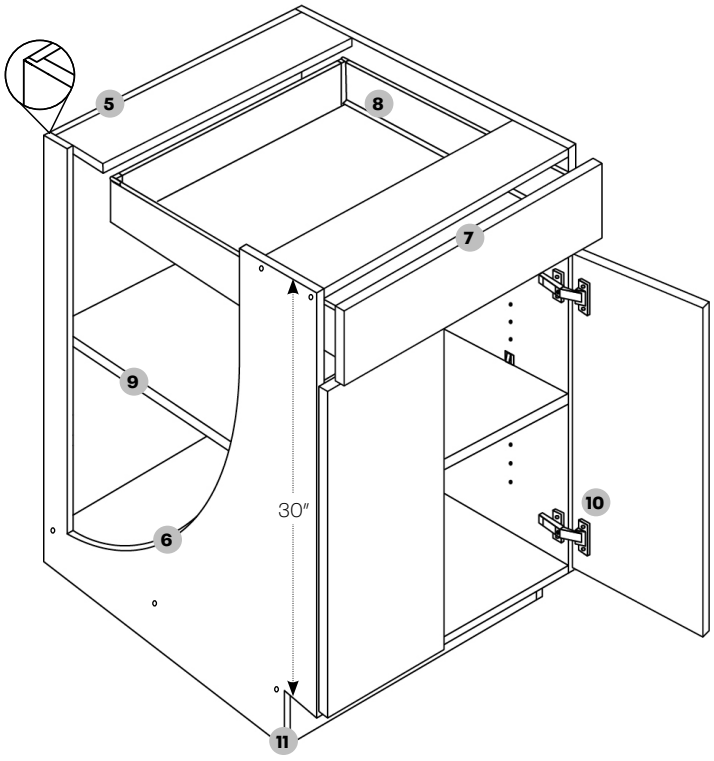

1. **Back panel** — ¾″ back panel
2. **End panel** — 3/4″ thick plywood sides, constructed with glue, screws, and wooden dowels for durability and strength.
3. **Shelves** — ¾″ thick, plywood; fully adjustable with metal clips.
4. **Hinges** — Heavy duty steel concealed 6 way adjustable clip-on hinges with soft-close mechanism
5. **Back panel** — ¾″ full back panel constructed with wood dowels, glued and screwed together.
6. **End panel** — 3/4″ thick plywood sides, constructed with glue, screws, and wooden dowels for durability and strength.
7. **Drawers** — Double white wall metal drawer with ½″ plywood bottom.
8. **Glides** — Full extension glides, with soft closing feature.
9. **Shelves** — ¾″ thick, full depth plywood; fully adjustable with metal clips.
10. **Hinges** — Heavy duty steel concealed 6 way adjustable clip-on hinges with soft-close mechanism
11. **Toe Kick** — 4½″ Toe kick with 3″ inset on all standard base and vanity cabinets. White toe kick is standard.

Cabinet boxes are white edge banded with white interior and exterior.

On diagonal corner cabinets, matching edge banding will be applied vertically.

Classic cabinets are only available assembled.

Maple Finish Frameless Box

Frameless
1/8" Reveal

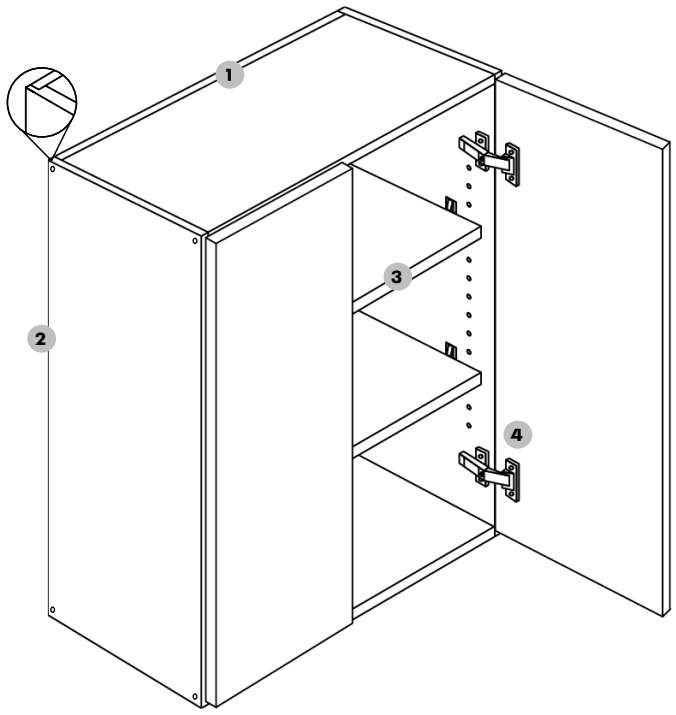

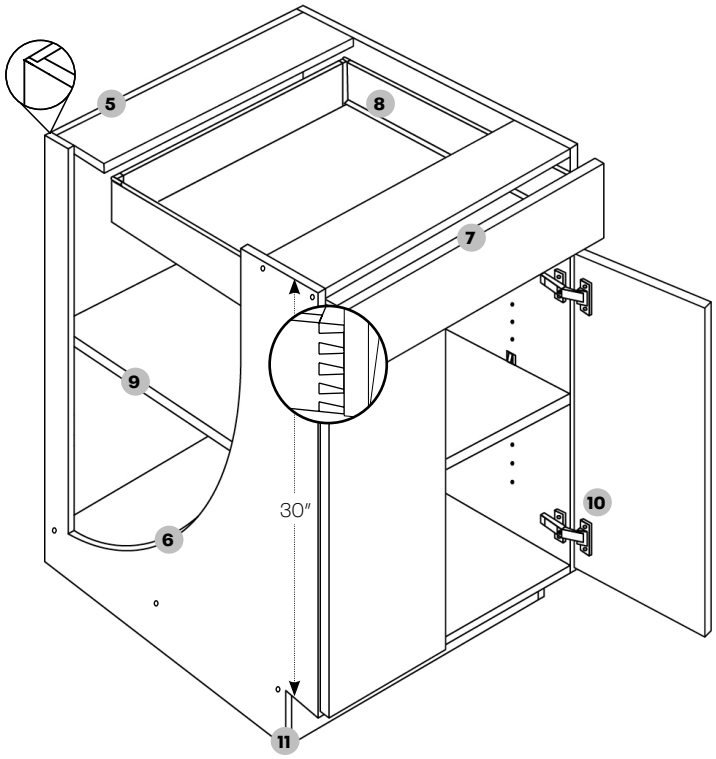

1. **Back panel** — ¾" back panel
2. **End panel** — 3/4" thick plywood sides, constructed with glue, screws, and wooden dowels for durability and strength.
3. **Shelves** — ¾" thick, plywood; fully adjustable with metal clips.
4. **Hinges** — Heavy duty steel concealed 6 way adjustable clip-on hinges with soft-close mechanism
5. **Back panel** — ¾" full back panel constructed with wood dowels, glued and screwed together.
6. **End panel** — 3/4" thick plywood sides, constructed with glue, screws, and wooden dowels for durability and strength.
7. **Drawers** — ¾" Solid wood, dovetail construction with soft-close glides.
8. **Glides** — Full extension glides, with soft closing feature.
9. **Shelves** — ¾" thick, full depth plywood; fully adjustable with metal clips.
10. **Hinges** — Heavy duty steel concealed 6 way adjustable clip-on hinges with soft-close mechanism
11. **Toe Kick** — 4½" Toe kick with 3" inset on all standard base and vanity cabinets. White toe kick is standard.

Cabinet boxes are maple edge banded with maple interior and exterior.

On diagonal corner cabinets, matching edge banding will be applied vertically.

Classic cabinets are only available assembled.

Broadway

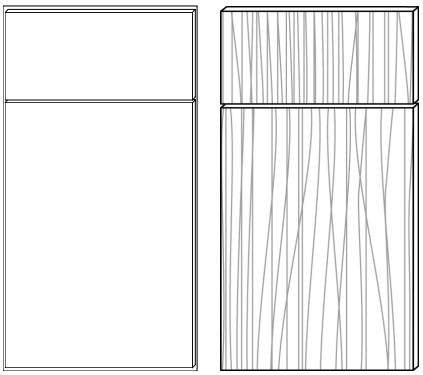

A full overlay low pressure laminate flat panel MDF door. with matching back

End Panel Options

• 3/4" applied or integrated finished sides. (customer must order)

Hardware

• 6 way, soft-close clip-on hinges and full extension glides

White Box	Maple Box	Finish	Price Code
BMW	BMM	600 - Cotton	E
BMW	BMM	601 - Silk	E
BMW	BMM	602 - Nimbus	E
BMW	BMM	603 - Cobalt	E
BMW	BMM	604 - Graphite	E
BMW	BMM	650 - Almond	E
BMW	BMM	651 - Chestnut	E
BMW	BMM	652 - Walnut	E
BMW	BMM	656 - Silver Birch	E
BMW	BMM	653 - Coastal	E
BMW	BMM	654 - Driftwood	E
BMW	BMM	655 - Beach	E

Milano

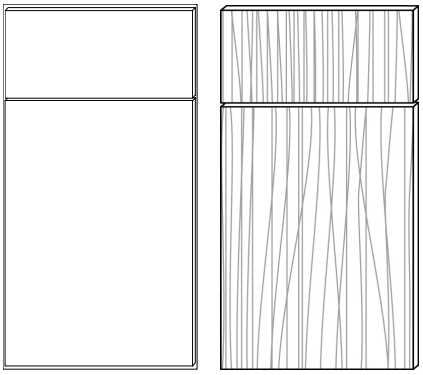

A full overlay slab door made from a MDF core, wrapped in PET with a matching edgeband and melamine back.

End Panel Options

• 3/4" applied or integrated finished sides. (customer must order)

Hardware

• BLUM 6 way, soft-close clip-on hinges and full extension glides

White Box	Maple Box	Finish	Price Code
MPW	MPM	400 - Polar White (gloss)	F
MPW	MPM	401 - Fossil Grey (gloss)	F
MPW	MPM	402 - Sand (matte)	F
MPW	MPM	403 - Seaside (matte)	F
MPW	MPM	404 - Pine (matte)	F
MPW	MPM	405 - Snow (matte)	F
MPW	MPM	406 - Sunset (matte)	F
MPW	MPM	407 - Obsidian (matte)	F
MPW	MPM	450 - Mirage (reeded)	F
MPW	MPM	451 - Dune (textured)	F
MPW	MPM	452 - Autumn (textured)	F
MPW	MPM	453 - Ash (textured)	F

Versailles

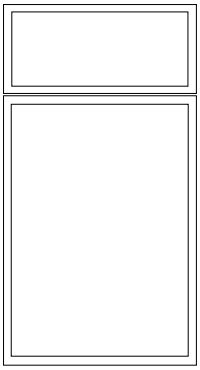

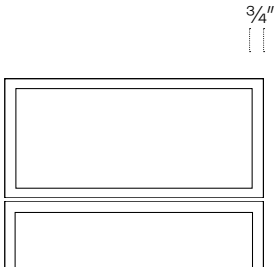

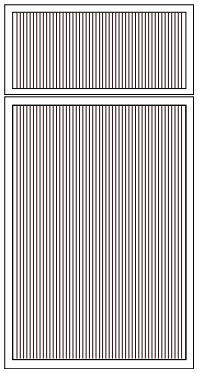

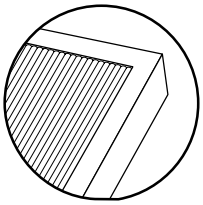

MODIFICATION
Reeded insert available as an upgrade

White Box	Maple Box	Finish	Price Code
VBW	VBM	10 - White	G

White Box	Maple Box	Finish	Price Code
Stain			
VKWP	VKMP	VBP200 - Ale	I
VKWP	VKMP	VBP201 - Bourbon	I
VKWP	VKMP	VBP202 - Wheat	I
Paint			
VBWP	VBMP	101 - Sleek White	H
VBWP	VBMP	102 - Linen	H
VBWP	VBMP	103 - Sahara	H
VBWP	VBMP	104 - Mountain Stream	H
VBWP	VBMP	105 - Adirondack Blue	H
VBWP	VBMP	106 - Sage	H
VBWP	VBMP	107 - Evergreen	H
VBWP	VBMP	108 - Rumors	H
VBWP	VBMP	109- Cracked Pepper	H
VBWP	VBMP	110 - Jet Black	H

A full overlay 5 piece solid wood, with solid MDF veneer flat center panel. The Versailles door features a 3/4″ frame.

- **3/4″ Applied finished sides (Customer must order)**
- **6 way, soft-close clip-on hinges and full extension glides**

PLUS Program Upgrades

- **BLUM 6 way, soft-close clip-on hinges and full extension glides**

Woodbourne

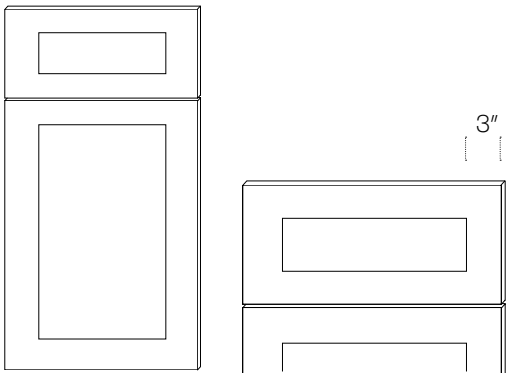

White Box	Maple Box	Finish	Price Code
WBW	WBM	10 - White	G

White Box	Maple Box	Finish	Price Code
Stain			
WKWP	WKMP	VBP200 - Ale	I
WKWP	WKMP	VBP201 - Bourbon	I
WKWP	WKMP	VBP202 - Wheat	I
Paint			
WBWP	WBMP	02 - Smoky Grey	H
WBWP	WBMP	23 - Stone	H
WBWP	WBMP	27 - Ocean	H
WBWP	WBMP	101 - Sleek White	H
WBWP	WBMP	102 - Linen	H
WBWP	WBMP	103 - Sahara	H
WBWP	WBMP	104 - Mountain Stream	H
WBWP	WBMP	105 - Adirondack Blue	H
WBWP	WBMP	106 - Sage	H
WBWP	WBMP	107 - Evergreen	H
WBWP	WBMP	108 - Rumors	H
WBWP	WBMP	109- Cracked Pepper	H
WBWP	WBMP	110 - Jet Black	H

***This product is special order only**

A full overlay 5 piece solid wood, with solid MDF veneer flat center panel.

- **3/4" Applied finished sides (Customer must order)**
- **6 way, soft-close clip-on hinges and full extension glides**

PLUS Program Upgrades

- **BLUM 6 way, soft-close clip-on hinges and full extension glides**

Highland

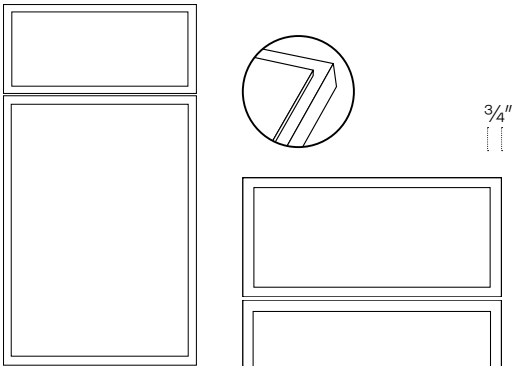

A full overlay 5 piece solid wood, with solid MDF veneer raised center panel. The Highland door features a 3/4″ frame.

- **3/4″ Applied finished sides (Customer must order)**
- **6 way, soft-close clip-on hinges and full extension glides**

PLUS Program Upgrades

- **BLUM 6 way, soft-close clip-on hinges and full extension glides**

White Box	Maple Box	Finish	Price Code
HBW	HBM	10 - White	G

White Box	Maple Box	Finish	Price Code
HBWP	HBMP	101 - Sleek White	H
HBWP	HBMP	102 - Linen	H
HBWP	HBMP	103 - Sahara	H
HBWP	HBMP	104 - Mountain Stream	H
HBWP	HBMP	105 - Adirondack Blue	H
HBWP	HBMP	106 - Sage	H
HBWP	HBMP	107 - Evergreen	H
HBWP	HBMP	108 - Rumors	H
HBWP	HBMP	109- Cracked Pepper	H
HBWP	HBMP	110 - Jet Black	H

Alvic Doors

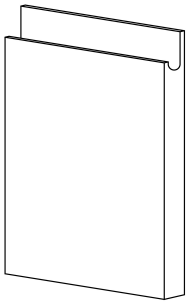

Finger-Pull

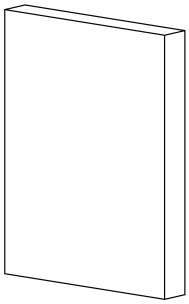

Slab

Finish	Price Code
Syncron (Textured)	J
Luxe (High Gloss) / Zenit (Matte)	K

Alvic doors come with a color matching soft postforming edge band.

Finger-Pull is 25% Up-charged

Panels cannot exceed 107″

*Alvic Doors come standard equipped with Blum hinges

- **Exposed ends need ¾″ finished panels (Not Factory Installed)**
- **Finger Pull only available on doors and drawers that are 47.5″ or less**

Specifications & Pricing

12" High Wall Cabinet

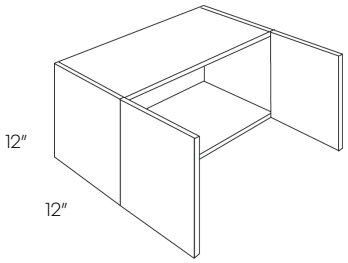

12" High, 24" Deep Wall Cabinet

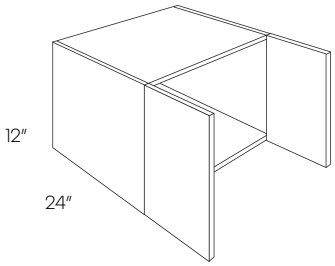

15" High Wall Cabinet

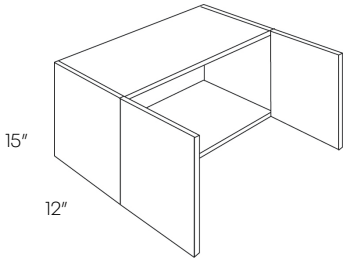

Item Number	E	F	G	Plus Program H	Plus Program I	Alvic J	Alvic K
3012	420	525	478	574	603	604	677
3312	435	544	506	608	638	626	701
3612	472	590	550	660	693	679	760
3912	510	638	632	759	797	734	822
3012X24	599	749	673	808	848	862	965
3312X24	610	763	686	824	865	877	983
3612X24	629	787	740	888	933	905	1013
3912X24	680	850	793	952	1000	978	1095
1215 (1 Door)	274	343	307	369	387	394	442
1515 (1 Door)	293	367	328	394	414	422	472
1815 (1 Door)	315	394	354	425	447	453	508
2115 (1 Door)	337	422	378	454	477	485	543
2415	414	518	481	578	607	596	667
2715	544	680	721	866	909	N/A	N/A
3015	426	533	496	596	625	613	686
3315	445	557	523	628	659	640	717
3615	472	590	603	724	760	679	760
3915	521	652	666	800	840	N/A	N/A

15" High, 24" Deep Wall Cabinet

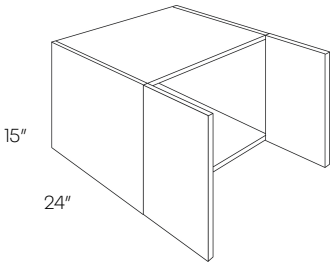

Diagonal Corner Wall Cabinet

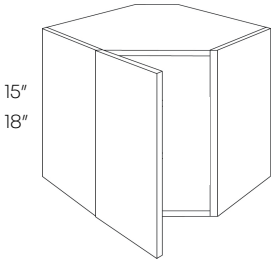

Square Corner Wall Cabinet

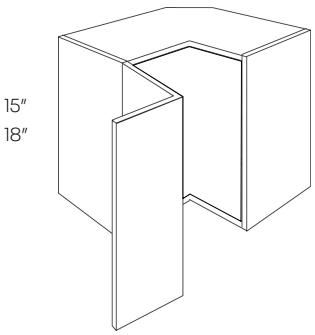

					Plus Program		Alvic	
Item Number	E	F	G	H	I	J	K
3015X24	572	715	713	856	899	823	921
3315X24	667	834	750	900	945	959	1074
3615X24	637	797	803	964	1012	916	1026
3915X24	701	877	857	1029	1080	1008	1129
CW2415	629	787	707	849	891	905	1013
CW2418	719	899	809	971	1020	1034	1158
WSQ2415	629	787	837	1005	1055	N/A	N/A
WSQ2418	719	899	955	1146	1204	N/A	N/A

18" High Wall Cabinet

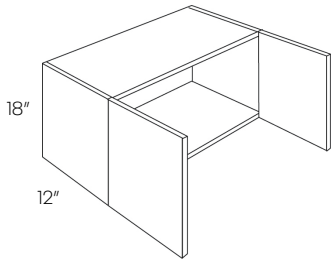

18" High, 24" Deep Wall Cabinet

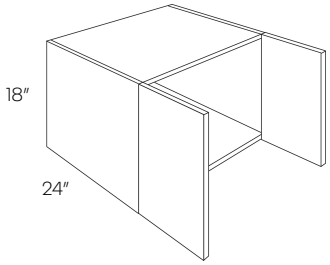

24" High Wall Cabinet

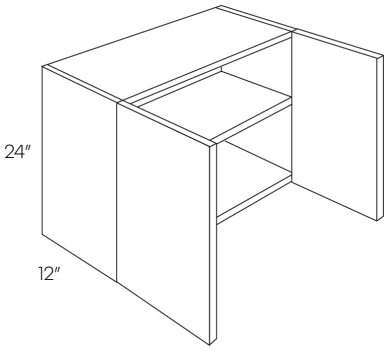

					Plus Program		Alvic	
Item Number	E	F	G	H	I	J	K
1218 (1 Door)	313	392	351	422	443	450	504
1518 (1 Door)	336	420	377	453	476	483	541
1818 (1 Door)	362	453	405	486	511	521	583
2118 (1 door)	393	492	455	546	574	565	633
2418	414	518	503	604	634	596	667
2718	423	529	562	675	709	N/A	N/A
3018	433	542	529	635	667	623	698
3318	469	587	546	656	688	675	756
3618	537	672	624	749	787	772	865
3918	601	752	698	838	880	864	968
3018X24	637	797	754	905	951	916	1026
3318X24	703	879	813	976	1025	1011	1132
3618X24	717	897	864	1037	1089	1031	1155
3918X24	733	917	914	1097	1152	1054	1181
2424	568	710	677	813	854	817	915
2724	583	729	682	819	860	839	939
3024	595	744	692	831	872	856	958
3324	634	793	734	881	925	912	1021
3624	681	852	788	946	993	979	1097
3924	744	930	819	983	1032	1070	1198
4224	809	1012	887	1065	1118	1163	1303

• No center brace

24" High, 24" Deep Wall Cabinet

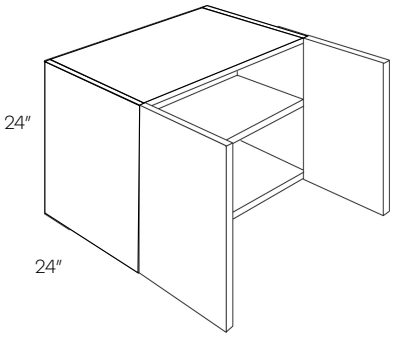

				Plus Program		Alvic	
Item Number	E	F	G	H	I	J	K
3024X24	794	993	927	1113	1169	1142	1279
3324X24	857	1072	994	1193	1253	1232	1380
3624X24	918	1148	1065	1278	1342	1320	1478
3924X24	1011	1264	1137	1365	1433	1454	1628

• No center brace

Horizontal Wall Cabinet

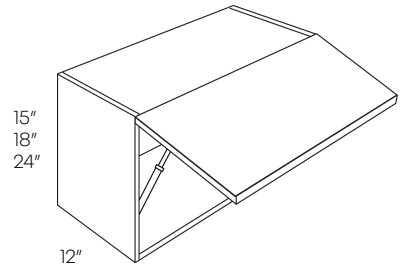

3012-HD	620	775	678	814	855	892	999
3015-HD	626	783	696	836	877	900	1008
3018-HD	633	792	729	875	919	910	1020
3024-HD*	795	994	892	1071	1124	1143	1280
3612-HD	672	840	750	900	945	966	1082
3615-HD	672	840	803	964	1012	966	1082
3618-HD	737	922	824	989	1039	1060	1187
3624-HD*	881	1102	988	1186	1245	1267	1419

* Has shelf

30" High 1 Door Wall Cabinet

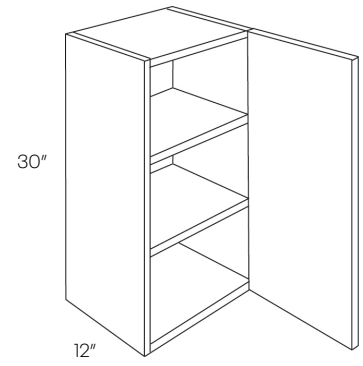

930	337	422	392	471	494	485	543
1230	376	470	438	526	552	541	606
1530	405	507	471	566	594	583	653
1830	457	572	530	636	668	657	736
2130	546	683	633	760	798	785	880

	Item Number	E	F	G	Plus Program H	Plus Program I	Alvic J	Alvic K
30" High 1 Door Open Wall Cabinet	**WOC1830**	471	589	626	752	789	N/A	N/A

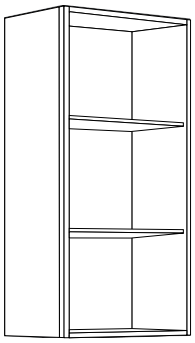

30" High 2 Door Wall Cabinet

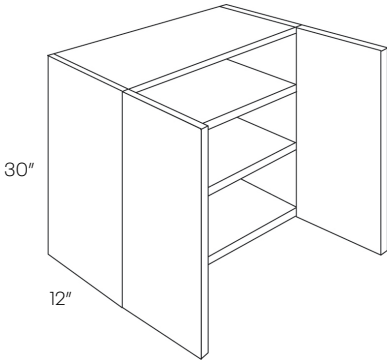

	2430	581	727	674	809	850	836	936
	2730	639	799	744	893	938	919	1029
	3030	656	820	762	915	961	943	1057
	3330	713	892	831	998	1048	1025	1148
	3630	759	949	882	1059	1112	1092	1222
	3930	818	1023	954	1145	1203	1176	1317
	4230	870	1088	1029	1235	1297	1251	1401

30" High Open Wall Cabinet	**WOC3030**	678	848	900	1080	1134	N/A	N/A

- Finished interior
-

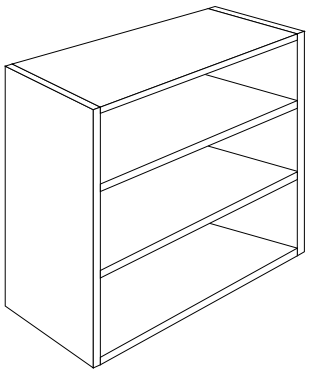

30″ High Blind Wall Cabinet

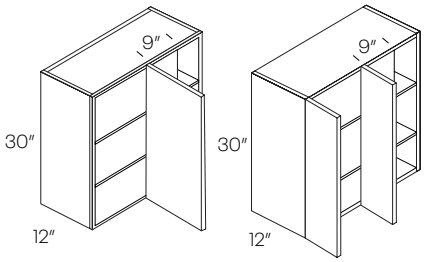

BLW27/BLW36 BLW42

Item Number	E	F	G	Plus Program H	Plus Program I	Alvic J	Alvic K
BLW27/3030 (1 door)	827	1034	961	1154	1211	1189	1332
BLW30/3330 (1 door)	907	1134	1056	1268	1331	1304	1461
BLW36/3930	987	1234	1152	1383	1452	1419	1590
BLW42/4530	1185	1482	1380	1656	1739	1704	1908

• Can be installed at actual size

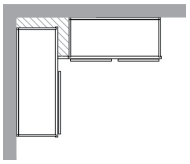

Cabinet	Min. Pull	Max. Pull	Actual Size	Door	Door Opening
BLW27/3030	27″	30″	27″	1230	11.25″ X 28.5″
BLW30/3330	30″	33″	36″	1530	14.25″ X 28.5″
BLW36/3930	36″	39″	36″	2130	20.25″ X 28.5″
BLW42/4530	42″	45″	42″	2730	26.25″ X 28.5″

30″ High Diagonal Corner Wall Cabinet

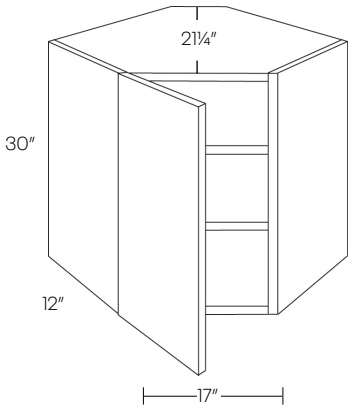

CW2430	847	1059	983	1180	1239	1218	1364

• Requires 24″ x 24″ wall space
• Matching Edgeband on vertical side

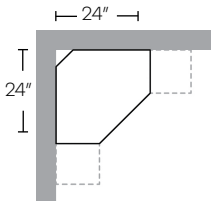

30″ High Square Corner Wall Cabinet

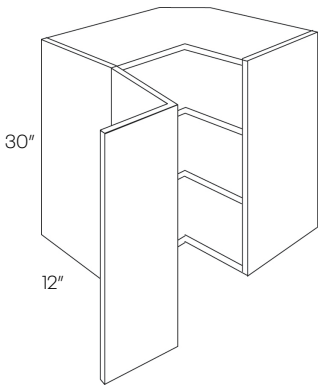

WSQ2430	974	1218	1056	1268	1331	1401	1569

• Requires 24″ x 24″ wall space
• Pie is 12″ x 12″

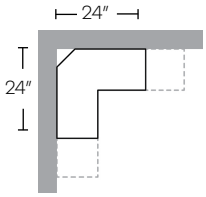

36″ High 1 Door Wall Cabinet

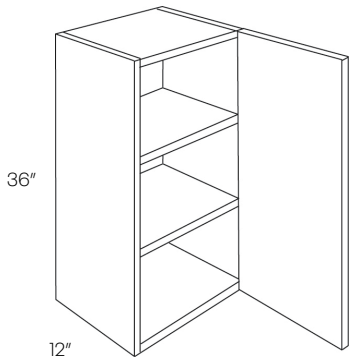

36″ High Open Wall Cabinet

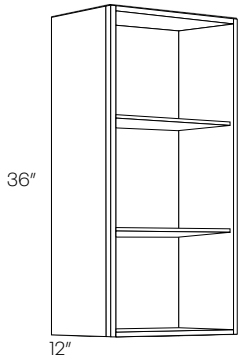

36″ High 2 Door Wall Cabinet

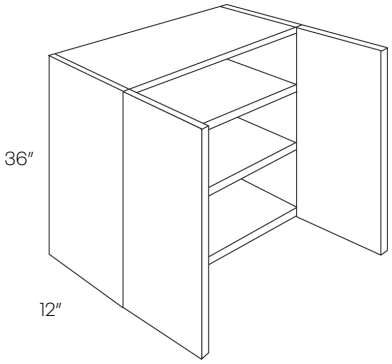

Item Number	E	F	G	Plus Program H	Plus Program I	Alvic J	Alvic K
936	385	482	471	566	594	554	620
1236	426	533	520	624	656	613	686
1536	460	575	566	680	714	662	741
1836	518	648	629	755	793	745	834
2136	618	773	756	908	953	889	995
WOC1836	560	700	744	893	938	N/A	N/A
2436	663	829	806	968	1016	954	1068
2736	726	908	890	1068	1122	1044	1169
3036	749	937	929	1115	1171	1077	1206
3336	814	1018	994	1193	1253	1171	1311
3636	865	1082	1051	1262	1325	1244	**1393**
4236	987	1234	1234	1481	1555	1419	1590

• Finished interior

Item Number	E	F	G	Plus Program H	Plus Program I	Alvic J	Alvic K
WOC3036	827	1034	1098	1318	1384	N/A	N/A

36″ High Open Wall Cabinet

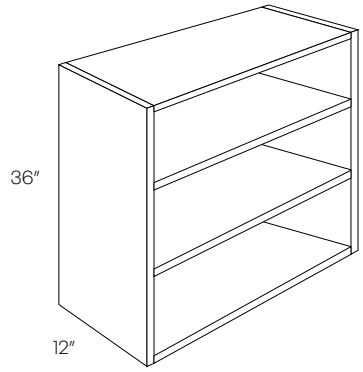

• Finished interior

36″ High Blind Wall Cabinet

BLW27/3036 (1 door)	940	1175	1118	1342	1409	1352	1514
BLW30/3336 (1 door)	1034	1293	1223	1468	1541	1487	1665
BLW36/3936	1129	1412	1327	1593	1673	1623	1818
BLW42/4536	1223	1529	1544	1853	1946	1759	1970

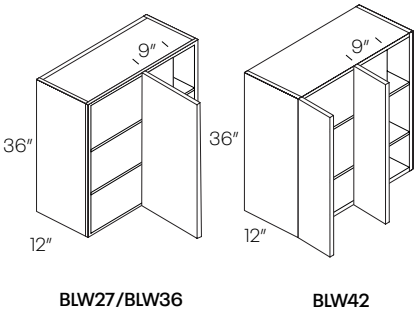

BLW27/BLW36 BLW42

• Can be installed at actual size

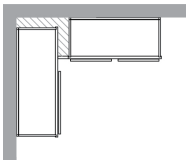

Cabinet	Min. Pull	Max. Pull	Actual Size	Door	Door Opening
BLW27/3036	27″	30″	27″	1236	11.25″ X 34.5″
BLW30/3336	30″	33″	30″	1536	14.25″ X 34.5″
BLW36/3936	36″	39″	36″	2136	20.25″ X 34.5″
BLW42/4536	42″	45″	42″	2736	26.25″ X 34.5″

36″ High Diagonal Corner Wall Cabinet

CW2436	966	1208	1035	1242	1305	1389	1556

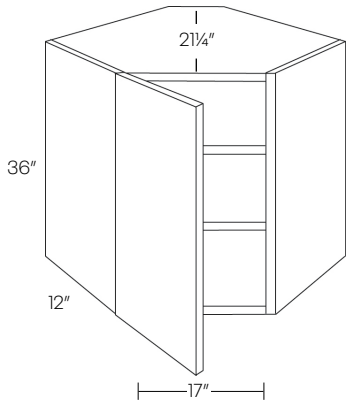

• Requires 24″ x 24″ wall space
•Matching Edgeband on vertical side

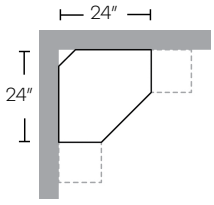

					Plus Program		Alvic	
	Item Number	E	F	G	H	I	J	K
36″ High Square Corner Wall Cabinet	**WSQ2436**	1024	1280	1111	1334	1400	1472	1649

• Requires 24″ x 24″ wall space

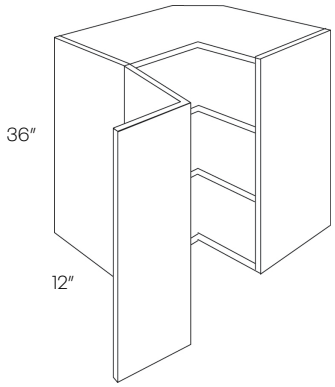

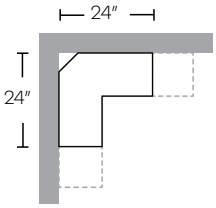

42″ High 1 Door Wall Cabinet								
	942	454	568	525	630	662	653	731
	1242	491	614	575	690	725	706	791
	1542	544	680	630	756	794	782	876
	1842	604	755	700	840	882	869	973
	2142	719	899	839	1007	1058	1034	1158

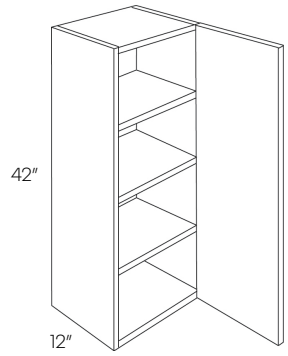

42″ High Open Wall Cabinet								
	WOC1842	623	779	827	993	1043	N/A	N/A

• Finished interior

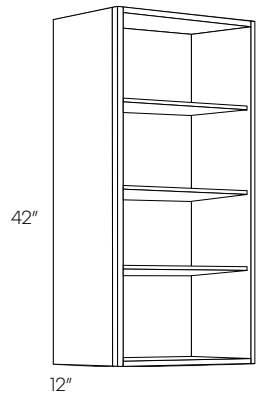

42″ High 2 Door Wall Cabinet

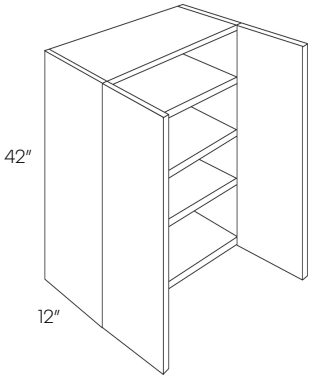

Item Number	E	F	G	Plus Program H	Plus Program I	Alvic J	Alvic K
2442	771	964	900	1080	1134	1109	**1242**
2742	849	1062	988	1186	1245	1221	1367
3042	880	1100	1023	1228	1289	1265	1417
3342	945	1182	1101	1322	1388	1359	1522
3642	1004	1255	1167	1401	1471	1444	1617
4242	1165	1457	1356	1628	1709	1675	1876

42″ High Open Wall Cabinet

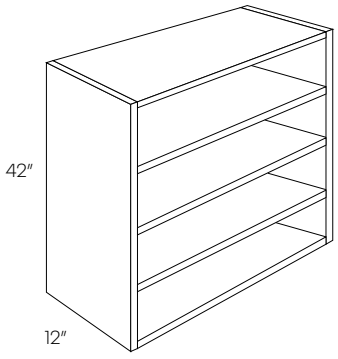

WOC3042	909	1137	1208	1450	1523	N/A	N/A

• Finished interior

42″ High Blind Wall Cabinet

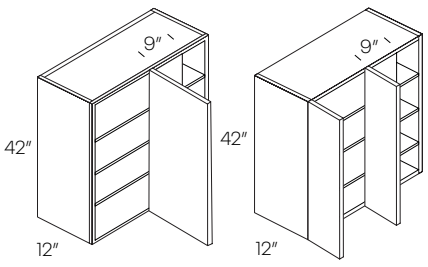

BLW27/BLW36 BLW42

BLW27/3042 (1 door)	1066	1333	1245	1494	1569	1533	1717
BLW30/3342(1 door)	1175	1469	1370	1644	1727	1690	1892
BLW36/3942 (1 door)	1282	1603	1493	1792	1882	1843	2065
BLW42/4542	1390	1738	1701	2042	2144	1999	**2238**

• Can be installed at actual size

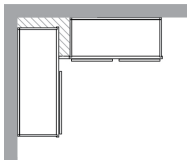

Cabinet	Min. Pull	Max. Pull	Actual Size	Door	Door Opening
BLW27/3042	27″	30″	27″	1242	11.25″ X 40.5″
BLW30/3330	30″	33″	30″	1542	14.25″ X 40.5″
BLW36/3942	36″	39″	36″	2142	20.25″ X 40.5″
BLW42/4536	42″	45″	42″	2736	26.25″ X 40.5″

Wall Countertop Cabinet

Item Number	E	F	G	Plus Program H	Plus Program I	Alvic J	Alvic K
CT1848	1041	1302	1381	1658	1741	N/A	N/A
CT1854	1156	1445	1535	1842	1935	N/A	N/A
CT1860	1264	1580	1677	2013	2114	N/A	N/A

- Finished interior
- Must sit on counter



CT1848

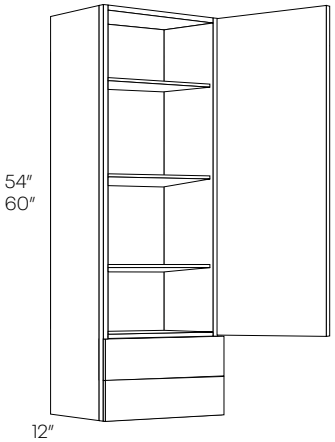

CT1854/CT1860

Bookcase Cabinet

BCC1854	963	1204	1279	1535	1612	N/A	N/A
BCC1860	1053	1317	1399	1679	1763	N/A	N/A
BCC3054	1334	1668	1771	2126	2232	N/A	N/A
BCC3060	1424	1780	1892	2271	2384	N/A	N/A

- Finished interior
- Must sit on counter

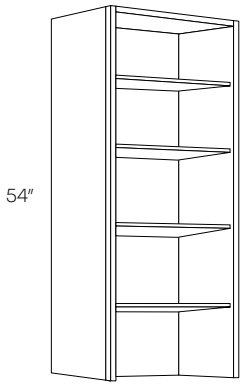

BCC1854

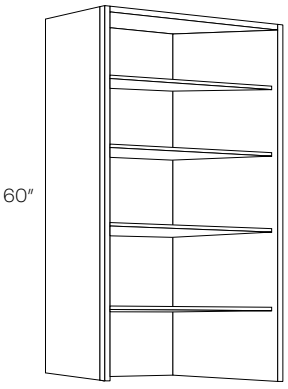

BCC1860

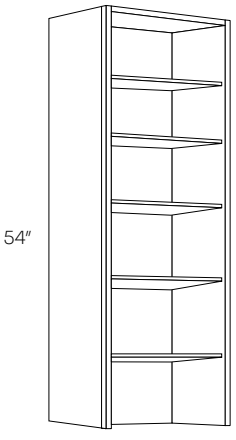

BCC3054

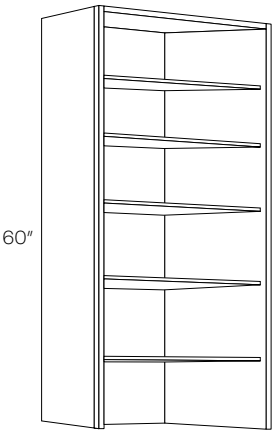

BCC3060

					Plus Program		Alvic	
	Item Number	E	F	G	H	I	J	K
42″ High Diagonal Corner Wall Cabinet	**CW2442**	1100	1375	1283	1540	1617	1582	1771

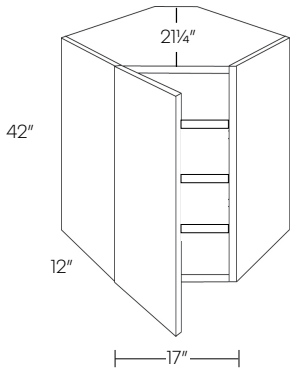

- Requires 24″ x 24″ wall space
- Matching Edgeband on vertical side

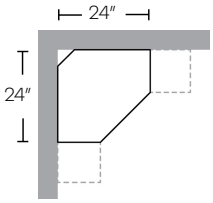

42″ High Square Corner Wall Cabinet	**WSQ2442**	1270	1588	1376	1652	1734	1826	2045

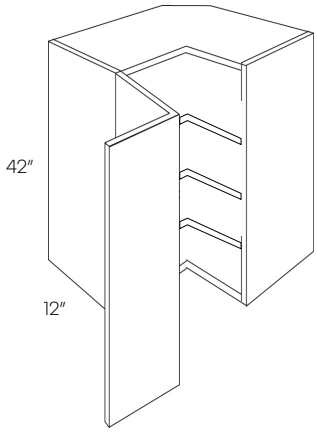

- Requires 24″ x 24″ wall space

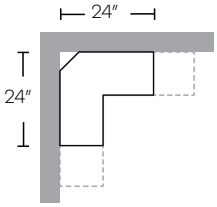

Single Door Wall End Cabinet	**WEC1230**	396	495	452	543	570	570	638
	WEC1236	450	563	506	608	638	647	725
	WEC1242	501	627	565	678	712	721	807

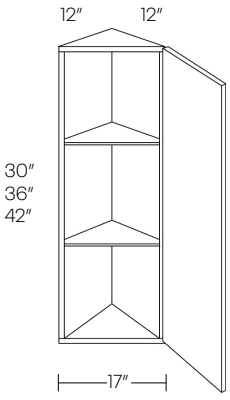

- 36″ and 42″ have 3 shelves
- Matching Edgeband

Double Door Wall End Cabinet

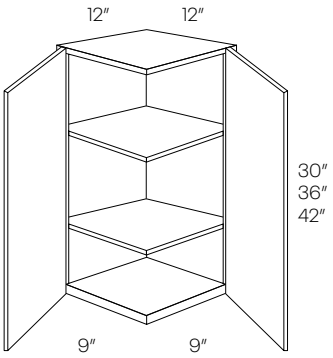

Item Number	E	F	G	Plus Program H	Plus Program I	Alvic J	Alvic K
WECD1230	502	628	565	678	712	722	809
WECD1236	562	703	633	760	798	808	905
WECD1242	628	785	706	848	890	903	1012

• 36″ and 42″ have 3 shelves

Aluminum Frame Glass Door - Vertical

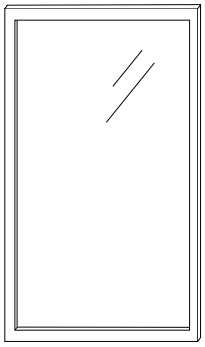

ACG-DR-1530	349	349	349	349	349	349	349
ACG-DR-1536	382	382	382	382	382	382	382
ACG-DR-1542	414	414	414	414	414	414	414
ACG-DR-1830	377	377	377	377	377	377	377
ACG-DR-1836	411	411	411	411	411	411	411
ACG-DR-1842	442	442	442	442	442	442	442

• Aluminum doors shipped loose
• Aluminum door frame is black
• BLUM not available

Aluminum Frame Glass Door - Horizontal

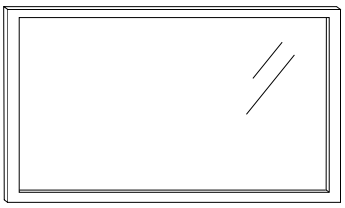

ACG-DR-3015-HD	349	349	349	349	349	349	349
ACG-DR-3018-HD	377	377	377	377	377	377	377
ACG-DR-3615-HD	382	382	382	382	382	382	382
ACG-DR-3618-HD	411	411	411	411	411	411	411

• Aluminum doors shipped loose
• Aluminum door frame is black
• BLUM not available

Aluminum Frame Glass Door - Vertical

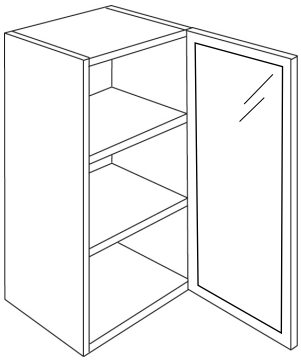

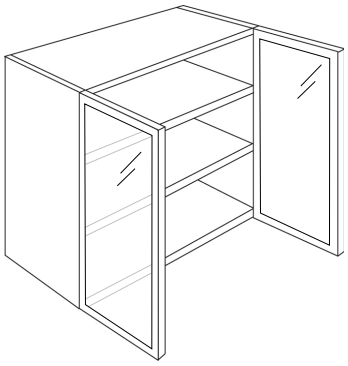

Item Number	E	F	G	Plus Program H	Plus Program I	Alvic J	Alvic K
ACG-1530	843	945	817	912	940	1021	1091
ACG-1830	941	1056	904	1010	1042	1141	1220
ACG-3030	1532	1696	**1454**	1607	1653	1819	1933
ACG-3630	1727	1917	1630	1807	1860	2060	2190
ACG-1536	960	1075	944	1058	1092	1162	1241
ACG-1836	1072	1202	906	1032	1070	1299	1388
ACG-3036	1749	1937	1685	1871	1927	2077	2206
ACG-3636	1973	2190	1605	1816	1879	2352	2501
ACG-1542	1106	1242	911	1037	1075	1344	1438
ACG-1842	1229	1380	1139	1279	1321	1494	1598
ACG-3042	2004	2224	1585	1790	1851	2389	2541
ACG-3642	2254	2505	2045	2279	2349	2694	2867

- Aluminum door frame is black
- BLUM not available
- Finished interior available as an upcharge

Aluminum Frame Glass Door - Horizontal

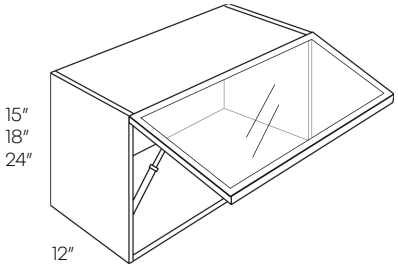

ACG-3015-HD	972	1129	915	1055	1096	1246	1354
ACG-3018-HD	1007	1166	1103	1249	1293	1284	1394
ACG-3615-HD	1050	1218	1181	1342	1390	1344	1460
ACG-3618-HD	1144	1329	1101	1266	1316	1467	1594

- Aluminum door frame is black
- BLUM not available
- Finished interior available as an upcharge

Custom Glass Doors

Custom Glass and Frame Options

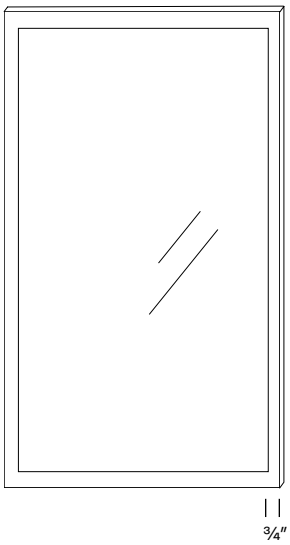

- Custom Doors are priced per square foot
- Aluminum doors shipped loose
- BLUM not available
- Customer must provide drawings & dimensions (Width x Height) for custom price quote and lead time

Exampke SKU: GAC1-DR-1230-SPECIFY FRAME/GLASS

Glass Options

Glass Type	Price Code
Low Iron Clear Glass	GAC1
Satin Glass	GAC1
Bronze Clear Glass	GAC1
Bronze Satin Glass	GAC2
Narrow Reeded Glass	GAC2
Standard Reeded Glass	GAC2

Frame Options

Frame Color	Finish
Gold	Metallic
Modern Brass	Metallic
Artic Silver	Metallic
Onyx	Matte

Low Iron Clear Glass

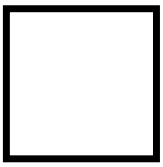

Satin Glass



Bronze Clear Glass



Bronze Satin Glass

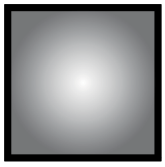

Narrow Reeded Glass

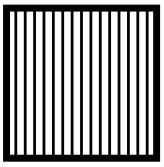

Standard Reeded Glass

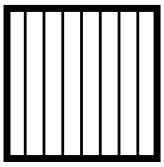

Custom Glass Door

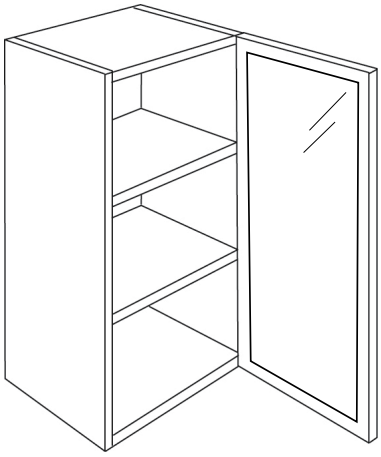

Item Number	GAC1	GAC2
DR-CUS*	117.25	137.50

* Custom Doors are priced per square foot
• Prices are for door(s) only. Cabinet box must be purchased separately.
• Net price

Custom Glass Horizontal Wall Cabinet

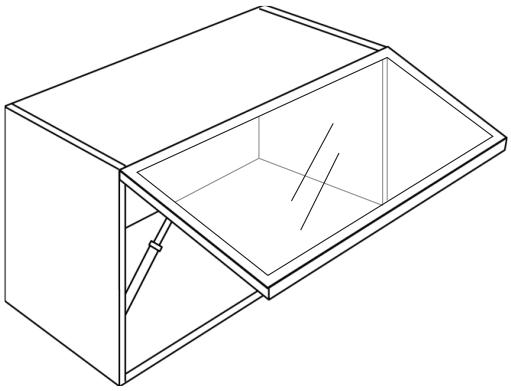

DR-3024-HD	455.00	555.50
DR-3624-HD	552.00	672.50

* Custom Doors are priced per square foot
• Prices are for door(s) only. Cabinet box must be purchased separately.
• Net price

12" High Custom Glass Door Wall Cabinet

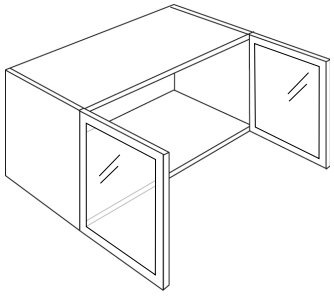

Item Number	GAC1	GAC2
DR-3012	257.75	308.00
DR-3312	279.50	334.75
DR-3612	301.25	361.50
DR-3912	323.00	388.25

• Item includes 2 doors
• Prices are for door(s) only. Cabinet box must be purchased separately.
• Net price

15" High Custom Glass Door Wall Cabinet

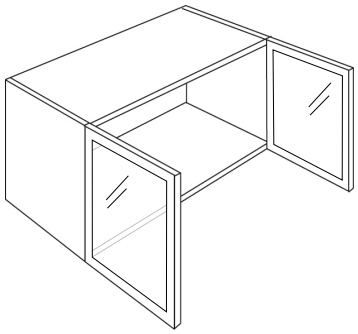

DR-1515*	156.25	187.50
DR-1815*	183.25	221.00
DR-2115*	210.50	254.50
DR-2415	257.75	308.00
DR-3015	312.25	375.00
DR-3315	339.25	408.25
DR-3615	366.50	441.75
DR-3915	393.75	475.25

* Single door cabinet
• Item includes 2 doors
• Prices are for door(s) only. Cabinet box must be purchased separately.
• Net price

18" High Custom Glass Door Wall Cabinet

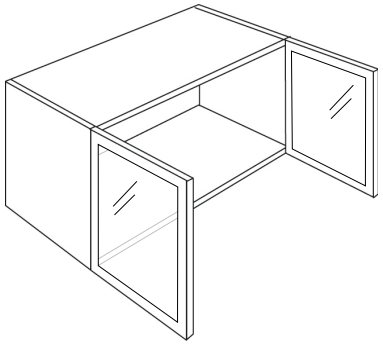

DR-1218*	150.75	180.75
DR-1518*	183.25	221.00
DR-1818*	216.00	261.00
DR-2118*	248.50	301.25
DR-2418	301.25	361.50
DR-3018	366.50	441.75
DR-3318	399.00	482.00
DR-3618	431.75	522.00
DR-3918	464.25	562.25

* Single door cabinet
• Item includes 2 doors
• Prices are for door(s) only. Cabinet box must be purchased separately.
• Net price

24" High Custom Glass Door Wall Cabinet

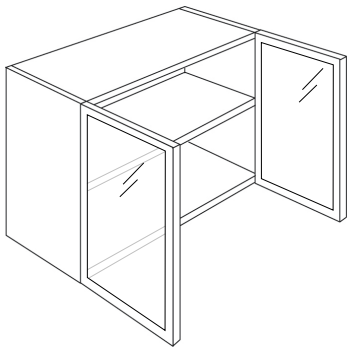

DR-2424	388.25	468.50
DR-2724	431.75	522.00
DR-3024	475.25	575.50
DR-3324	518.50	629.00
DR-3624	562.00	682.50
DR-3924	605.50	736.00
DR-4224	649.00	789.50

• Item includes 2 doors
• Prices are for door(s) only. Cabinet box must be purchased separately.
• Net price

30" High Custom Glass Door Single Door Wall Cabinet

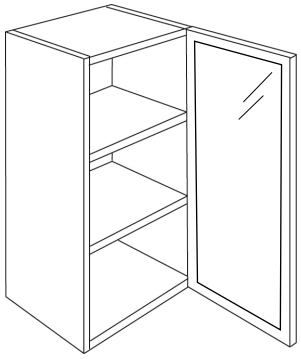

DR-930	183.25	221.00
DR-1230	237.75	287.75
DR-1530	292.00	354.75
DR-1830	346.25	421.75
DR-2130	400.75	488.50

• Prices are for door(s) only. Cabinet box must be purchased separately.
• Net price

30" High Custom Glass Door Double Door Wall Cabinet

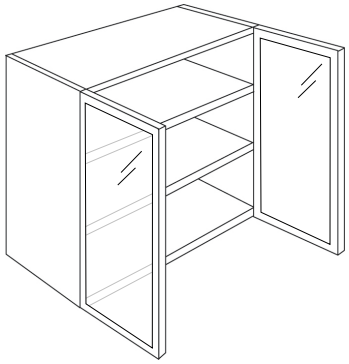

DR-2430	475.25	575.50
DR-2730	529.50	642.50
DR-3030	583.75	709.25
DR-3330	638.25	776.25
DR-3630	692.50	843.25
DR-3930	746.75	910.00
DR-4230	801.25	977.00

• Item includes 2 doors
• Prices are for door(s) only. Cabinet box must be purchased separately.
• Net price

36″ High Custom Glass Door Single Door Wall Cabinet

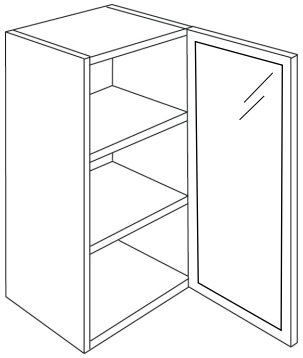

Item Number	GAC1	GAC2
DR-936	226.00	271.25
DR-1236	291.25	351.50
DR-1536	356.50	431.75
DR-1836	421.50	512.00
DR-2136	476.75	582.25

• Prices are for door(s) only. Cabinet box must be purchased separately.
• Net price

36″ High Custom Glass Door Double Door Wall Cabinet

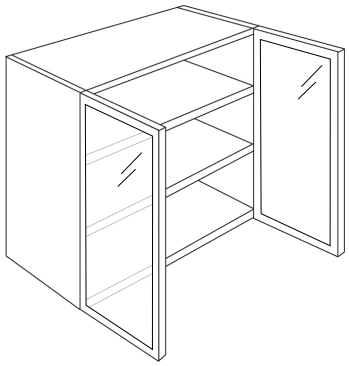

DR-2436	562	682.50
DR-2736	647.50	783.00
DR-3036	692.50	843.25
DR-3336	777.75	943.50
DR-3636	823.00	1003.75
DR-3936	888.00	1003.75
DR-4236	953.25	1164.25

• Item includes 2 doors
• Prices are for door(s) only. Cabinet box must be purchased separately.
• Net price

42″ High Custom Glass Door Single Door Wall Cabinet

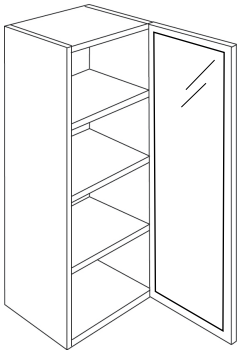

DR-942	258.50	311.25
DR-1242	334.75	405.00
DR-1542	410.75	498.50
DR-1842	486.75	592.25
DR-2142	552.75	675.75

• Prices are for door(s) only. Cabinet box must be purchased separately.
• Net price

42" High Custom Glass Door Double Door Wall Cabinet

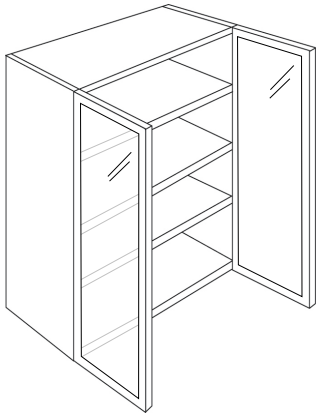

Item Number	GAC1	GAC2
DR-2442	888.00	789.50
DR-2742	745.25	903.50
DR-3042	801.25	977.00
DR-3342	897.50	1090.75
DR-3642	953.25	1164.25
DR-3942	1029.50	1257.75
DR-4242	1105.50	1351.50

• Item includes 2 doors
• Prices are for door(s) only. Cabinet box must be purchased separately.
• Net price

Custom Glass Door Countertop Wall Cabinet

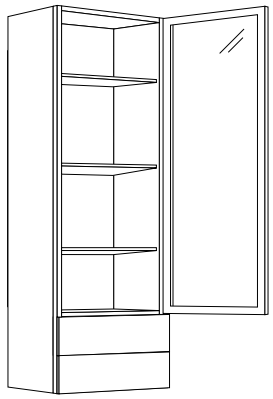

DR-CT1848	421.50	512.00
DR-CT1854	486.75	592.25
DR-CT1860	552.00	672.50

• Prices are for door(s) only. Cabinet box must be purchased separately.
• Net price

Custom Glass Door Corner Wall Cabinet

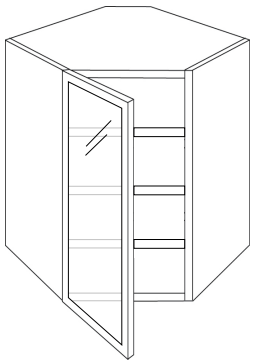

DR-CW2415	237.75	287.75
DR-CW2418	281.00	341.25
DR-CW2430	455.00	555.50
DR-CW2436	552.00	672.50
DR-CW2442	639.00	779.50

• Prices are for door(s) only. Cabinet box must be purchased separately.
• Net price

Custom Glass Door Tall Cabinet

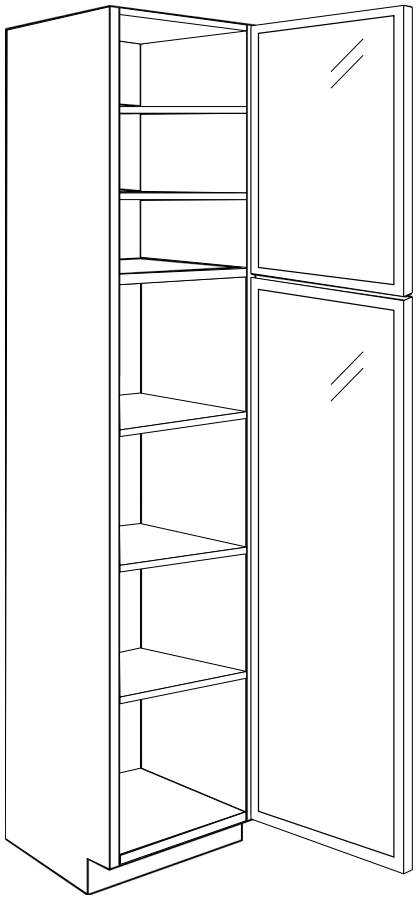

Item Number	GAC1	GAC2
DR-UC1524B	474.00	576.75
DR-UC1824B	562.75	686.00
DR-UC1524X84T	292.00	354.75
DR-UC1824X84T	346.25	421.75
DR-UC1524X90T	410.75	498.50
DR-UC1824X90T	346.25	421.75
DR-UC1524X96T	411.50	502.00
DR-UC1824X96T	486.75	592.25

• Prices are for door(s) only. Cabinet box must be purchased separately
• Must buy top and bottom doors
• Net price

Custom Glass Door Tall Cabinet



Item Number	GAC1	GAC2
DR-UC2424B	770.50	934.75
DR-UC3024B	948.00	1153.25
DR-UC2424X84T	475.25	575.50
DR-UC3024X84T	562.00	682.50
DR-UC2424X90T	669.25	809.75
DR-UC3024X90T	583.75	709.25
DR-UC2424X96T	692.50	843.25
DR-UC3024X96T	821.25	997.00

• Prices are for door(s) only. Cabinet box must be purchased separately
• Must buy top and bottom doors
• Net price

Pocket Door Cabinet W/ BLUM

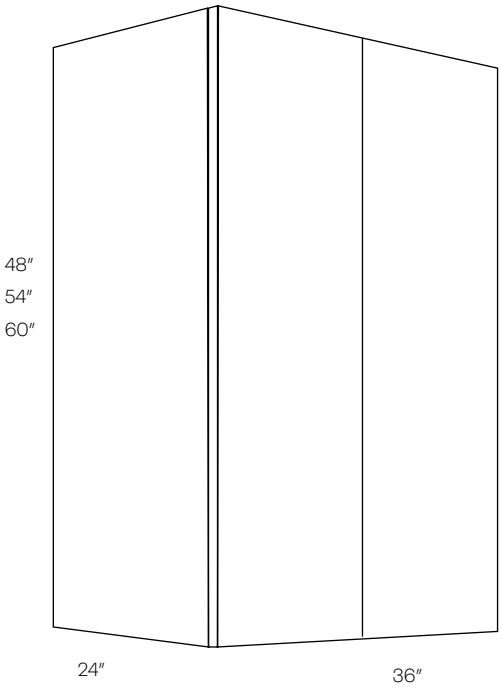

Item Number	E	F	G	Plus Program H	Plus Program I	Alvic J	Alvic K
PDB3648L	15878	19848	N/A	N/A	N/A	N/A	N/A
PDB3648R	15878	19848	N/A	N/A	N/A	N/A	N/A
PDB3654L	16554	20693	N/A	N/A	N/A	N/A	N/A
PDB3654R	16554	20693	N/A	N/A	N/A	N/A	N/A
PDB3660L	17229	21537	N/A	N/A	N/A	N/A	N/A
PDB3660R	17229	21537	N/A	N/A	N/A	N/A	N/A

- Bi-fold door
- BLUM hardware
- Available Left or Right
- Must sit on counter
- 4 Shelves included

Pocket Door Cabinet

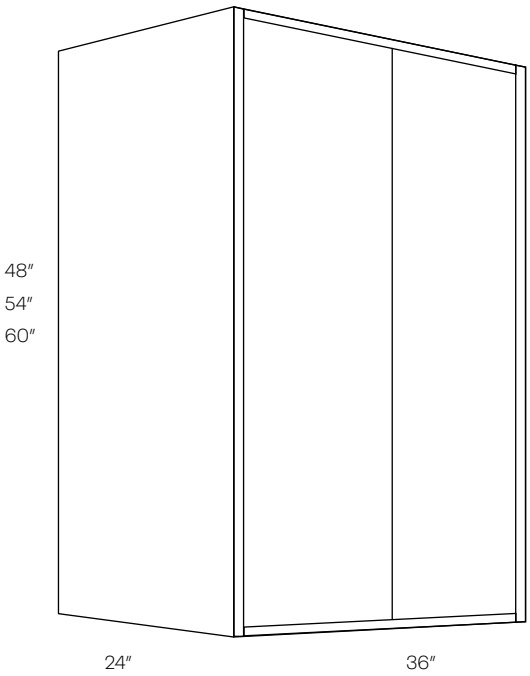

Item Number	E	F	G	Plus Program H	Plus Program I	Alvic J	Alvic K
PD3648	5066	6333	N/A	N/A	N/A	N/A	N/A
PD3654	5742	7178	N/A	N/A	N/A	N/A	N/A
PD3660	6417	8022	N/A	N/A	N/A	N/A	N/A

- Pivot and Slide doors
- Must sit on counter
- Doors are inset into 3/4″ panels
- 4 Shelves included

Single Door Base Cabinet

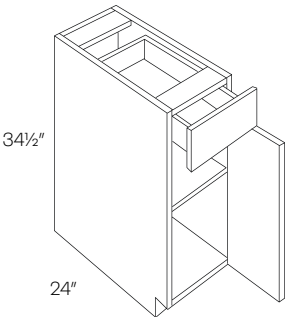

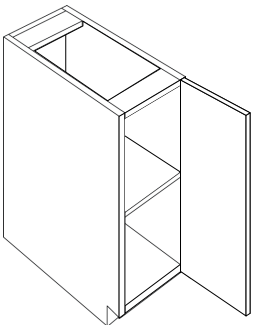

Full Height

				Plus Program		Alvic	
Item Number	E	F	G	H	I	J	K
B9	491	614	628	754	792	706	791
B12	566	708	709	851	894	814	912
B15	591	739	739	887	932	850	952
B18	622	778	779	935	982	895	1002
B21	707	884	874	1049	1102	1017	1139
B9-FH	496	625	585	702	773	719	805
B12-FH	566	708	709	851	894	814	912
B15-FH	591	739	739	887	932	850	952
B18-FH	622	778	779	935	982	895	1002
B21-FH	707	884	874	1049	1102	1017	1139

- White Box has metal drawer
- Maple has a solid wood dovetail box, with ball bearing soft close glides (not BLUM)

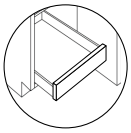

Slab drawer on
White Cabinet box POS

Single Door & Drawer Base Cabinet W/ POD/POS

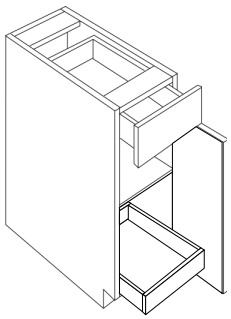

1 POS

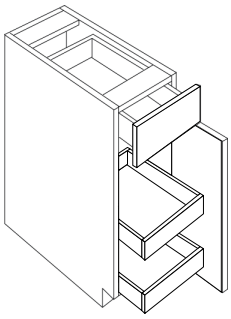

2 POS

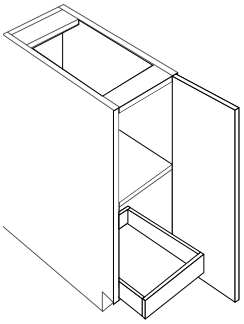

Full Height 1 POS

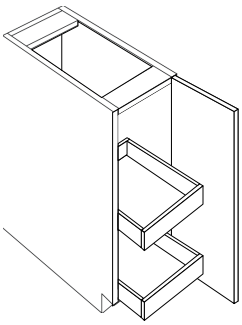

Full Height 2 POS

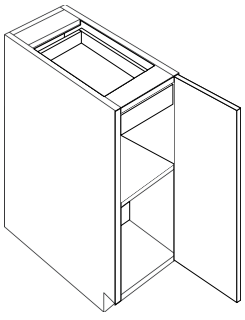

Full Height POD

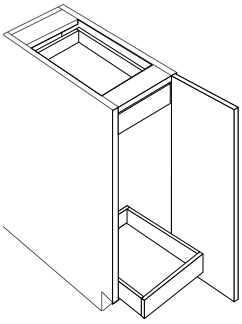

Full Height POD, 1 POS

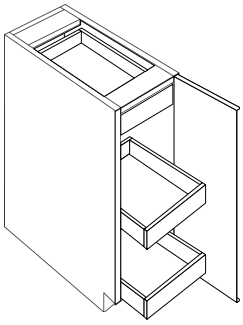

Full Height POD, 2 POS

Item Number	E	F	G	Plus Program H	Plus Program I	Alvic J	Alvic K
B12-POS1	912	1054	1030	1172	1215	1160	1258
B15-POS1	848	1096	1070	1218	1263	1207	1309
B18-POS1	1006	1162	1134	1290	1337	1279	1386
B21-POS1	1105	1282	1242	1417	1470	1415	1537
B12-POS1-FH	912	1054	1030	1172	1215	1160	1258
B15-POS1-FH	848	1096	1070	1218	1263	1207	1309
B18-POS1-FH	1006	1162	1134	1290	1337	1279	1386
B21-POS1-FH	1105	1282	1242	1417	1470	1415	1537
B12-POS2	1258	1400	1351	1493	1536	1506	1604
B15-POS2	1305	1453	1401	1549	1594	1564	1666
B18-POS2	1390	1546	1489	1645	1692	1663	1770
B21-POS2	1503	1680	1610	1785	1838	1813	1935
B12-POS2-FH	1258	1400	1351	1493	1536	1506	1604
B15-POS2-FH	1305	1453	1401	1549	1594	1564	1666
B18-POS2-FH	1305	1546	1489	1645	1692	1663	1770
B21-POS2-FH	1503	1680	1610	1785	1838	1813	1935
B12-FH-POD	912	1054	1030	1172	1215	N/A	N/A
B12-FH-POS1-POD	1258	1400	1351	1493	1536	N/A	N/A
B12-FH-POS2-POD	1604	1746	1672	1814	1857	N/A	N/A
B15-FH-POD	948	1096	1070	1218	1263	N/A	N/A
B15-FH-POS1-POD	1305	1453	1401	1549	1594	N/A	N/A
B15-FH-POS2-POD	1662	1810	1732	1880	1925	N/A	N/A
B18-FH-POD	1006	1162	1134	1290	1337	N/A	N/A
B18-FH-POS1-POD	1390	1546	1489	1645	1692	N/A	N/A
B18-FH-POS2-POD	1774	1930	1844	2000	2047	N/A	N/A
B21-FH-POD	1105	1282	1242	1417	1470	N/A	N/A
B21-FH-POS1-POD	1503	1680	1610	1785	1838	N/A	N/A
B21-FH-POS2-POD	1901	2078	1978	2153	2206	N/A	N/A

- White Box has metal drawer
- Maple has a solid wood dovetail box, with ball bearing soft close glides (not BLUM)

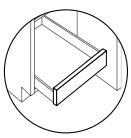

Slab drawer on
White Cabinet box POS

1 Drawer 2 Door Base Cabinet

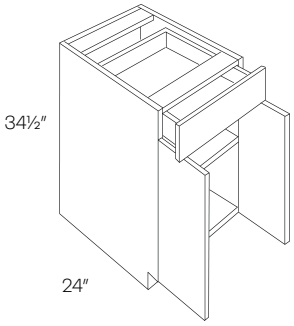

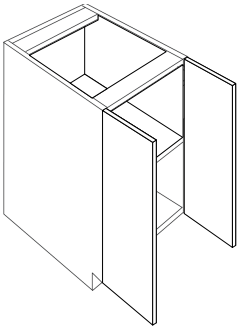

Full Height

Item Number	E	F	G	Plus Program H	Plus Program I	Alvic J	Alvic K
B24	792	990	940	1128	1185	1139	1276
B27	875	1094	1029	1235	1297	1258	1409
B24-FH	792	990	940	1128	1185	1139	1276
B27-FH	875	1094	1029	1235	1297	1258	1409

- White Box has metal drawer
- Maple has a solid wood dovetail box, with ball bearing soft close glides (not BLUM)

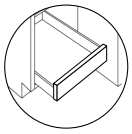

Slab drawer on
White Cabinet box POS

1 Drawer 2 Door Base Cabinet W/ POD/POS

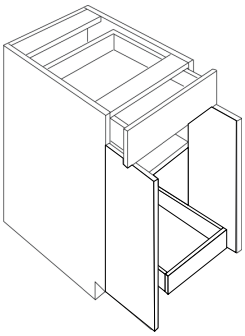

1 POS

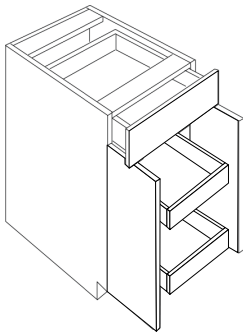

2 POS

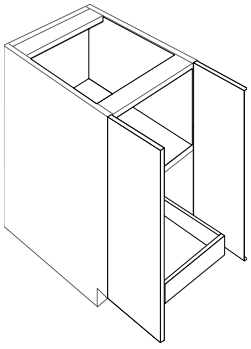

Full Height 1 POS

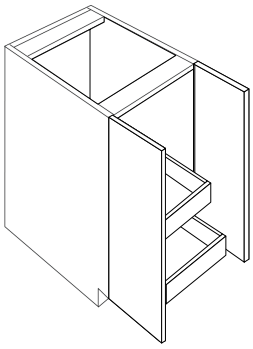

Full Height 2 POS

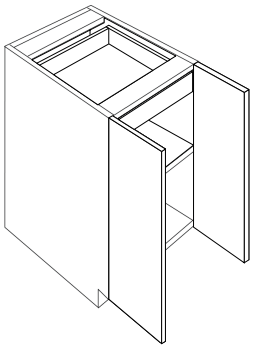

Full Height POD

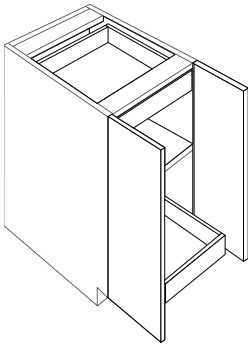

Full Height POD, 1 POS

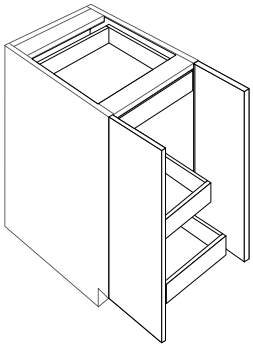

Full Height POD, 2 POS

				Plus Program		Alvic	
Item Number	E	F	G	H	I	J	K
B24-POS1	1228	1426	1343	1531	1588	1575	**1712**
B27-POS1	1326	1545	1444	1650	1712	1709	1860
B24-POS1-FH	1228	1426	1343	1531	1588	1575	1712
B27-POS1-FH	1326	1545	1444	1650	1712	1709	1860
B24-POS2	1664	1862	1746	1934	1991	2011	2148
B27-POS2	1777	1996	1859	2065	2127	2160	2311
B24-POS2-FH	1664	1862	1746	1934	1991	2011	2148
B27-POS2-FH	1777	1996	1859	2065	2127	2160	2311
B24-FH-POD	1228	1426	1343	1531	1588	N/A	N/A
B24-FH-POS1-POD	1664	1862	1746	1934	1991	N/A	N/A
B24-FH-POS2-POD	2100	2298	2149	2337	2394	N/A	N/A
B27-FH-POD	1326	1545	1444	1650	1712	N/A	N/A
B27-FH-POS1-POD	1777	1996	1859	2065	2127	N/A	N/A
B27-FH-POS2-POD	2228	2447	2274	2480	2542	N/A	N/A

- White Box has metal drawer
- Maple has a solid wood dovetail box, with ball bearing soft close glides (not BLUM)

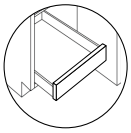

Slab drawer on
White Cabinet box POS

2 Drawer & Door Base Cabinet

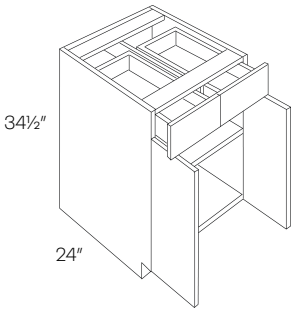

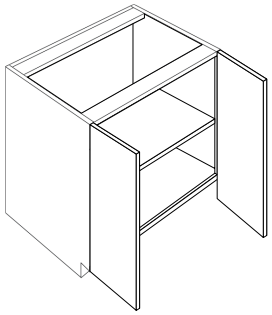

Full Height

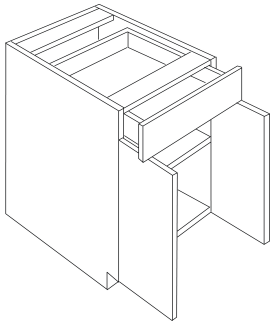

Single Drawer Front

				Plus Program		Alvic	
Item Number	E	F	G	H	I	J	K
B30	953	1192	1167	1401	1471	1370	1535
B33	1017	1272	1238	1486	1560	1462	1638
B36	1066	1333	1294	1553	1631	1533	1717
B39	1145	1444	1351	1621	1787	1660	1860
B42	1206	1521	1423	1708	1883	1749	1959
B30-FH	953	1192	1167	1401	1471	1370	1535
B33-FH	**1017**	1272	1238	1486	1560	1462	1638
B36-FH	1066	1333	1294	1553	1631	1533	**1717**
B39-FH	1134	1418	1366	1640	1722	1631	1826
B42-FH	1196	1495	1443	1732	1819	1720	**1926**
B30-SDF	953	1192	1167	1401	1471	N/A	N/A
B33-SDF	1017	1272	1238	1486	1560	N/A	N/A
B36-SDF	1066	1333	1294	1553	1631	N/A	N/A

- White Box has metal drawer
- Maple has a solid wood dovetail box, with ball bearing soft close glides (not BLUM)

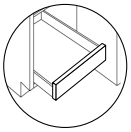

Slab drawer on
White Cabinet box POS

2 Drawer 2 Door Base Cabinet W/ POS and/or POD

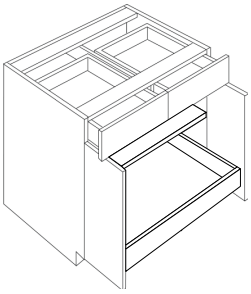

1 POS

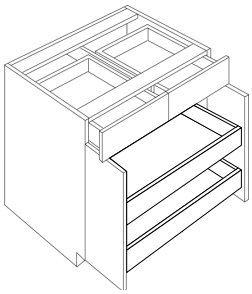

2 POS

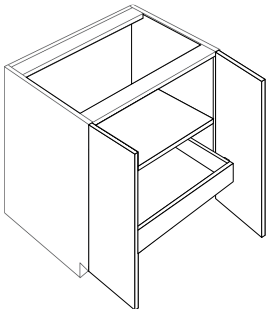

Full Height 1 POS

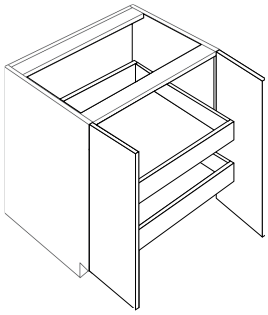

Full Height 2 POS

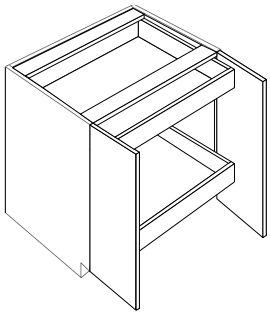

Full Height 1 POS

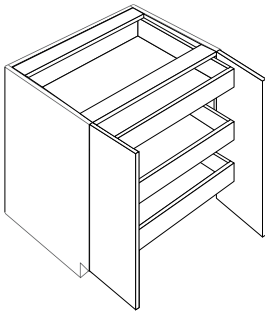

Full Height 2 POS

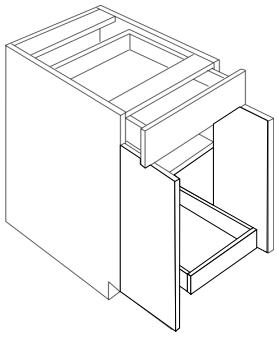

Single Drawer Front 1 POS

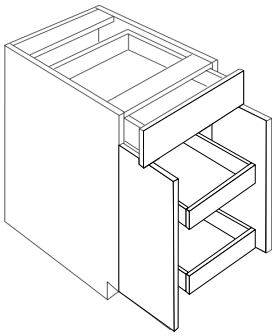

Single Drawer Front 2 POS

Item Number	E	F	G	Plus Program H	Plus Program I	Alvic J	Alvic K
B30-POS1	1418	1657	1595	1829	1899	1835	2000
B33-POS1	1498	1753	1681	1929	2003	1943	2119
B36-POS1	1575	1842	1761	2020	2098	2042	2226
B42-POS1	1724	2023	1928	2217	2304	2248	2454
B30-POS1-FH	1418	1657	1595	1829	1899	1835	2000
B33-POS1-FH	1498	1753	1681	1929	2003	1943	2119
B36-POS1-FH	1575	1842	1761	2020	2098	2042	2226
B42-POS1-FH	1724	2023	1928	2217	2304	2248	2454
B30-POS2	1883	2122	2023	2257	2327	2300	2465
B33-POS2	1979	2234	2124	2372	2446	2424	2600
B36-POS2	2084	2351	2228	2487	2565	2551	2735
B42-POS2	2252	2551	2413	2702	2789	2776	2982
B30-POS2-FH	1883	2122	2023	2257	2327	2300	2465
B33-POS2-FH	1979	2234	2124	2372	2446	2424	2600
B36-POS2-FH	2084	2351	2228	2487	2565	2551	2735
B42-POS2-FH	2252	2551	2413	2702	2789	2776	2982
B30-FH-POD	1418	1657	1595	1829	1899	N/A	N/A
B30-FH-POS1-POD	1883	2122	2023	2257	2327	N/A	N/A
B30-FH-POS2-POD	2348	2587	2451	2685	2755	N/A	N/A
B33-FH-POD	1498	1753	1681	1929	2003	N/A	N/A
B33-FH-POS1-POD	1979	2234	2124	2372	2446	N/A	N/A
B33-FH-POS2-POD	2460	2715	2567	2815	2889	N/A	N/A
B36-FH-POD	1575	1842	1761	2020	2098	N/A	N/A
B36-FH-POS1-POD	2084	2351	2228	2487	2565	N/A	N/A
B36-FH-POS2-POD	2593	2860	2695	2954	3032	N/A	N/A
B42-FH-POD	1724	2023	1928	2217	2304	N/A	N/A
B42-FH-POS1-POD	2252	2551	2413	2702	2789	N/A	N/A
B42-FH-POS2-POD	2780	3079	2898	3187	3274	N/A	N/A
B30-SDF-POS1	1418	1657	1595	1829	1899	N/A	N/A
B30-SDF-POS2	1883	2122	2023	2257	2327	N/A	N/A
B33-SDF-POS1	1498	1753	1681	1929	2003	N/A	N/A
B33-SDF-POS2	1979	2234	2124	2372	2446	N/A	N/A
B36-SDF-POS1	1575	1842	1761	2020	2098	N/A	N/A
B36-SDF-POS2	2084	2351	2228	2487	2565	N/A	N/A

Blind Base Cabinet

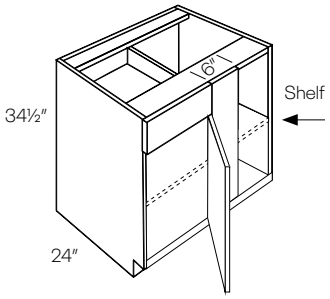

Item Number	E	F	G	Plus Program H	Plus Program I	Alvic J	Alvic K
BLB36/39	1008	1260	1227	1473	1547	1449	1623
BLB39/42	1041	1302	1260	1512	1588	1497	1677
BLB42/45	1112	1390	1349	1619	1700	1599	1791
BLB45/48	1190	1488	1467	1761	1849	1711	1916

- Reversible Left or Right
- Must be pulled to the minimum position

Cabinet	Min. Pull	Max. Pull	Actual Size	Door	Door Opening
BLB36/39	36″	39″	27″	B9	8.25″
BLB39/42	39″	42″	33″	B12	11.25″
BLB42/45	42″	45″	36″	B15	14.25″
BLB45/48	45′	48″	42′	B18	17.25″

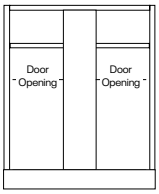

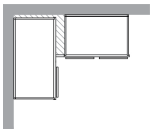

Full Height Blind Base Cabinet

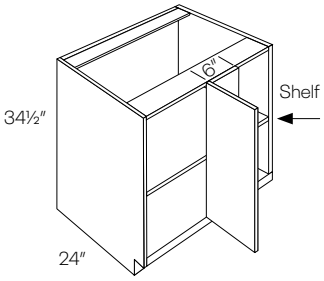

Full Height Door

BLB36/39-FH	1008	1260	1227	1473	1547	1449	1623
BLB39/42-FH	1041	1302	1260	1512	1588	1497	1677
BLB42/45-FH	1112	1390	1349	1619	1700	1599	1791
BLB45/48-FH	1190	1488	1467	1761	1849	1711	1916

- Reversible Left or Right
- Must be pulled to the minimum position

Cabinet	Min. Pull	Max. Pull	Actual Size	Door	Door Opening
BLB36/39	36″	39″	27″	B9	8.25″
BLB39/42	39″	42″	33″	B12	11.25″
BLB42/45	42″	45″	36″	B15	14.25″
BLB45/48	45′	48″	42′	B18	17.25″

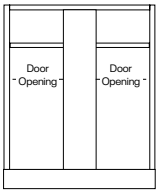

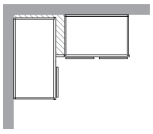

2 Drawer Base Cabinet

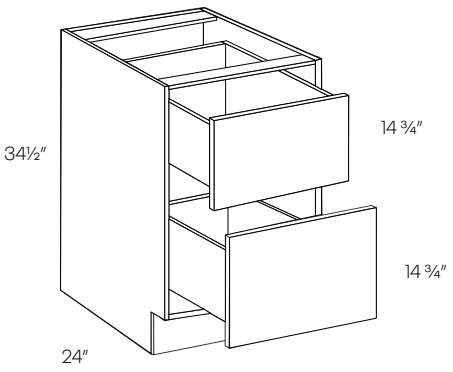

Item Number	E	F	G	Plus Program H	Plus Program I	Alvic J	Alvic K
DB24-2	1136	1420	1278	1534	1611	1633	1829
DB30-2	1225	1532	1379	1655	1738	1761	1973
DB33-2	1286	1608	1447	1737	1824	1849	2071
DB36-2	1337	1672	1505	1806	1897	1922	2153

- Metal drawer walls are 8″ high
- Maple drawer walls are 11″ high

2 Drawer Base Cabinet W/ POD

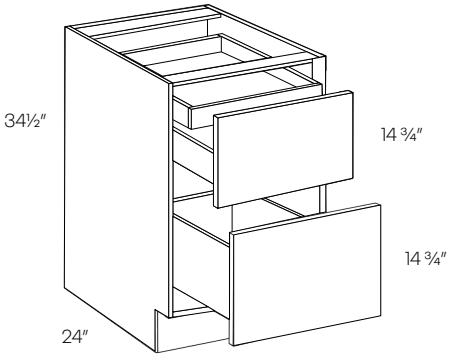

DB24-2-POD	2320	2573	2487	2743	2820	N/A	N/A
DB30-2-POD	2502	2779	2663	2939	3022	N/A	N/A
DB33-2-POD	2729	3051	2776	2743	3153	N/A	N/A
DB36-2-POD	2723	3022	2906	3066	3298	N/A	N/A

3 -Drawer Base Cabinet

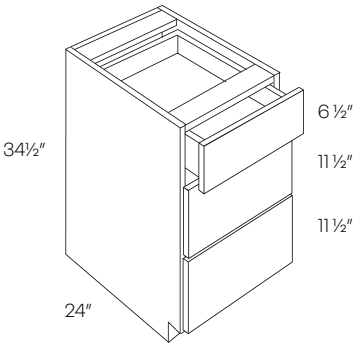

DB12	874	1093	1122	1347	1414	1257	1408
DB15	915	1144	1168	1402	1472	1316	1474
DB18	943	1179	1199	1439	1511	1356	1519
DB21	978	1223	1237	1485	1559	1406	1575
DB24	1012	1265	1278	1534	1611	1455	1630
DB27	1040	1300	1342	1611	1691	1495	1675
DB30	1107	1384	1379	1655	1738	1592	1783
DB33	1151	1439	1447	1737	1824	1655	1654
DB36	1196	1495	1505	1806	1897	1720	1926

- Maple drawer walls are 8″ high

4 -Drawer Base Cabinet

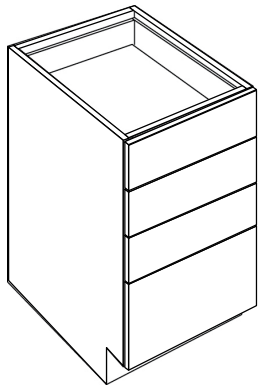

Item Number	E	F	G	Plus Program H	Plus Program I	Alvic J	Alvic K
DB12-4	997	1247	1324	1589	1669	N/A	N/A
DB15-4	1039	1299	1379	1655	1738	N/A	N/A
DB18-4	1066	1333	1417	1701	1786	N/A	N/A
DB21-4	1102	1378	1464	1757	1845	N/A	N/A
DB24-4	1136	1420	1508	1810	1901	N/A	N/A

Diagonal Corner Sink Base Cabinet

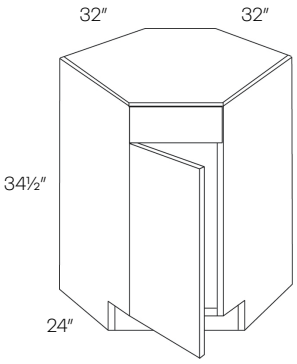

CSB36L	1528	1910	1731	2078	2182	2197	2461
CSB36R	1528	1910	1731	2078	2182	2197	2461

- Full height available for same price
- Requires 36″x36″ wall space
- Matching edgebanding will be applied on vertical edge frame

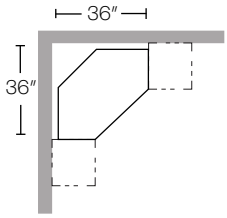

Diagonal Corner Sink Front

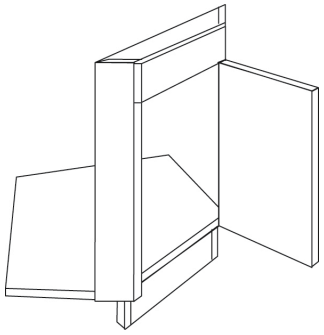

CSF36*	405	507	496	596	625	583	653
CSFFL36 (Floor)	190	238	173	208	218	274	306

*Requires 36″x36″ wall space
*Requires a floor (sold separately)
- CSF36 ships together with CSFFL36
- For CSF36, matching edgeband will be applied on vertical edge frame

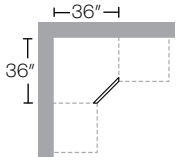

				Plus Program		Alvic	
Item Number	E	F	G	H	I	J	K

Easy Reach Corner Base Cabinet

ER36R	1528	1910	1968	2362	2480	2197	2461
ER36L	1528	1910	1968	2362	2480	2197	2461

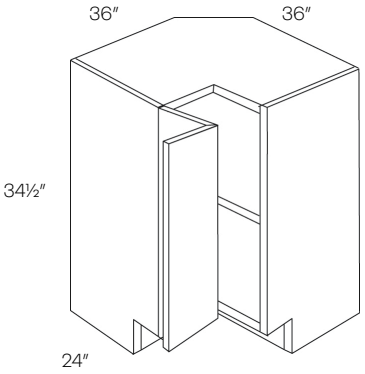

- Available in left or right hinge
- Left hand shown

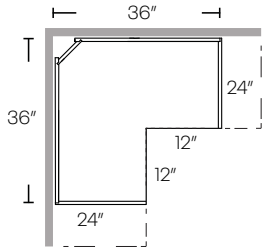

Base Square Corner Cabinet

BSQC33R	1580	1975	1779	2135	2242	2272	2544
BSQC33L	1580	1975	1779	2135	2242	2272	2544
BSQC36R	1580	1975	1779	2135	2242	2272	2544
BSQC36L	1580	1975	1779	2135	2242	2272	2544

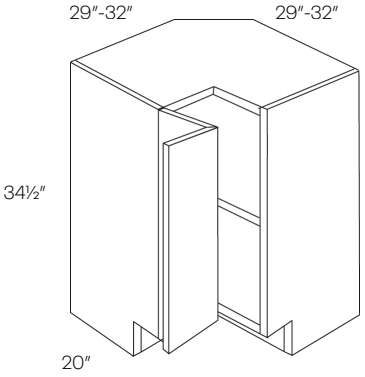

- Available in left or right hinge
- Left hand shown

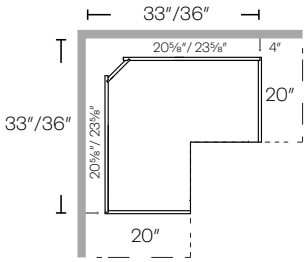

Lazy Susan Corner Base Cabinet

LS36R	1637	2047	2303	2764	2902	2354	2636
LS36L	1637	2047	2303	2764	2902	2354	2636

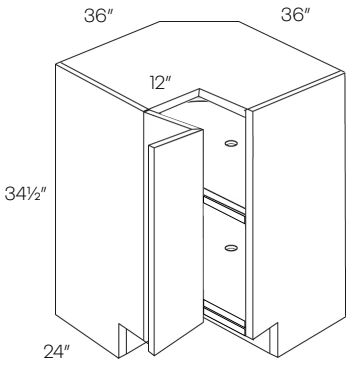

- Requires 36″x36″wall space
- Pie cut for 36″ is 12″
- Available in left or right hinge
- Natural wood lazy susan
- Left hand shown
- Metal Rev-a-Shelf upgrade available

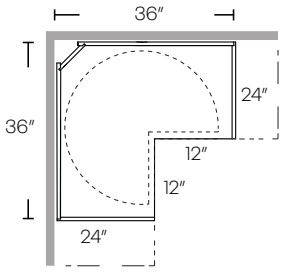

				Plus Program		Alvic	
Item Number	E	F	G	H	I	J	K
CAR33R	1637	2047	2303	2764	2902	2354	2636
CAR33L	1637	2047	2303	2764	2902	2354	2636
CAR36R	1637	2047	2303	2764	2902	2354	2636
CAR36L	1637	2047	2303	2764	2902	2354	2636

Carousel Corner Base Cabinet

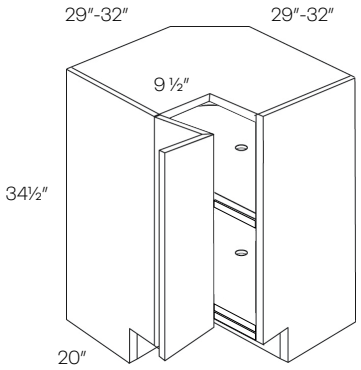

- Requires 33″x33″ / 36″x36″wall space
- Pie cut for 33″ is 9″ for 36″ is 12″
- Available in left or right hinge
- Natural wood lazy susan
- Left hand shown

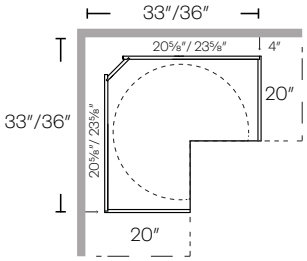

SB24	746	933	867	1041	1093	1073	1202
SB27	802	1003	936	1124	1180	1153	1292

1 Drawer Front 2 Door Sink Base Cabinet

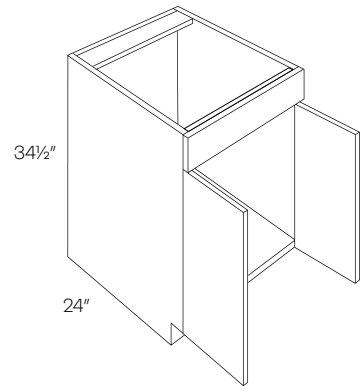

SB30	849	1062	991	1190	1249	1221	1367
SB33	899	1124	1059	1271	1335	1293	1448
SB36	921	1152	1070	1284	1349	1324	1483
SB39	944	1180	1141	1370	1438	1357	1520
SB42	965	1207	1168	1402	1472	1388	1554

2 Drawer Front 2 Door Sink Base Cabinet

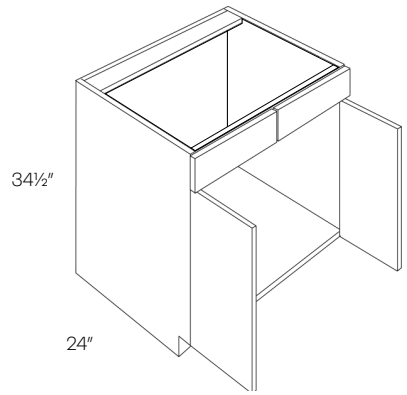

1 Drawer Front 2 Door Sink Base Cabinet

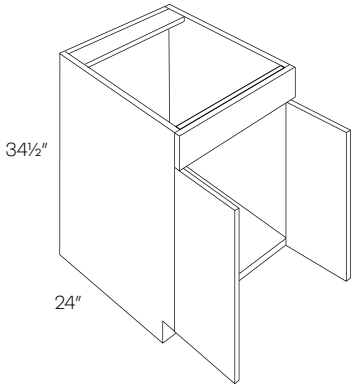

Item Number	E	F	G	Plus Program H	Plus Program I	Alvic J	Alvic K
SB30-SDF	849	1062	991	1190	1249	N/A	N/A
SB33-SDF	899	1124	1059	1271	1335	N/A	N/A
SB36-SDF	921	1152	1070	1284	1349	N/A	N/A

2 Door Farm Sink Base Cabinet

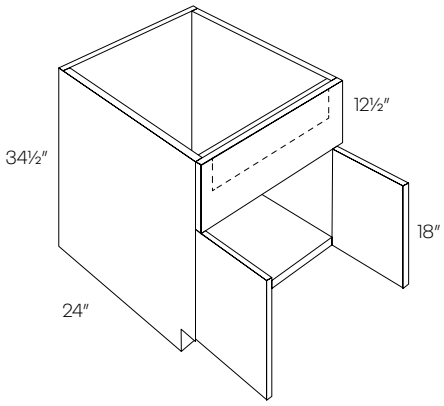

SB30-FS	1034	1292	1106	1327	1394	1486	1664
SB33-FS	1100	1375	1179	1414	1485	1581	1770
SB36-FS	984	1230	1190	1428	1499	1415	1584

- Max trimmable 27″/30″/33″ X 10″
- Trimming to be done in field
- Has a fixed platform

Oven & Microwave Base Cabinet

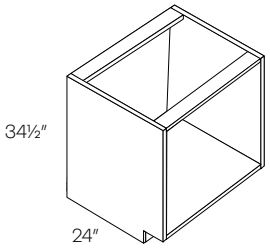

OVB

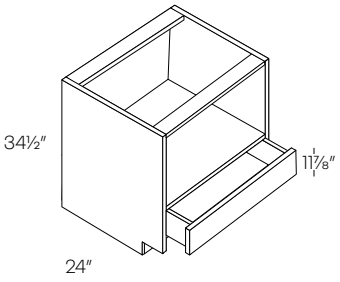

MCB

Item Number	E	F	G	Plus Program H	Plus Program I	Alvic J	Alvic K
OVB30	675	844	760	912	958	971	1087
MCB24	744	930	1278	1534	1611	1070	1198
MCB24-TRM	310	388	N/A	335	352	446	500
MCB27	799	999	1328	1594	1674	1149	1287
MCB27-TRM	342	428	N/A	369	387	492	551
MCB30	849	1062	1379	1655	1738	1221	1367
MCB30-TRM	373	467	N/A	402	423	537	601

• OVB Front opening is 28½″ x 29″

Cabinet	Front Opening Dimension	Trim Kit Dimensions
MCB24	22½″ x 17¾″	23⅞″ x 18⅛″
MCB27	25½″ x 17¾″	26⅞″ x 18⅛″
MCB30	28½″ x 17¾″	29⅞″ x 18⅛″

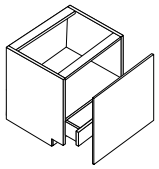

Trim Kit
Keku clip attachment

Base End Cabinet

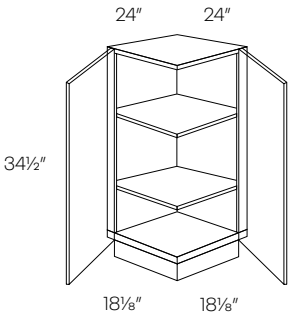

BEC24	697	872	875	1050	1103	1002	1123

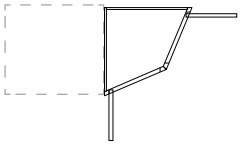

Base End Straight Cabinet

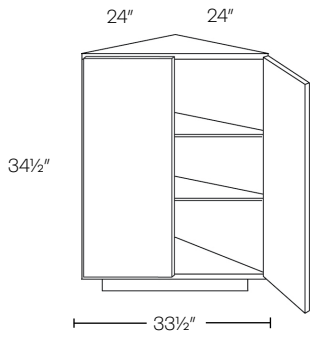

BECS24	779	974	875	1050	1103	1120	1255

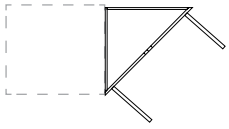

Angle Base End Cabinet

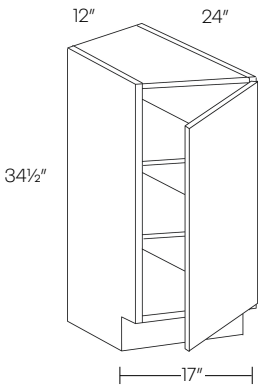

Item Number	E	F	G	Plus Program H	Plus Program I	Alvic J	Alvic K
BTC2412	560	700	710	852	895	805	902

- Reversible
- Loose Toe Kick
- Hinged on 24″

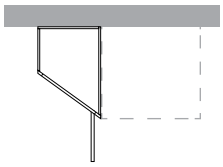

Waste Basket Cabinet

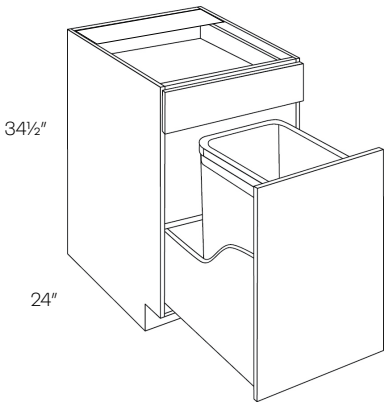

BWBK15

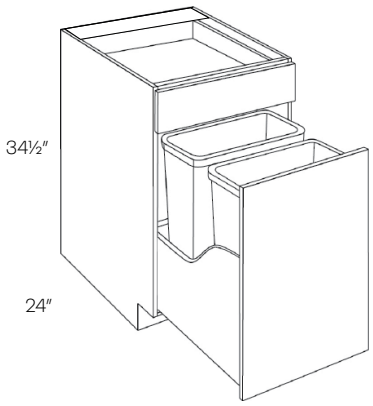

BWBK18

BWBK15 (1 basket)	1133	1417	1200	1440	1512	1629	1825
BWBK18 (2 basket)	1255	1569	1272	1527	1603	1805	2021

- BWBK15 includes 35qt. waste basket
- BWBK18 includes 2-35qt. waste baskets
- Undermount soft-close glides
- Solid wood dovetail box

Full Height Double Waste Basket Cabinet

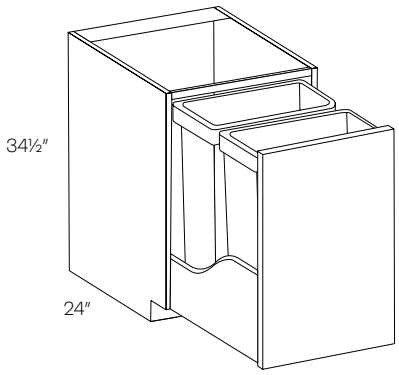

				Plus Program		Alvic	
Item Number	E	F	G	H	I	J	K
BWBK21-FH	1382	1728	1555	1866	1960	1987	2226

- Includes two 50qt. waste baskets
- Undermount soft-close glides
- Solid wood dovetail box

Single Door Base Cabinet

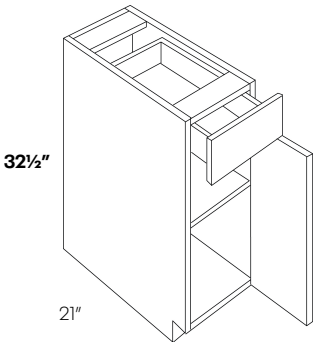

				Plus Program		Alvic	
Item Number	E	F	G	H	I	J	K
B9-HA	491	614	N/A	N/A	N/A	706	791
B12-HA	566	708	N/A	N/A	N/A	814	912
B15-HA	591	739	N/A	N/A	N/A	850	952
B18-HA	622	778	N/A	N/A	N/A	895	1002
B21-HA	707	884	N/A	N/A	N/A	1017	1139

* Please note, Handicap Accessible cabinets may not meet ADA requirements

Single Door Double Drawer Base Cabinet

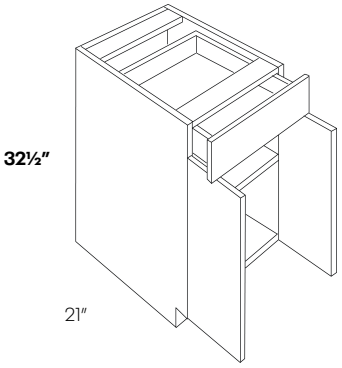

B24-HA	792	990	N/A	N/A	N/A	1139	1276
B27-HA	875	1094	N/A	N/A	N/A	1258	1409

* Please note, Handicap Accessible cabinets may not meet ADA requirements

Double Door Double Drawer Base Cabinet

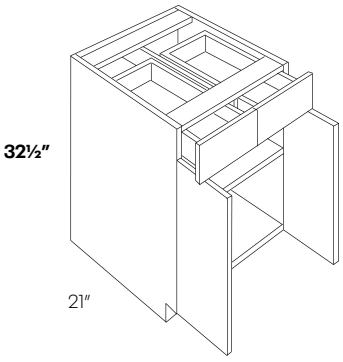

B30-HA	953	1192	N/A	N/A	N/A	1370	1535
B33-HA	1017	1272	N/A	N/A	N/A	1462	1638
B36-HA	1066	1333	N/A	N/A	N/A	1533	1717
B39-HA	1134	1418	N/A	N/A	N/A	1631	1826

* Please note, Handicap Accessible cabinets may not meet ADA requirements

				Plus Program		Alvic	
Item Number	E	F	G	H	I	J	K
DB12-HA	874	1093	N/A	N/A	N/A	1257	1408
DB15-HA	915	1144	N/A	N/A	N/A	1316	1474
DB18-HA	943	1179	N/A	N/A	N/A	1356	1519

Three Drawer Base Cabinet

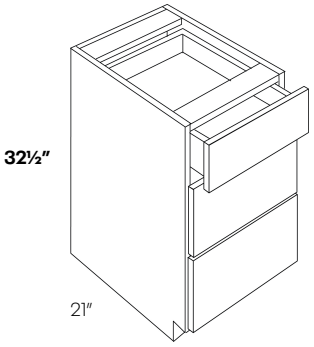

* Please note, Handicap Accessible cabinets may not meet ADA requirements

Blind Base Cabinet

BLB36/39-HA	1008	1260	N/A	N/A	N/A	1449	1623

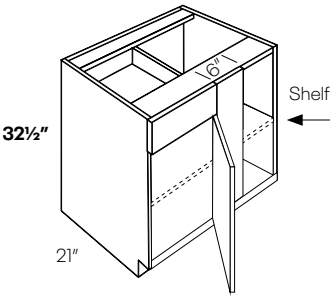

- Reversible Left or Right
- Must be pulled to the minimum position

* Please note, Handicap Accessible cabinets may not meet ADA requirements

Cabinet	Min. Pull	Max. Pull	Actual Size	Door	Door Opening
BLB36/39	36"	39"	27"	B9	8.25"

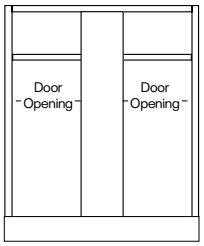

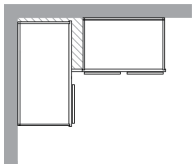

Lazy Susan Corner Base Cabinet

CAR36L-HA	1637	2047	N/A	N/A	N/A	2394	2684
CAR36R-HA	1637	2047	N/A	N/A	N/A	2394	2684

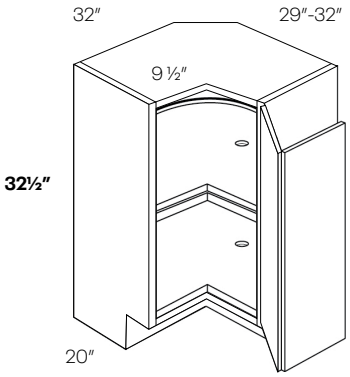

* Please note, Handicap Accessible cabinets may not meet ADA requirements

- Requires 33"x33" / 36"x36"wall space
- Pie cut for 33" is 9" for 36" is 12"
- Available in left or right hinge
- Natural wood lazy susan

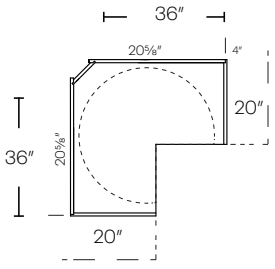

Removable Sink Base

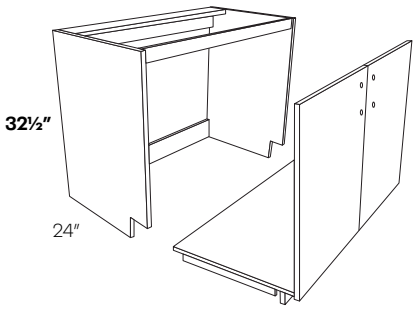

Item Number	E	F	G	Plus Program H	Plus Program I	Alvic J	Alvic K
SB30-HR	1189	1486	N/A	N/A	N/A	1709	1914
SB33-HR	1259	1574	N/A	N/A	N/A	1810	2027
SB36-HR	1290	1612	N/A	N/A	N/A	1854	2076

* Please note, Handicap Removable cabinets may not meet ADA requirements

Removable Vanity Base

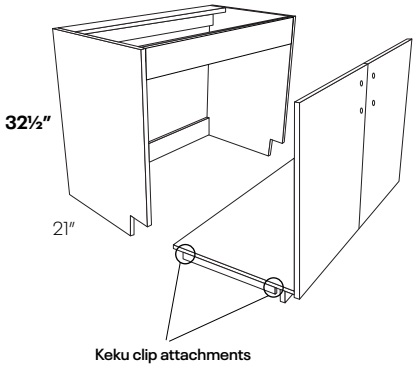

V30-HR	923	1154	N/A	N/A	N/A	1327	1486
V33-HR	1430	1787	N/A	N/A	N/A	2055	2302
V36-HR	1116	1395	N/A	N/A	N/A	1604	1797

* Please note, Handicap Removable cabinets may not meet ADA requirements
• Keku connection on the floor

Vanity Sink Base Cabinet

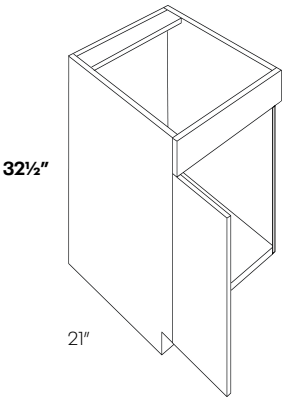

V24-HA	529	662	N/A	N/A	N/A	761	852
V30-HA	659	824	N/A	N/A	N/A	948	1061
V36-HA	797	997	N/A	N/A	N/A	1146	1284

* Please note, Handicap Accessible cabinets may not meet ADA requirements

Vanity Drawer Base Cabinet

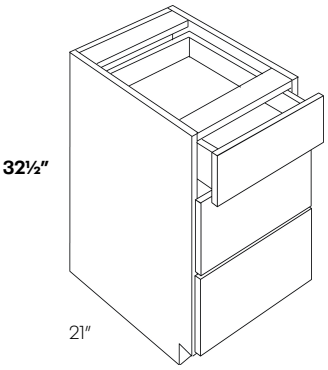

				Plus Program		Alvic	
Item Number	E	F	G	H	I	J	K
VDB12-HA	866	1083	N/A	N/A	N/A	1245	1395
VDB15-HA	918	1148	N/A	N/A	N/A	1320	1478
VDB18-HA	940	1175	N/A	N/A	N/A	1352	1514

* Please note, Handicap Accessible cabinets may not meet ADA requirements

Pantry Cabinet

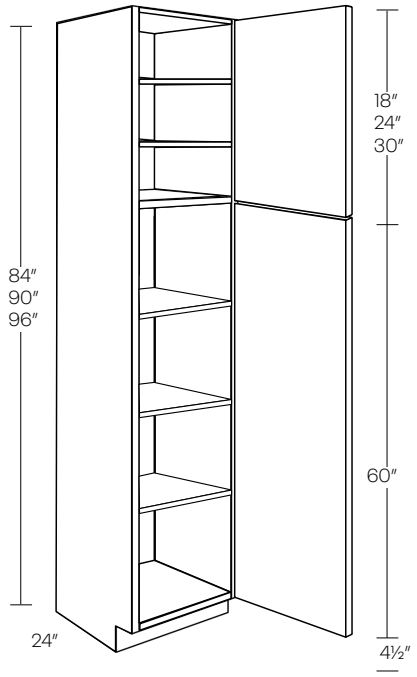

				Plus Program		Alvic	
Item Number	E	F	G	H	I	J	K
PC1524x84	1887	2359	N/A	N/A	N/A	N/A	N/A
PC1524X90	2078	2598	N/A	N/A	N/A	N/A	N/A
PC1524X96*	2284	2855	N/A	N/A	N/A	N/A	N/A
PC1824X84	1884	2355	N/A	N/A	N/A	N/A	N/A
PC1824X90	2147	2684	N/A	N/A	N/A	N/A	N/A
PC1824X96	2450	3063	N/A	N/A	N/A	N/A	N/A
PC2424X84	2169	2712	N/A	N/A	N/A	N/A	N/A
PC2424X90	2476	3095	N/A	N/A	N/A	N/A	N/A
PC2424X96	2739	3424	N/A	N/A	N/A	N/A	N/A
PC3024X84	2278	2848	N/A	N/A	N/A	N/A	N/A
PC3024X90	2600	3250	N/A	N/A	N/A	N/A	N/A
PC3024X96	2876	3595	N/A	N/A	N/A	N/A	N/A
POS15-3	1071	1071	N/A	N/A	N/A	N/A	N/A
POS15-4	1237	1237	N/A	N/A	N/A	N/A	N/A
POS18-3	1152	1152	N/A	N/A	N/A	N/A	N/A
POS18-4	1273	1273	N/A	N/A	N/A	N/A	N/A
POS24-3	1308	1308	N/A	N/A	N/A	N/A	N/A
POS24-4	1744	1744	N/A	N/A	N/A	N/A	N/A
POS30-3	1395	1395	N/A	N/A	N/A	N/A	N/A
POS30-4	1860	1860	N/A	N/A	N/A	N/A	N/A

- Undermounted soft-close glides
- Adjustable shleves
- Fixed shelf between doors

- White Satin Box: Metal box construction; BLUM upgrade available
- Maple Box: Maple box with dovetail construction; BLUM not available

* 84″ and 90″ has 2 upper shelves
* 96″ has 3 upper shelves

Single Door Utility Cabinet

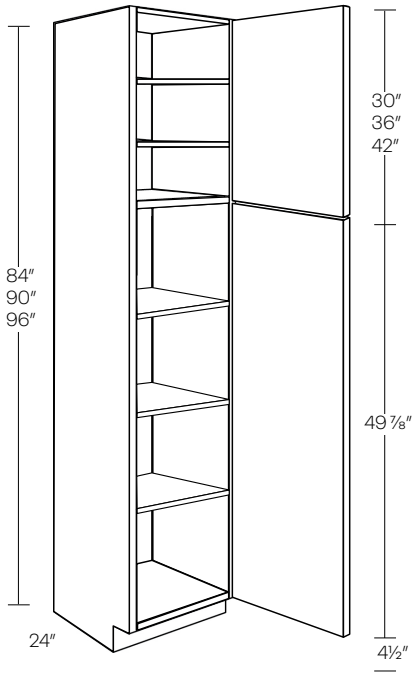

Item Number	E	F	G	Plus Program H	Plus Program I	Alvic J	Alvic K
UC1524X84	1887	2359	2125	2550	2678	2713	3039
UC1524X90	2078	2598	2339	2807	2948	2988	3346
UC1524X96*	2284	2855	2572	3087	3241	3284	3678
UC1824X84	1884	2355	2238	2686	2820	2709	3034
UC1824X90	2147	2684	2344	2813	2954	3087	3457
UC1824X96*	2450	3063	2708	3250	3413	3522	3945
POS15-3	1071	1071	993	993	993	1071	1071
POS15-4	1428	1428	1324	1324	1324	1428	1428
POS18-3	1152	1152	1065	1065	1065	1152	1152
POS18-4	1536	1536	1420	1420	1420	1536	1536

- POS price is in addition to the cabinet list price
- POS will be factory installed
- POS not available in 12″ deep UC
- Undermounted soft-close glides
- Adjustable shleves
- Fixed shelf between doors

- White Satin Box: Metal box construction; BLUM upgrade available
- Maple Box: Maple box with dovetail construction; BLUM not available

* 84″ and 90″ has 2 upper shelves
* 96″ has 3 upper shelves

Double Door Utility Cabinet

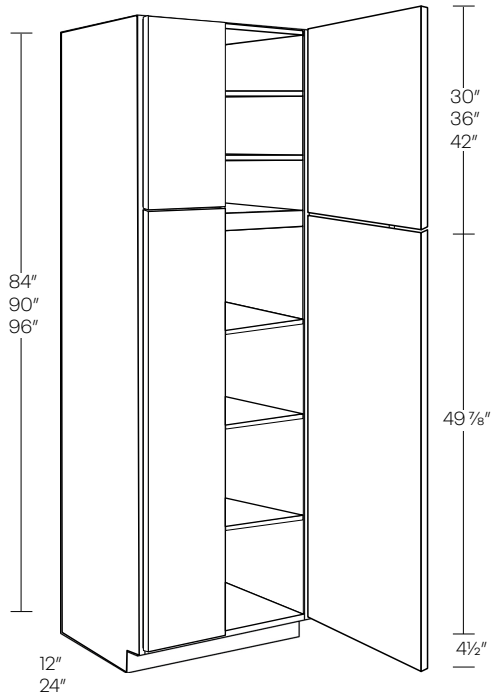

Item Number	E	F	G	Plus Program H	Plus Program I	Alvic J	Alvic K
UC2412X84	2050	2563	2306	2768	2906	2947	3301
UC2412X90	2254	2818	2537	3045	3197	3241	3629
UC2412X96*	2479	3099	2790	3348	3516	3564	3992
UC2424X84	2169	2712	2614	3137	3294	3118	3493
UC2424X90	2476	3095	2877	3453	3626	3560	3987
UC2424X96*	2739	3424	3165	3798	3988	3938	4410
UC3024X84	2278	2848	2763	3316	3482	3275	3668
UC3024X90	2600	3250	3166	3800	3990	3738	4186
UC3024X96*	2876	3595	3478	4174	4383	4135	4631
POS24-3	1308	1308	1209	1209	1209	1308	1308
POS24-4	1744	1744	1612	1612	1612	1744	1744
POS30-3	1395	1395	1284	1284	1284	1395	1395
POS30-4	1860	1860	1712	1712	1712	1860	1860

- POS price is in addition to the cabinet list price
- POS will be factory installed
- POS not available in 12″ deep UC
- Undermounted soft-close glides
- Adjustable shleves
- Fixed shelf between doors

  - White Satin Box: Metal box construction; BLUM upgrade available
- Maple Box: Maple box with dovetail construction; BLUM not available

* 84″ and 90″ has 2 upper shelves
* 96″ has 3 upper shelves

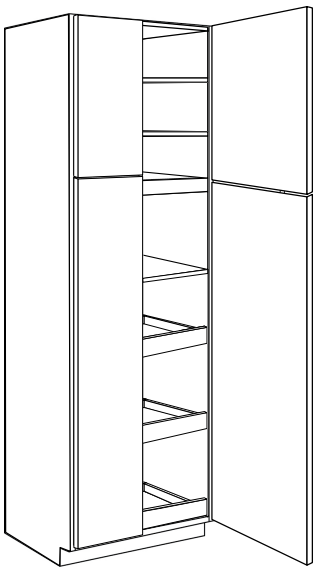

POS-3

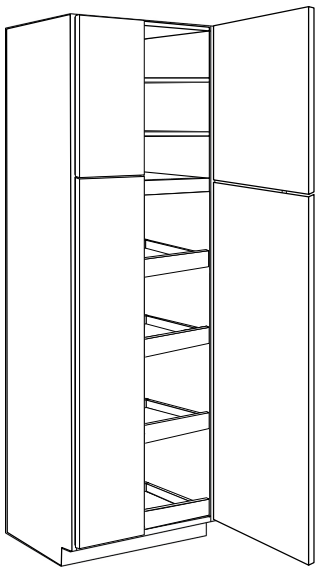

POS-4

Oven Cabinet

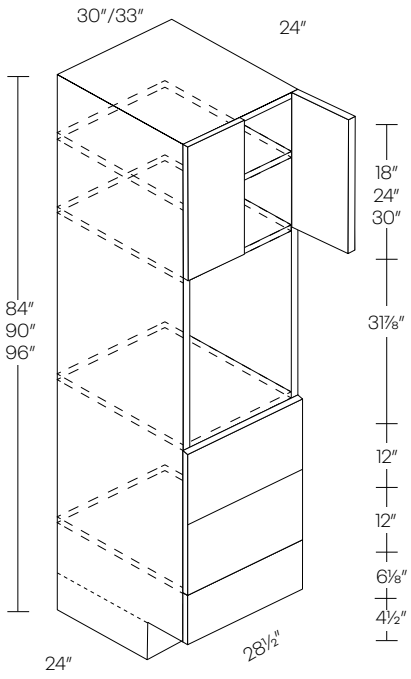

Item Number	E	F	G	Plus Program H	Plus Program I	Alvic J	Alvic K
OV3084	2048	2560	2673	3208	3368	2944	3298
OV3090	2358	2948	2840	3408	3579	3390	3797
OV3096*	2665	3332	3004	3605	3786	3831	4291
OV3384	2092	2615	2780	3336	3503	3008	3369
OV3390	2404	3005	2953	3544	3721	3456	3871
OV3396	2710	3388	3124	3749	3937	3896	4364

- Has 2 upper shelves
- Trim kit included
- Maximum vertical opening is 52.5″
- For double wall ovens, remove drawers as needed

Side

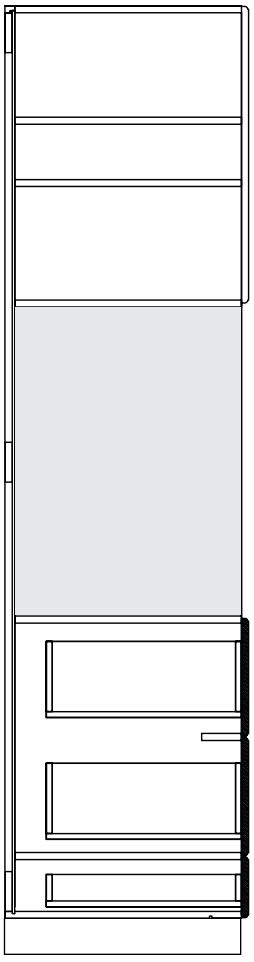

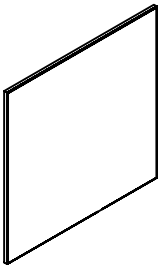

Trim Kit

Keku clip attachment
***Clips shipped loose**

OV30-TRM: 29.5″ X 29.75″
OV33-TRM: 29.5″ x 32.75″

Bottom drawers open

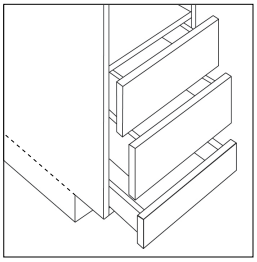

Double Oven Cabinet

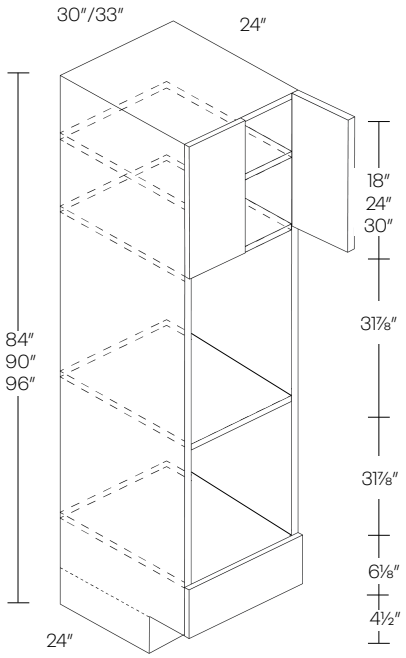

Item Number	E	F	G	Plus Program H	Plus Program I	Alvic J	Alvic K
OVD3084	1974	2468	2673	3208	3368	2838	3179
OVD3090	2280	2850	2840	3408	3579	3278	3671
OVD3096*	2590	3238	3004	3605	3786	3724	4170
OVD3384	2092	2615	2780	3336	3503	3008	3369
OVD3390	2404	3005	2953	3544	3721	3456	3871
OVD3396*	2721	3402	3124	3749	3937	3912	4381

* Has 2 upper shelves
- Trim kit included
- Maximum vertical opening is 52.5″
- For double wall ovens, remove drawers as needed

Side

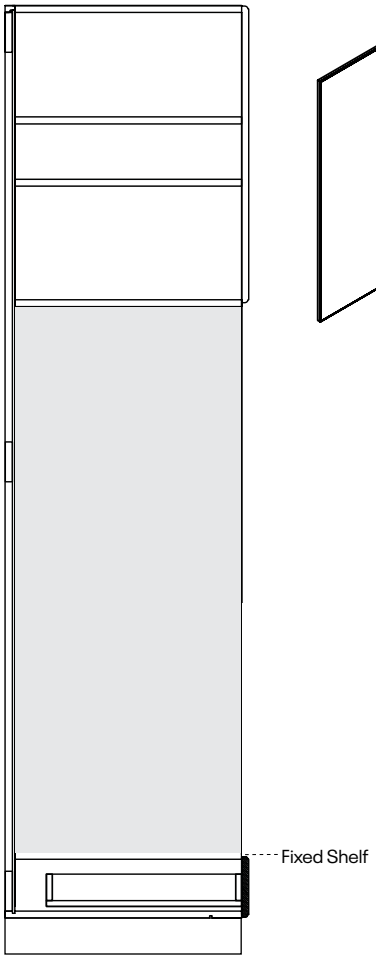

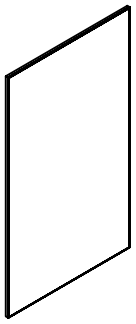

Trim Kit

Keku clip attachment
***Clips shipped loose**

OVD30-TRM: 54.5″ X 29.75″
OVD33-TRM: 54.5″ x 32.75″

Pull Out Shelf

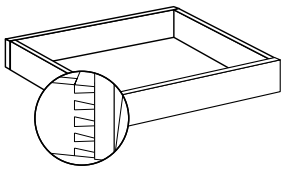

POS - Maple Cabinet Box

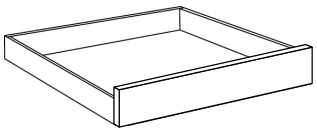

POS - White Cabinet Box

Item Number	E	F	G	Plus Program H	Plus Program I	Alvic J	Alvic K
POS12	246	308	221	266	279	354	397
POS15	257	322	231	278	292	370	414
POS18	284	355	255	306	322	409	458
POS21	298	373	268	322	338	429	480
POS24	336	420	303	364	382	483	541
POS27	351	439	315	378	397	505	566
POS30	365	457	328	394	414	525	588
POS33	381	477	343	412	433	548	614
POS36	409	512	367	441	463	588	659
POS42	428	535	385	462	486	616	690

- Undermount soft-close glides
- POS uses dovetail construction
- Two spacers required
- BLUM glides not available on POS

Modern Wood Hood

WHM30	N/A	N/A	4110	4932	5179	N/A	N/A
WHM36	N/A	N/A	4931	5918	6214	N/A	N/A

- Metal Liners Included

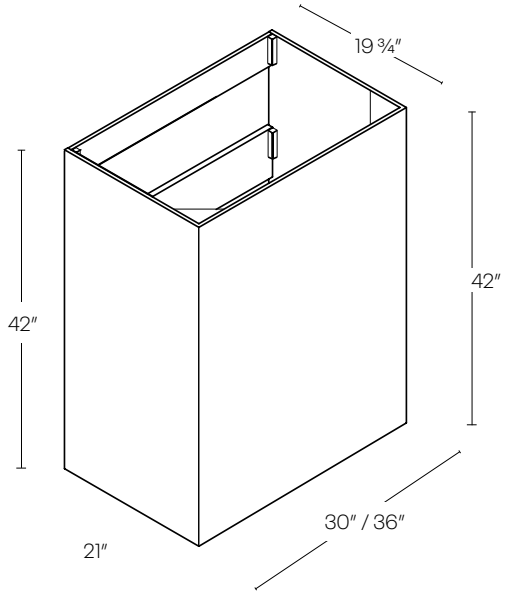

30″ Hood Liner

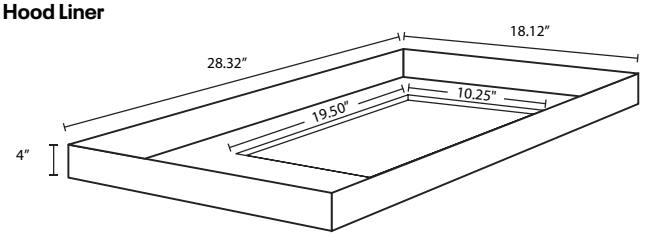

36″ Hood Liner

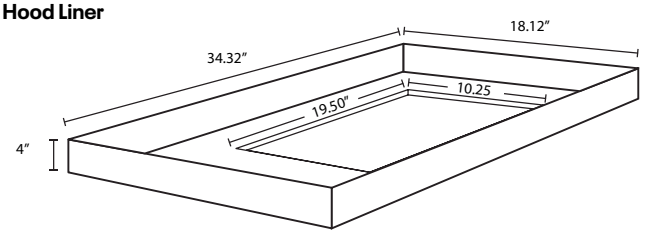

Boxed Wood Hood

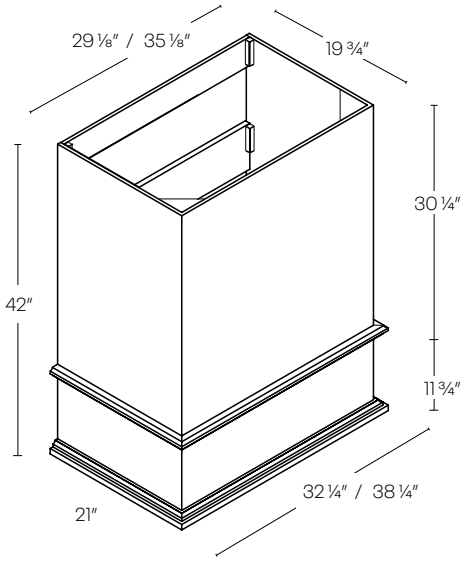

Item Number	E	F	G	Plus Program H	Plus Program I	Alvic J	Alvic K
WHB30	N/A	N/A	2788	3346	3513	N/A	N/A
WHB36	N/A	N/A	3345	4014	4215	N/A	N/A

•Metal Liners Included

30" Hood Liner

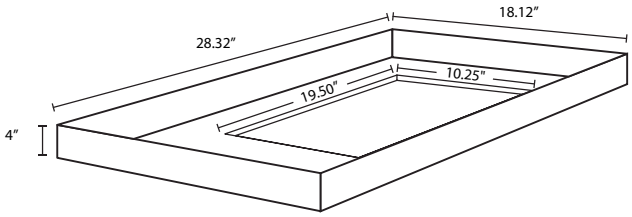

36" Hood Liner

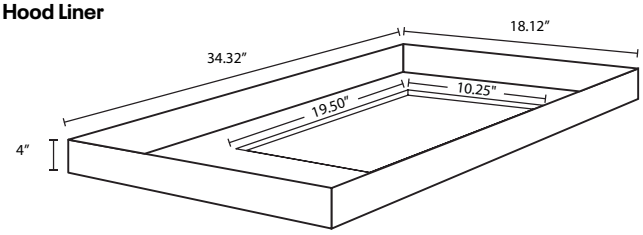

Coved Wood Hood

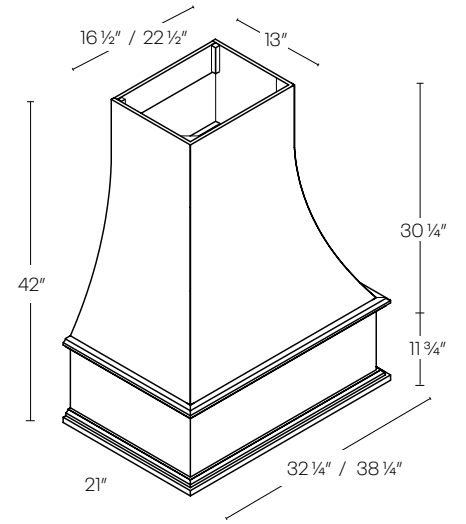

WHC30	N/A	N/A	2788	3346	3513	N/A	N/A
WHC36	N/A	N/A	3345	4014	4215	N/A	N/A

•Metal Liners Included

30" Hood Liner

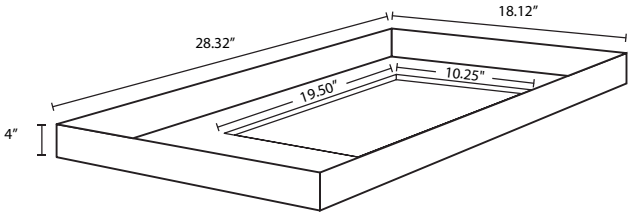

36" Hood Liner

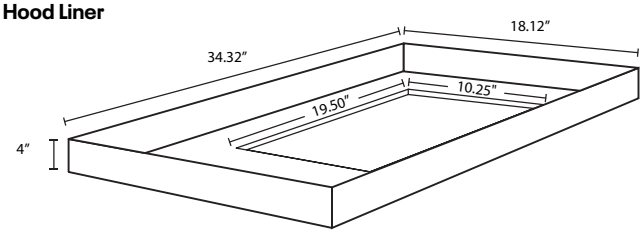

Sloped Wood Hood

Item Number	E	F	G	Plus Program H	Plus Program I	Alvic J	Alvic K
WHS30	N/A	N/A	2788	3346	3513	N/A	N/A
WHS36	N/A	N/A	3345	4014	4215	N/A	N/A

•Metal Liners Included

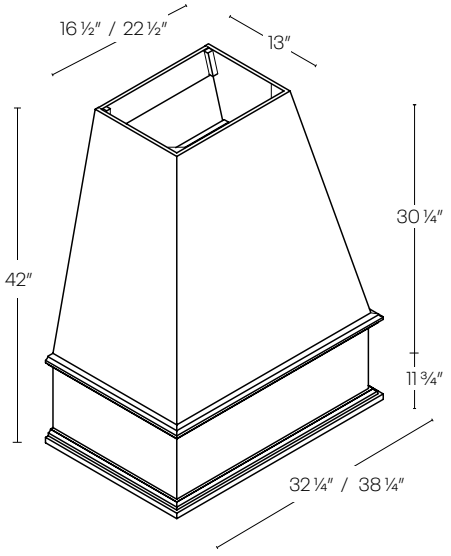

30" Hood Liner

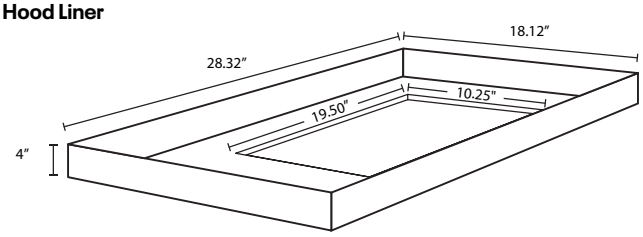

36" Hood Liner

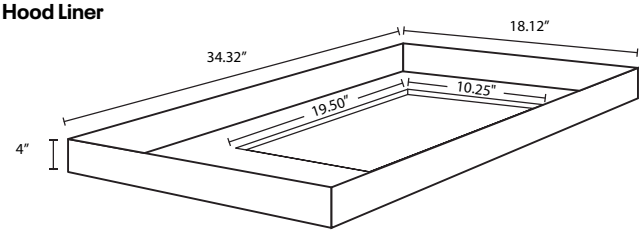

Traditional Wood Hood

WHT30	N/A	N/A	2788	3346	3513	N/A	N/A
WHT36	N/A	N/A	3345	4014	4215	N/A	N/A

•Metal Liners Included

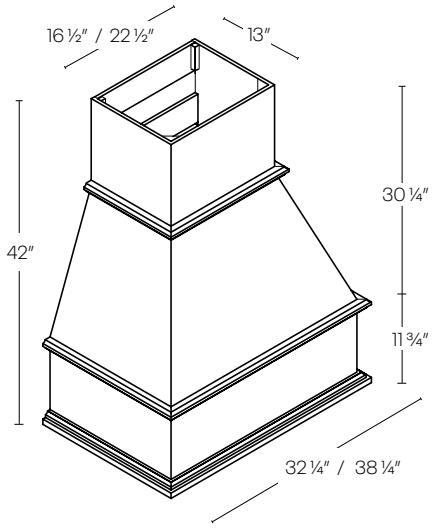

30" Hood Liner

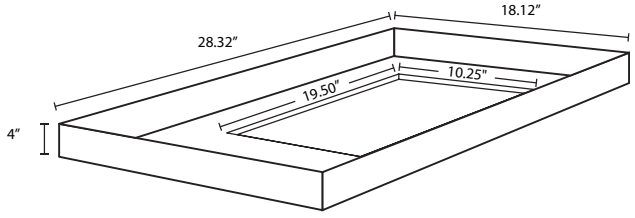

36" Hood Liner

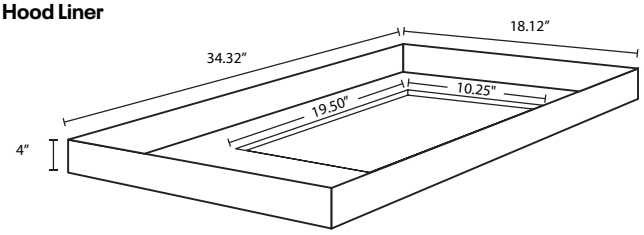

1 Door Vanity Base Cabinet

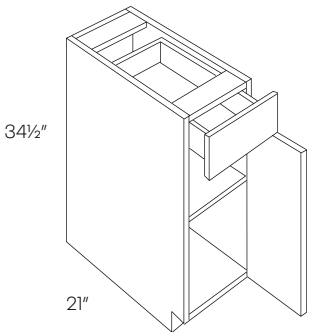

2 Door Vanity Base Cabinet

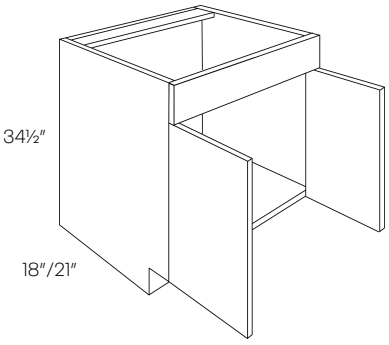

1 Door 2 Drawer Vanity Base Cabinet

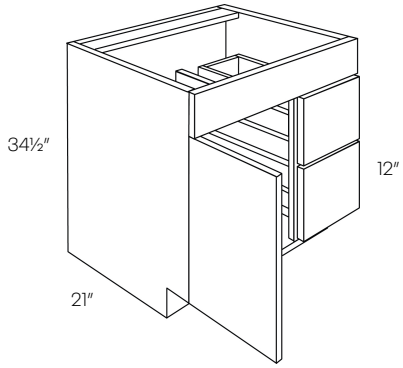

Item Number	E	F	G	Plus Program H	Plus Program I	Alvic J	Alvic K
VB12	542	678	680	816	857	780	873
VB15	568	710	710	852	895	817	915
VB18	595	744	643	772	811	856	958
V2418	489	612	489	587	617	703	788
V3018	622	778	622	747	784	895	1002
V24	529	662	801	962	1010	761	852
V27	585	732	855	1026	1078	841	942
V30	659	824	908	1090	1145	948	1061
V33	759	949	956	1148	1205	1092	1222
V36	797	997	1004	1205	1266	1146	1284
V42	925	1157	1114	1337	1404	1721	1929
V30DL	1095	1369	1278	1534	1611	1575	1763
V30DR	1095	1369	1278	1534	1611	1575	1763

	Item Number	E	F	G	Plus Program H	Plus Program I	Alvic J	Alvic K
2 Door 2 Drawer Vanity Base Cabinet	**V36DL**	1179	1474	1314	1577	1656	1695	1899
	V36DR	1179	1474	1314	1577	1656	1695	1899

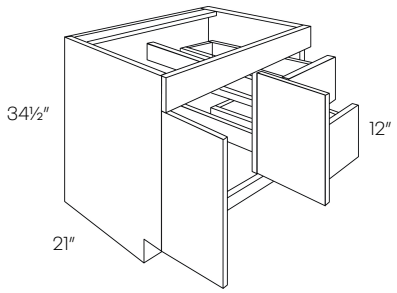

2 Door 2 Drawer Vanity Base Cabinet	**V42DL**	1197	1497	1469	1763	1851	1721	1928
	V42DR	1197	1497	1469	1763	1851	1721	1928

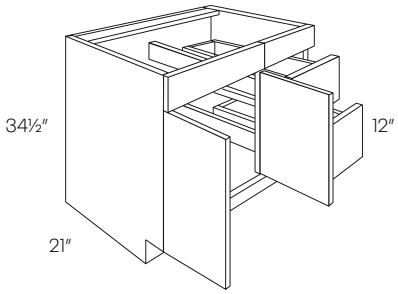

2 Door & Drawer Vanity Base Cabinet	**V48DD**	1367	1709	1599	1919	2015	1966	2201

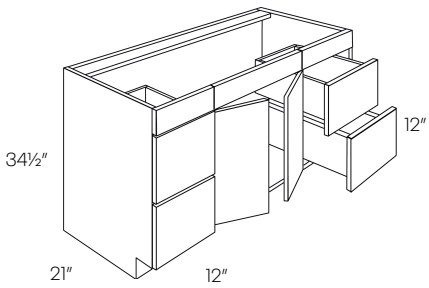

Vanity Drawer Base Cabinet

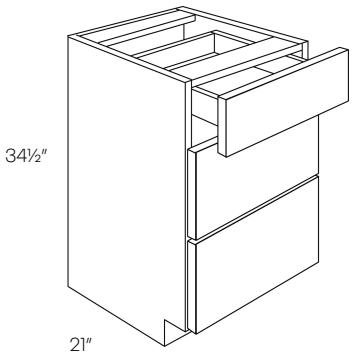

				Plus Program		Alvic	
Item Number	E	F	G	H	I	J	K
VDB12	866	1083	1012	1215	1276	1245	1395
VDB15	918	1148	1056	1268	1331	1320	1478
VDB18	940	1175	1080	1296	1361	1352	1514
VDB21	956	1195	1127	1353	1421	1375	1540
VDB24	986	1233	1177	1413	1484	1418	1588

Double Drawer Floating Vanity

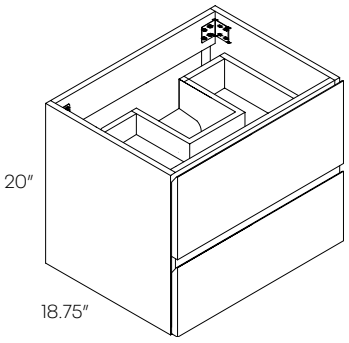

				Plus Program		Alvic	
Item Number	E	F	G	H	I	J	K
FVDB2418	878	1080	N/A	N/A	N/A	N/A	N/A
FVDB3018	947	1179	N/A	N/A	N/A	N/A	N/A
FVDB3618	1027	1294	N/A	N/A	N/A	N/A	N/A

• Only available in Broadway Cotton (BM600), Broadway Beach (BM655), Milano Polar White (MP400) and Milano Sand (MP402)
• Classic box construction
• Interior matches door color
• Metal Drawer Box
• Soft-close glides

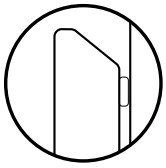

Finger-pull

Double Door Floating Vanity

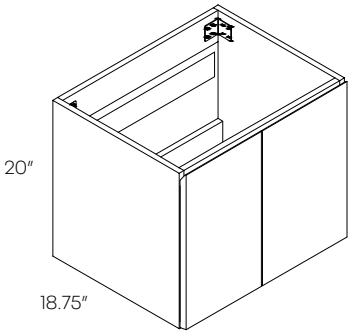

FV2418	404	580	N/A	N/A	N/A	N/A	N/A
FV3018	448	653	N/A	N/A	N/A	N/A	N/A
FV3618	491	724	N/A	N/A	N/A	N/A	N/A

• Only available in Broadway Cotton (BM600), Broadway Beach (BM655), Milano Polar White (MP400) and Milano Sand (MP402• Classic box construction
• Interior matches door color
• Metal Drawer Box
• Soft-close hinges

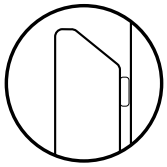

Finger-pull

Floating Vanity Top

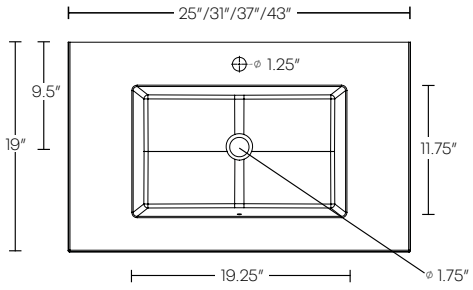

FT2-2519	442	442	N/A	N/A	N/A	N/A	N/A
FT2-3119	541	541	N/A	N/A	N/A	N/A	N/A
FT2-3719	578	578	N/A	N/A	N/A	N/A	N/A
FT2-4319	623	623	N/A	N/A	N/A	N/A	N/A

• Only available in white
• Plumbing should be coming out of the wall at a minimum height of 20″ off the floor. If using a vessel sink you can adjust accordingly, based on your sink height.

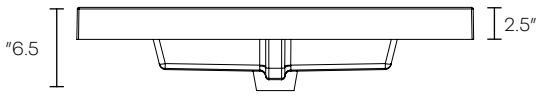

Filler

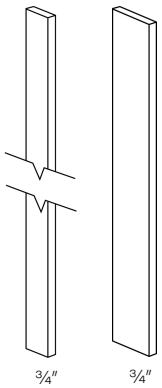

Item Number	E	F	G	Plus Program H	Plus Program I	Alvic J	Alvic K
F330	65	82	58	70	74	94	105
F342	85	107	76	92	96	123	137
F396	199	249	179	215	226	287	321
F630	111	139	100	120	126	160	179
F642	150	188	134	161	169	216	242
F696	329	412	296	356	373	473	530
F3120	N/A	N/A	265	318	334	N/A	N/A
F6120	N/A	N/A	409	491	516	N/A	N/A

- Overlays available for Alvic
- Fillers finished on all 4 edges
- Front is finished

Refrigerator & Dishwasher End Panel

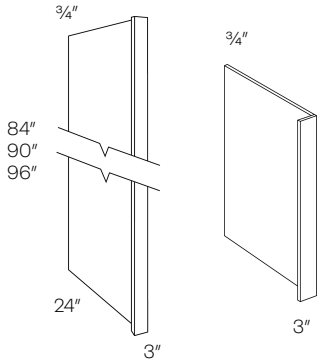

REP DWR

REP384	583	729	525	630	662	N/A	N/A
REP390	613	767	551	662	695	N/A	N/A
REP396	642	803	578	694	729	N/A	N/A
DWR3	337	422	304	365	384	N/A	N/A
DWR6	375	469	337	405	425	N/A	N/A

- Finished on 2 sides
- If textured, one side will have a flat finish

Plywood Panel

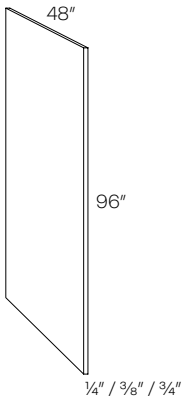

PLY4X8.25	509	637	458	550	578	N/A	N/A
PLY4X8X.375	1000	1155	N/A	N/A	N/A	N/A	N/A
PLY4X8X.75	1424	1780	1476	1772	1860	N/A	N/A

- Finished on 2 sides
- If textured, one side will have a flat finish

Collection	Width
Versailles/Highland	¼″
Broadway/Milano	⅜″

End Panel

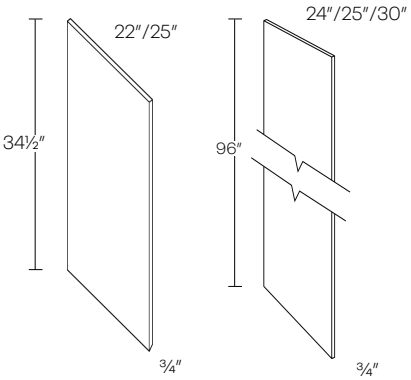

VEP/BEP UREP30

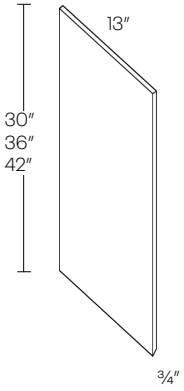

WEP

Item Number	E	F	G	Plus Program H	Plus Program I	Alvic J	Alvic K
VEP22	310	388	310	372	391	446	500
BEP25	296	370	266	320	336	426	477
WEP30	180	225	180	216	227	259	290
WEP36	217	272	217	261	274	312	350
WEP42	252	315	252	303	318	363	406
UREP24	N/A	N/A	403	484	508	N/A	N/A
UREP25	914	1143	914	1097	1152	1314	1472
UREP30	595	744	536	644	676	856	958

*Price per square foot
- Broadway and Milano end panels are MDF
- Panels are finished on one long side

Full Overlay Crown Moldings

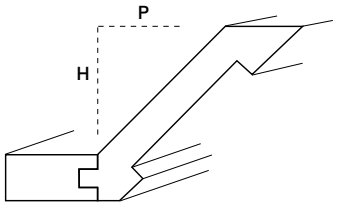

MFLOCR
Height: 3½″
Projection: 2½″

MFLOCR	N/A	N/A	443	532	559	N/A	N/A

- 8 Feet long

					Plus Program		Alvic	
	Item Number	E	F	G	H	I	J	K
Contemporary Crown Molding	**CCM**	492	615	443	532	559	N/A	N/A

- 8 Feet long
- Outer ends are finished
- Not available in Alvic

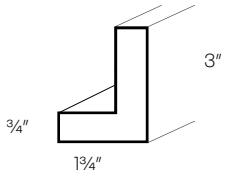

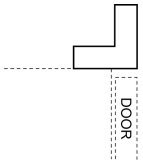

Suggested Use

Shoe Molding	**SHM**	149	187	133	160	168	N/A	N/A

- 8 Feet long
- Not available in Alvic

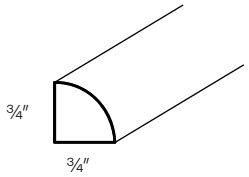

Column	**CLM-B30** (34½″H X 30″D)	559	699	503	604	634	N/A	N/A
	CLM-30X15 (30″H X 15″D)	284	355	255	306	322	N/A	N/A
	CLM-36X15 (36″H X 15″D)	317	397	285	342	360	N/A	N/A
	CLM-42X15 (42″H X 15″D)	352	440	316	380	399	N/A	N/A

- Finished 3 sides
- Trimmable
- Not available in Alvic

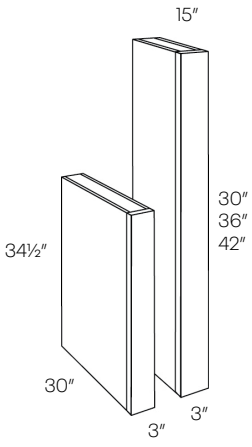

Corner Molding

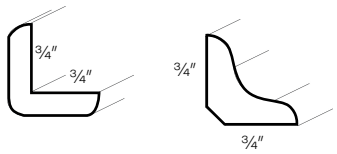

OCM ICM

Item Number	E	F	G	Plus Program H	Plus Program I	Alvic J	Alvic K
OCM	133	167	120	144	152	N/A	N/A
ICM	133	167	120	144	152	N/A	N/A

- 8 Feet long
- Not available in Alvic

Toe Kick

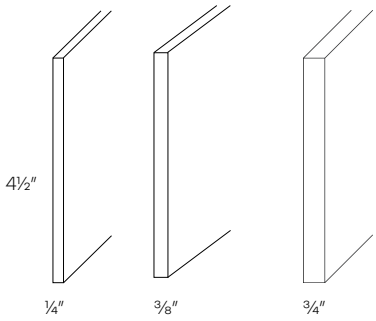

TKS.25	N/A	N/A	100	120	126	N/A	N/A
TKS.375	111	139	N/A	N/A	N/A	N/A	N/A
TKS.75	274	343	277	333	350	160	179

- TKS is 8 Feet long

Collection	Width
Versailles/Highland	¼″
Broadway/Milano	⅜″
Alvic	¾″

Toe Kick End Cap

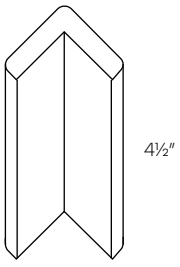

TKS-CAP	63	79	64	77	81	N/A	N/A

- Top and bottom sides are finished

					Plus Program		Alvic	
Item Number	E	F	G	H	I	J	K

Scribe Molding

SCM	109	137	98	118	124	N/A	N/A
BAT	N/A	N/A	98	118	124	N/A	N/A

- 8 Feet long
- Not available in Alvic

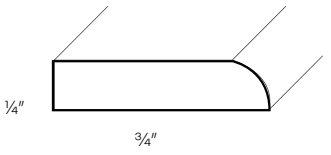

SCM

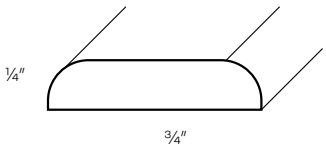

BAT

Post –

POST-S	N/A	N/A	1230	1476	1550	N/A	N/A

- 3″ X 3″

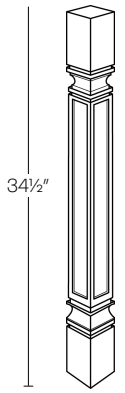

POST-S

Corner Post

POST-S-CR	N/A	N/A	438	526	552	N/A	N/A

- 3″ X 3″

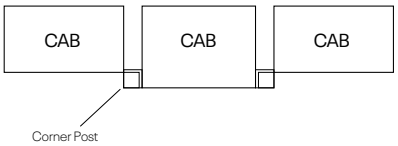

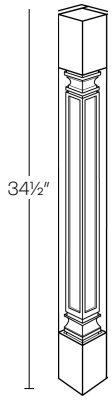

POST-S-CR

				Plus Program		Alvic	
Item Number	E	F	G	H	I	J	K

Large Post

POST5-C	N/A	N/A	990	1188	1248	N/A	N/A

• 5″ X 5″

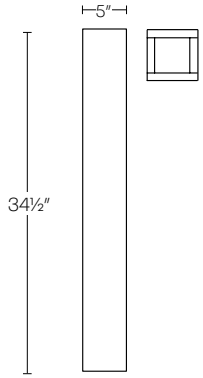

POST5-C

Royal Crown Molding

RCRMC	N/A	N/A	443	532	559	N/A	N/A
RCRMR	N/A	N/A	443	532	559	N/A	N/A

• 8 Feet long

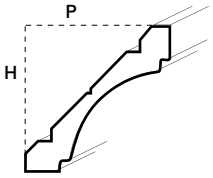

COVE
RCRMC
Height: 3⅛″
Projection: 3⅛″

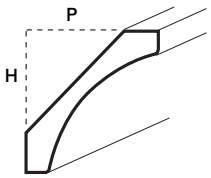

ROUND
RCRMR
Height: 2 1⁄16″
Projection: 1 15⁄16″

Light Rail Molding

LTRM1	N/A	N/A	231	278	292	N/A	N/A
LTRM2	N/A	N/A	260	312	328	N/A	N/A
LTRM3	N/A	N/A	346	416	436	N/A	N/A

• 8 Feet long

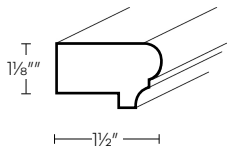

LTRM1

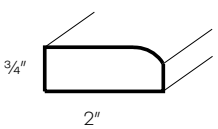

LTRM2

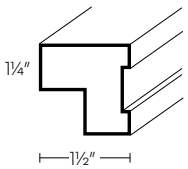

LTRM3

					Plus Program		Alvic	
	Item Number	E	F	G	H	I	J	K
Base Molding	**BSMS**	N/A	N/A	316	380	399	N/A	N/A

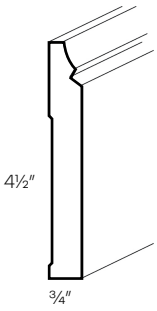

Trim Molding	**TBMS**	N/A	N/A	145	174	183	N/A	N/A

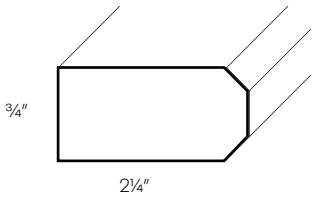

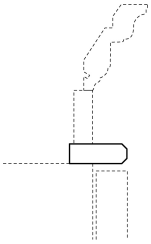

*Suggested use

Decorative End	**WDE1230**	174	218	196	236	247	N/A	N/A
	WDE1236	249	312	278	334	351	N/A	N/A
	WDE1242	290	363	326	392	411	N/A	N/A
	WDE1250	358	448	403	484	508	N/A	N/A
	BDE24	416	520	469	563	591	N/A	N/A

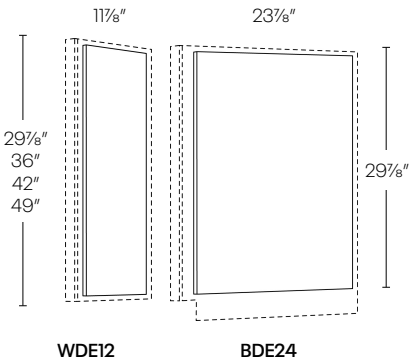

• Use finished skin to flush with frame

Edgeband

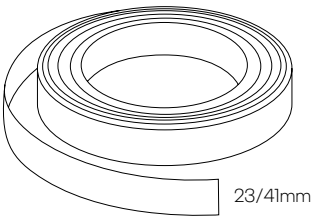

Item Number	E	F	G	Plus Program H	I	Alvic J	K
EDGEBAND	23	29	21	26	27	34	38

* Alvic Edgeband only sold in roll
• Price is per lineal foot

Matching Edgeband

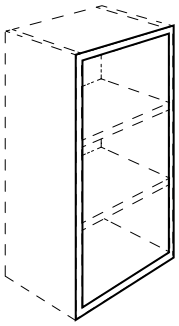

CT-EDGEBAND	24	30	21	26	27	N/A	N/A

* Matching edgeband is a 10% upcharge of cabinet price
** Factory Installed for Alvic orders

Integrated Finished End

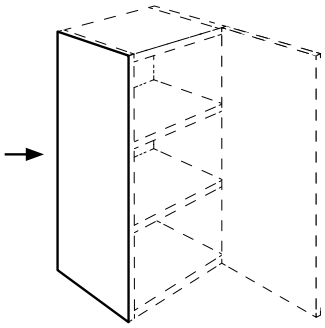

BFP*	276	349**	249	299	314	N/A	N/A
VFP*	250	315**	225	270	284	N/A	N/A
WFP12*	79	99**	71	85	89	N/A	N/A
WFP15*	79	99**	71	85	89	N/A	N/A
WFP18*	79	99**	71	85	89	N/A	N/A
WFP24*	105	133**	95	114	120	N/A	N/A
WFP30*	132	167**	119	143	150	N/A	N/A
WFP36*	158	199**	142	170	179	N/A	N/A
WFP42*	172	217**	155	186	195	N/A	N/A
TFP84*	656	827**	591	709	745	N/A	N/A
TFP90*	708	893**	638	766	804	N/A	N/A
TFP96*	748	944**	674	809	849	N/A	N/A

• Factory applied for Broadway, Milano, Versailles & Highland
**Price listed is for one finished side; for double sided finished side, multiply price by two

Touch Up Kit

Item Number	E	F	G	Plus Program H	I	Alvic J	K
TUP	100	100	100	100	100	N/A	N/A
TUP-PINT	N/A	N/A	132	159	167	N/A	N/A

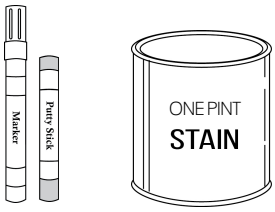

TUP TUP-PINT

Reeded Door

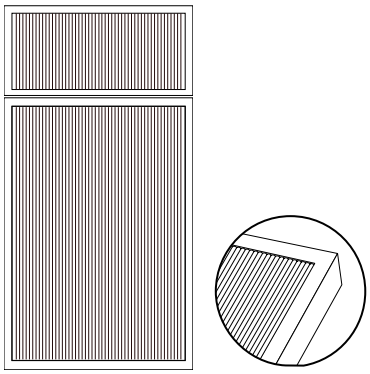

CT-CAB-DR-INS-REED	Cabinet Door Only	60%
CT-CAB-DF-INS-REED	Cabinet Drawer Front Only	15%
CT-CAB-INS-REED	Full Cabinet	60%
CT-DR-INS-REED	Custom Door	100%
CT-DF-INS-REED	Drawer Front Only	100%
CT-DR-DF-INS-REED	Door & Drawer Front Only	100%

• Only available on Versailles
* Percent upcharge of cabinet price

				Plus Program		Alvic	
Item Number	E	F	G	H	I	J	K

Custom Cabinet



CAB-CUS-BASE	*	*	*	*	*	*	*
CAB-CUS-WALL	*	*	*	*	*	*	*
CAB-CUS-TALL	*	*	*	*	*	*	*

***** Please call for pricing
• Customer must provide drawings & dimensions (Width x Height) for custom price quote and lead time
• Can not be combined with existing quote
• Custom Decorative Panels will have an extended lead time
• Grain is always vertical

** Cabinets are made custom, please provide accurate drawings with your order

Custom Hood

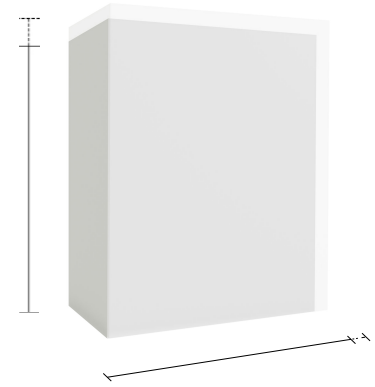

CAB-CUS-HOOD	*	*	*	*	*	*	*

***** Please call for pricing
• Customer must provide drawings & dimensions (Width x Height) for custom price quote and lead time
• Can not be combined with existing quote
• Custom Decorative Panels will have an extended lead time
• Grain is always vertical
• Does not have metal liner

** Hoods are made custom, please provide accurate drawings with your order

Custom Door / Panel



DR-CUS (Door Profile)	35	35	**35**	35	35	35	35
PL-CUS (Panel - ¾")*	35	35	35	35	35	35	35

*PL-CUS does not have a profile
• Net Price
• Price per square foot
• Customer must provide drawings & dimensions (Width x Height) for custom price quote and lead time
• Can not be combined with existing quote
• Custom Decorative Panels will have an extended lead time
• Grain is always vertical

** Doors are made custom, please provide accurate drawings with your order

	Panel	Door
Minimum	6" x 6"	6" x 6"
Maximum	48" x 96"	48" x 96"

Modifications & Upgrades



Wall Cabinet

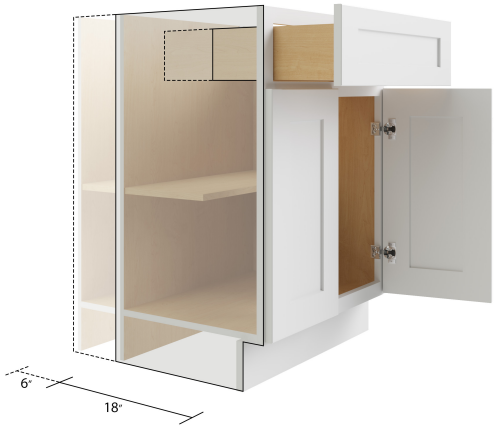

Base Cabinet

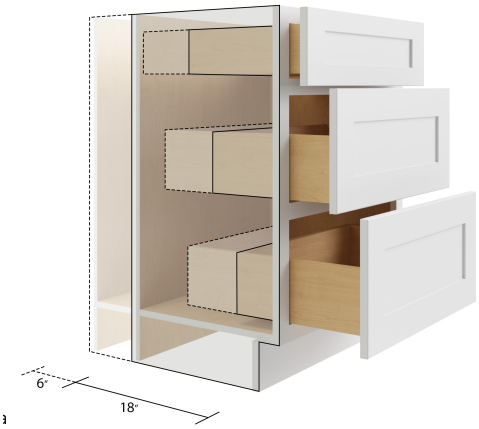

Drawer Base Cabinet
***Dovetail not in back**



Tall Cabinet

Cut Down Depth	Description	List Price
CT-CUT-DEEP-B *	Base cabinet, cut down depth	400
CT-CUT-DEEP-DB*	Drawer base cabinet, cut down depth	500
CT-CUT-DEEP-T*	Tall cabinet, cut down depth	500
CT-CUT-DEEP-W**	Wall cabinet, cut down depth	400
CT-CUT-WIDTH-B	Base cabinet, cut down width	672
CT-CUT-WIDTH-DB	Drawer Base cabinet, cut down width	906
CT-CUT-WIDTH-T	Tall cabinet, cut down width	906
CT-CUT-WIDTH-W	Wall cabinet, cut down width	672
CT-CUT-HEIGHT-W	Cut down height (only available in Alvic)	906

*Can be cut down to 9", 12", 15", 18" & 21" | **Can be cut down to 6", 9" & 11"
*All 9" Base Cabinets will have a dummy drawer front
Width Cut downs are not availabe in Highland and Versailles



Base Cabinet



Drawer Base Cabinet



Tall Cabinet



Wall Cabinet

* Must provide accurate drawing with your order

Chase Cuts	Description	List Price
CT-CHASE-B	Base cabinet, chase cut	700
CT-CHASE-DB	Drawer base cabinet, chase cut	900
CT-CHASE-T	Tall cabinet, chase cut	900
CT-CHASE-W	Wall cabinet, chase cut	600

•Non-stock cabinets, parts including doors and drawers, custom modifications, wood hoods and countertops (post form and self-edge) are not returnable.
•Must provide accurate drawings with your order

Door cut for glass



Item	Description	List Price
CT-DCG	Door cut for glass	205
CT-DCG-GLI	Door cut and insert glass	381
CT-DCG-GLI-F	Door cut and insert frosted glass	381

*Per door cost shown above

Glass Shelves



PRT-GLS-SHELF-12	(3) Glass Shelves	259
PRT-GLS-SHELF-15	(3) Glass Shelves	261
PRT-GLS-SHELF-18	(3) Glass Shelves	273
PRT-GLS-SHELF-24	(3) Glass Shelves	317
PRT-GLS-SHELF-30	(3) Glass Shelves	349
PRT-GLS-SHELF-36	(3) Glass Shelves	421

•Shelves are 3/8" thick

Extend Wall Cabinet Depth



CT-EXD-W	Extended depth wall	806

• Can only be extended to 15", 18", 21" & 24"

Finished Interior



Item	Description	List Price
CT-FINISH-B	Finished Interior - Base Cabinet	450
CT-FINISH-W	Finished Interior - Wall Cabinet	450
CT-FINISH-T	Finished Interior - Tall Cabinet	800

• Drawers will not be finished

Remove bottom from cabinet



Item	Description	List Price
CT-CUT-FLOOR	Remove bottom of cabinet	600

Faux Finger Pull



Item	Description	List Price
CT-FAUX	Move bottom of cabinet up	100

• Available with a 3/4″ or 1¼″ option

Toe Kick

Item	Description	List Price
CT-TK-CUT	Base cabinet, cut off toe kick	116
CT-TK-CUT-SHP	Base cabinet, cut off toe kick and ship	200
CT-TK-FLUSH	Flush Toe Kick	600
CT-TK-REDUCE	Reduce Depth of Toe Kick	400



CT-TK-CUT-SHP



CT-TK-FLUSH



CT-TK-CUT

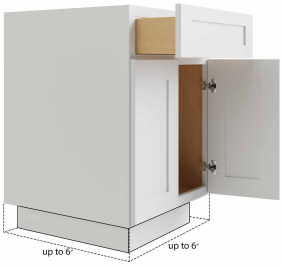

CT-TK-REDUCE

Reduced Top Drawer Depth

CT-TD-REDUCE	Reduce Depth of Top Drawer	120

- Can be cut down to 9", 12", 15", 18" & 21"



Item	Description	List Price

Base Cabinet to Sink Base



CHARGE-SINK BASE	Base to Sink Base	0

- Only available on B12, B15 & B18

Full Height Sink Base



CHARGE-SINK BASE	Make Sink Base Full Height	0

BLUM Hardware Upgrade





CT-BLUM	BLUM Hinge & Glide Upgrade	600

- BLUM upgrade is a 10% upcharge of cabinet price
- Includes both hinge and glide upgrade

Broom Divider



Item	Description	List Price
CT-BROOM-DIVIDER	Broom Divider	600

• Left or right

Rev-a-shelf Upgrades

Maple Bottom Mount Waste Pullout



Item	Fits Cabinet	Price
35 Quart		
4WCSC-1535DM-1 (1 Can)	B15	345
4WCSC-1835DM-2 (2 Cans)	B18	364.75
50 Quart		
4WCSC-1550DM-1 (1 Can)	B15-FH	347
4WCSC-1850DM-2 (2 Cans)	B18-FH	383.50
4WCSC-2150DM-2 (2 Cans)	B21-FH	408.50

- Price includes installation in cabinet
- Soft-close
- Net price





Girasolo Wood Shelves for Blind Base Cabinets



1 Shelf		
4WLS871-12-L	BLB42/45R	332.50
4WLS871-12-R	BLB42/45L	332.50
4WLS871-15-L	BLB45/48R	339.25
4WLS871-15-R	BLB45/48L	339.25
2 Shelves		
4WLS87-12-L	BLB42/45R	586.50
4WLS87-12-R	BLB42/45L	586.50
4WLS87-15-L	BLB45/48R	601.25
4WLS87-15-R	BLB45/48L	601.25

- Price includes installation in cabinet
- Soft-close
- Net price



Single Shelf



Two-tier

Elite Blind Corner Optimizer



Item	Fits Cabinet	Price
Wire Bottom		
5PSP-15SC-CR-6	BLB45/48	604.75
Solid Bottom		
53PSPE-15SC-GR	BLB45/48	842.75
53PSPE-15SC-MP	BLB45/48	842.75

- Price includes installation in cabinet
- Soft-close
- Net price



Wire Bottom

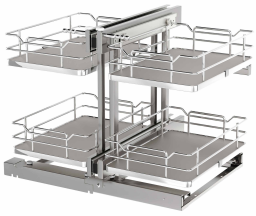

Solid Bottom (Metal)



Solid Bottom (Maple)

Heavy Duty Mixer Lift



ML-WNHDSOG-18FL	B18-FH	541

- Price includes installation in cabinet
- Net price



Base Cabinet Pullout w/ Utensil Bins



Item	Fits Cabinet	Price
448UT-BCSC-6C	B9-FH	382
448UT-BCSC-9C	B12-FH	439.50

- Price includes installation in cabinet
- BLUM, soft-close glides
- Net price



BCSC-11C

BLUM® Soft-Close Base Cabinet Pullout



448-BCSC-6C	B9-FH	291.75
448-BCSC-9C	B12-FH	354.25

- Price includes installation in cabinet
- Net price



Base Cabinet Pullout w/ Knife Block



Item	Fits Cabinet	Price
448KB-BCSC-6C	B9-FH	490
448KB-BCSC-9C	B12-FH	564.25

- Price includes installation in cabinet
- BLUM, soft-close glides
- Net price





BCSC-11C

Paper Towel Pullout



Item	Fits Cabinet	Price
448PTH-BCSC-6C	B9-FH	313.75
448PTH-BCSC-8C	B12-FH	362.25

- Price includes installation in cabinet
- Soft-close glides
- Net price



Base Cabinet Pullout w/ Tray Divider/Foil Wrap Holder



Item	Fits Cabinet	Price
447-BCSC-6C-L	B9-FH	319.75
447-BCSC-6C-R	B9-FH	319.75
447-BCSC-9C-L	B12-FH	373.25
447-BCSC-9C-R	B12-FH	373.25

- Price includes installation in cabinet
- Soft-close glides
- Net price



Drawer Peg Systems



4DPS-2421	DB30	109.50
4DPS-3021	DB36	130.35

- Price includes installation in cabinet
- Installed in bottom drawer
- Net price

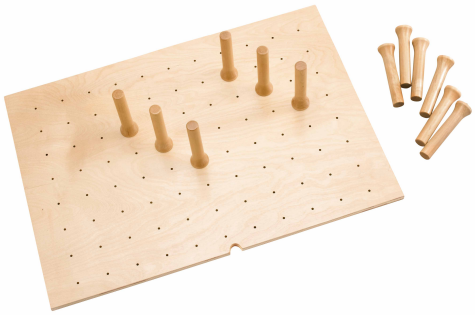

Adjustable Deep Drawer Divider System



Item	Fits Cabinet	Price
4ADI-36-1	DB30, DB33, DB36	177.25

- Price includes installation in cabinet
- Installed in bottom drawer
- Net price





Wooden Cutlery Tray Replacement



4WTCD-343HFLSC-1	B15	214.75
4WTCD-419HFLSC-2	B18	257.25
4WTCD-496HFLSC-3	B21	288.50

- Price includes installation in cabinet
- BLUM, soft-close glides
- Net price



4WTCD-15HSC-1

Item	Fits Cabinet	Price

Charging Drawer Replacement



4WCDB-18FLSC-1	B18	435.50

- Price includes installation in cabinet
- Net price



Wood Double Knife Block Insert



4DWKB-1	B24	127.25

- Price includes installation in cabinet
- Installed in top drawer
- Can be used for:
- Net price

Base Cabinets:
B12, B15, B18, B21, B24

Drawer Base Cabinets:
DB12, DB15, DB18, DB21, DB24



Wood Spice Drawer Insert



Item	Fits Cabinet	Price
4SDI-18-1	B21	78.75
4SDI-24-1	B27	106.75
4SDI-36-1	DB33	150

- Price includes installation in cabinet
- Installed in top drawer
- Can be used for:
- Net price

Base Cabinets:
B12, B15, B18, B21, B24

Drawer Base Cabinets:
DB12, DB15, DB18, DB21, DB24,DB30, DB33, B30-SDF



Wood Utensil Tray Insert



Item	Fits Cabinet	Price
4WUT-1	B21	68.75
4WUT-3	B27	88.75
4WUT-36-1	DB36	165.25
4WUTKB-36-1	DB36	224.50
4WUTCT-36-1	DB36	170

- Price includes installation in cabinet
- Net price



4WUT-1
B15, B18, B21, DB15, DB18



4WUT-3
B21, B24,B27, DB21, DB24



4WUT-36-1
DB30, DB33



4WUTKB-36-1
DB30, DB33



4WUTCT-36-1
B30, BDB30, DB33

Marble & Granite Countertops

Cultured Marble Top

MT

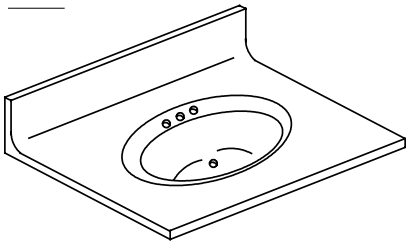

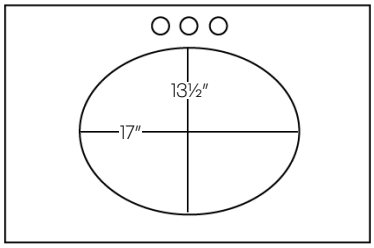

MTS

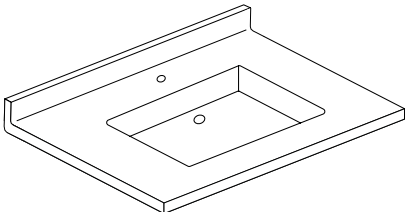

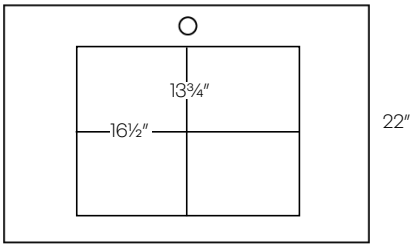

	White
MT2-1917*	162
MT2-2122	244
MT2-2519*	212
MT2-2522*	307
MT2-2822*	318
MT2-3119*	270
MT2-3122*	329
MT2-3422*	376
MT2-3722*	422
MT2-4322*	520
MT2-4922*	564
MTS2-2522	378
MTS2-2822	421
MTS2-3122	462
MTS2-3422	491
MTS2-3722	520
MTS2-4322	589
MTS2-4922	693
MTS2-6122	1023
MTS2-6122-DB	1115

***Sold only in the Northeast**
• Single bowl

• Side Spalsh not available
* Center bowl - 4″ spread

Granite Top

Includes:
- White porcelain undermount bowl (installed)
- Loose 4″ backsplash

* Center bowl - 4″ spread
** Center bowl - 8″ spread
*** Double bowl - 8″ spread

	Tiger Skin (GTS)	Cara White (GCW)	Cara White (GCWS)	Gazian White (GGW)
2522-S4*	549	823	989	744
3122-S4*	624	968	1164	818
3722-S8**	696	1097	1315	889
4322-S8**	770	1217	1460	965
4922-S8**	860	1392	1670	1042
6122-S8**	1003	1641	2194	1569
6122-D8***	1181	1830	1968	1316
SDSP-22 (side splash)	47	98	89	72
6X6-SP (sample)	14	14	15	15

***Sold only in the Northeast**
- GCWS is square
- CGT6122-S8 will not fit on the Vanguard Vanity Collection

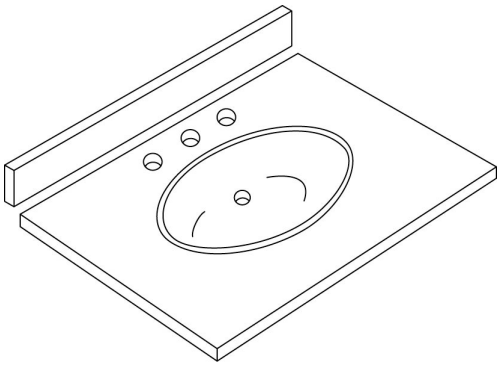

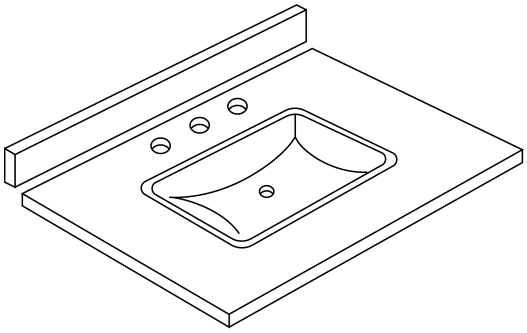

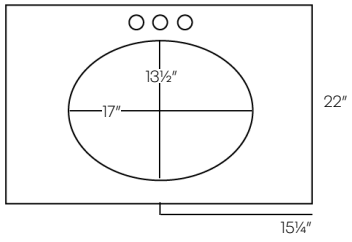

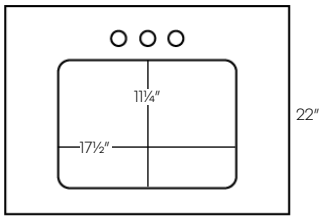

- 20% upcharge
- Only Available in CW and GGW

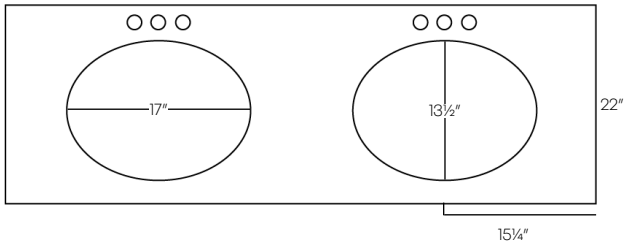

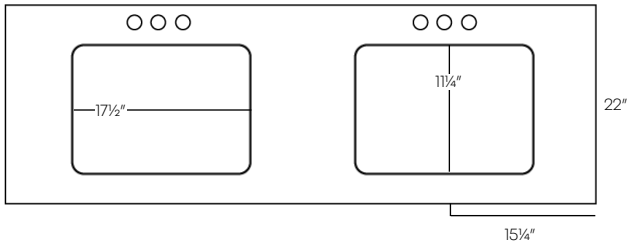

Specifications & Pricing

Vanguard Collection

Vanguard Vanities

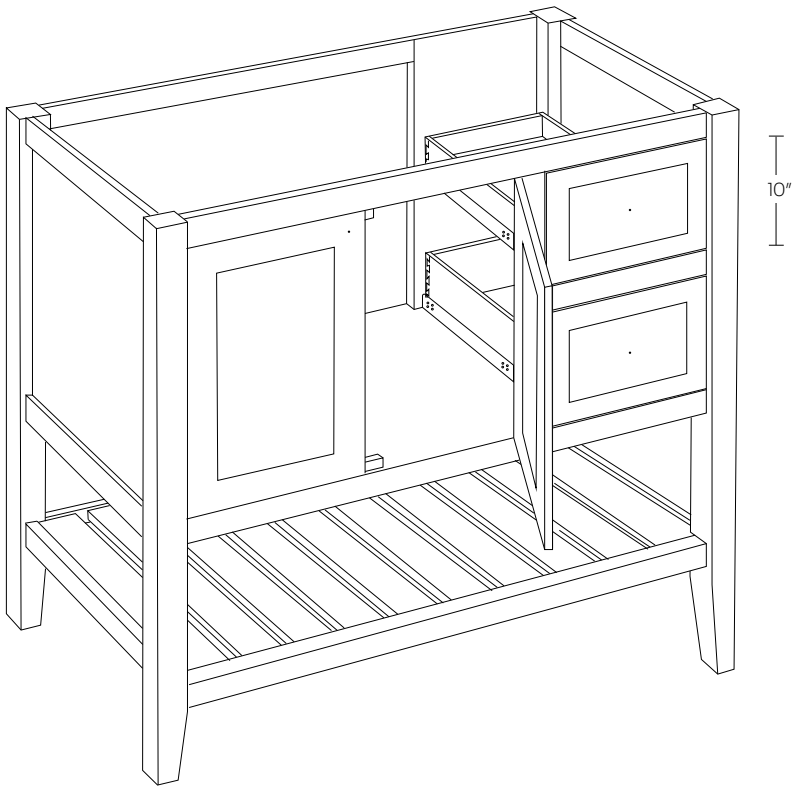

Interior — Finished with the same finish as the outside

Drawers — 5/8 ″ solid wood Dovetail sides 3/8″ thick bottom

Hinges — Heavy duty steel concealed adjustable soft close hinge.

Glides — High quality soft-close under-mount glides.

*Open back behind all doors

**One pre-drilled hole for handles

24″/30″ Vanities have 4″ spread on vanity top

36″ and higher Vanities have 8″ spread

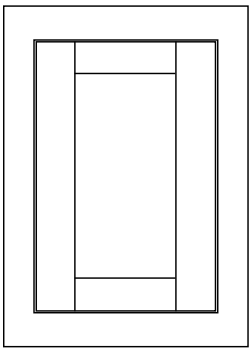

Finish	Price Code	Species
VG10 - White (paint)	**V**	**Solid Wood**

Item Number	V

Bottom Drawer Vanity

VBD2421	838

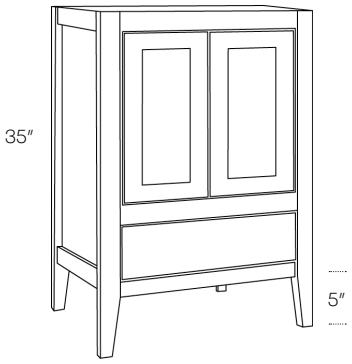

- Use tops pg. 298
- Open back
- Drawers are 3″ high inside

Double Bottom Drawer Vanity

VBD4221	1442

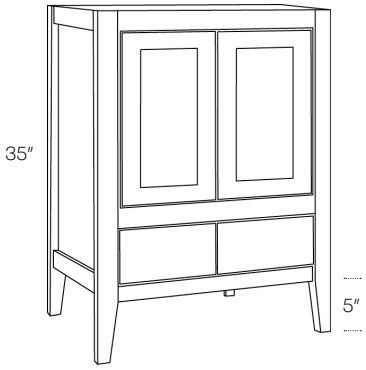

- Use tops pg. 298
- Open back
- Drawers are 3″ high inside

Open Bottom Vanity

VOB3621	983

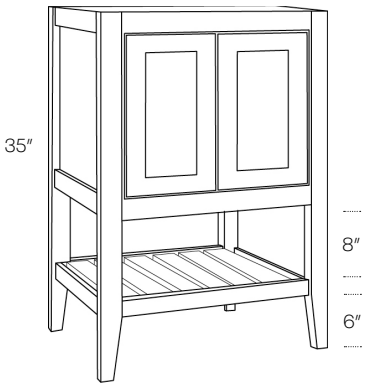

- Use tops pg. 298
- Open back

Item Number	V

Double Drawers Vanity

VDD3021	973

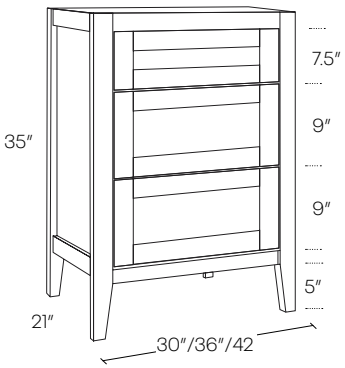

- Use tops pg. 298
- Open back
- Drawers cut for plumbing

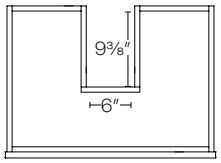

Open Bottom Right Drawers Vanity

VOB4221-DR	1374

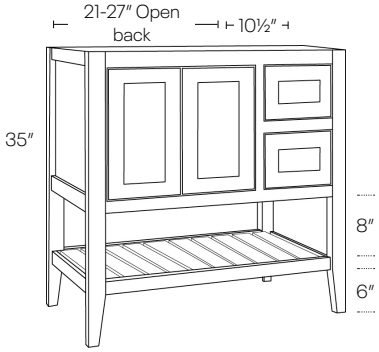

- Use tops pg. 298
- Top drawer is 1⅜″ high inside
- Bottom drawer is 3″ high inside

Open Bottom Left Drawers Vanity

VOB3621-DL	1251
VOB4221-DL	1374

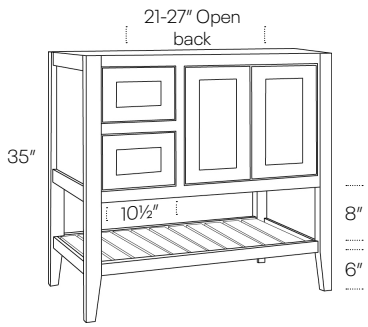

- Use tops pg. 298
- Top drawer is 1⅜″ high inside
- Bottom drawer is 3″ high inside

Item Number	V

Open Bottom Double Drawers Vanity

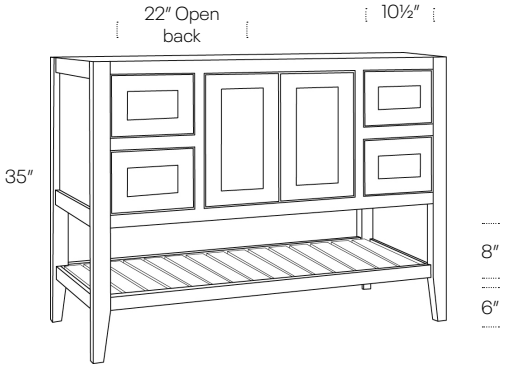

VOB4821-DD	1821

• Use tops pg. 298
• Top & bottom drawers are 3″ high inside

Mirror

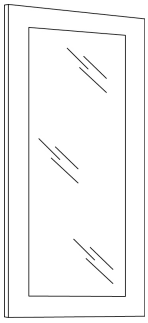

MR1830	432
MR3030	586
MR3630	647

Cabinet Care Information

Finish Awareness Statement

Thank you for choosing a stained finish product from CNC Cabinetry. When purchasing cabinetry, we would like to ensure our customers are properly educated on the characteristics of the wood used and the finished wood they are purchasing. Please review the following "Finish Awareness Statement". All of CNC's finishes are applied in the same manner and with the same quality standards. There are some unique characteristics with stained finishes across all wood species, and it is important to understand that these characteristics are not considered quality defects.

1. Wood in its natural state expands and contracts. Because of this natural movement, you may find evidence of slight cracks in joint lines on doors and face frames. Center panels will shrink exposing minor unfinished areas of wood. These slight cracks are normal and not considered quality defects. Proper humidification should be maintained during storage and after installation.

2. Every tree grows differently giving each piece of wood its own unique characteristics. By the very nature of wood, grain patterns and other wood characteristics including mineral streaks, knots, and other variations are considered normal. Because of this, stain will appear differently across the same cabinet. This is the natural beauty of the wood.

3. End grains on door edges and panel profiles may exhibit open grain or voids in wood appearing as "Rough Spots" in the wood. Stains often highlight indentions into the wood. These imperfections are normal and are not considered quality defects.

4. Light-colored wood may heighten light-and-dark effects, and cause blotchiness when medium or dark stains are applied. These are natural occurrences and are within CNC's strict standards of wood-finishing.

These imperfections are normal and will not be considered as reasons for replacement. We, the manufacturer, nor your authorized dealer will replace products or issue credit based on any of the above reasons.

Treat your Cabinets with Care:

- Use a soft cotton cloth.
- Do not use abrasive materials (including paper towels).
- Only use soap and warm water.
- Do not spray directly onto the cabinets.
- Do not use any chemicals.
  (Note, when using a spray for other items placed near your cabinetry, be careful not to overspray on your cabinets)
- Wipe spills promptly and do not leave wet items against the wood.
- Clean glass doors with a glass cleaner.
  (Be careful not to overspray on the wood)
- You can repair small nicks and scratches with our touch up kits.
- Waxing and polishing is not recommended as this can create a film or wax build up on your cabinets and affect the finish.
- You can dust your cabinets with a lightly damp cloth.
  (Follow the grain of the wood wiping across can cause scratches)

Humidification effects on door with a Miter Joint

High Humidity

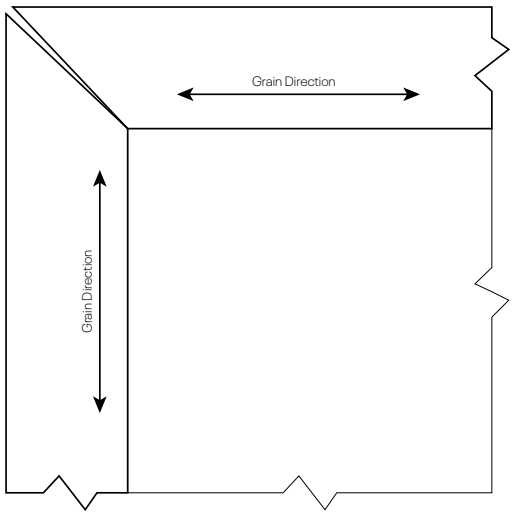

When wood swells, miter joints open as shown above

Low Humidity

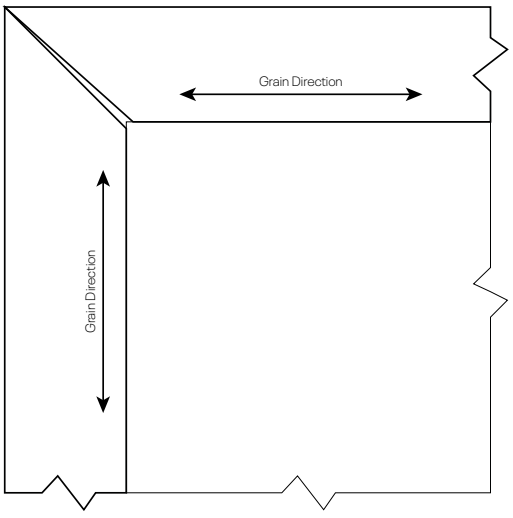

When wood shrinks, miter joints open as shown above

* Humidification is normal and is not considered a need for replacement.

Limited Five-Year Warranty

CNC Cabinetry Inc. ("CNC") provides the following limited 5 year warranty to the original Residential Purchaser of all Bedford cabinetry and vanities manufactured by CNC. This Limited 5 Year Warranty ("Warranty") is only applicable to cabinets and vanities sold to the original Residential purchaser (as defined below) and used in the applications described below within the United States. Except as allowed by applicable law, you may not assign or transfer this Warranty.

Under this Warranty, an original Residential purchaser is defined as an individual who purchases and installs the cabinets and vanities in a dwelling that is owned and used by that person as a primary or secondary home. A primary or secondary home does not include rental property. This Warranty does not apply to landlords, leasing companies or other commercial purchasers. Original residential purchaser shall include any business or person such as a builder, contractor or developer that purchases and install CNC cabinets and vanities in a newly constructed or renovated dwelling that will be used by the initial owner/purchaser of that dwelling as a primary or secondary home.

Subject to the limitations and exclusions set forth, CNC warrants to the original Residential purchaser that the cabinets and vanities will be free from defects in material and workmanship, damage that occurs during normal wear and tear, or damage due to exposure to moisture or extreme temperatures are not covered under the warranty.

The Warranty period for the cabinets and vanities begin on the date the cabinet and vanity were purchased, whether purchased by you or by a third party on your behalf. Your warranty is only valid if you used the dwelling as your primary or secondary home and does not extend to future owners if the property is sold.

This Warranty does not apply to cabinets or vanities: 1. Installed outdoors; 2. Misused, abused, or unauthorized alterations; 3. Improperly stored or placed in humid environment or subjected to improper temperatures; 4. Damaged due to flood, fire or other natural disasters; 5. Exhibiting normal wear and tear; 6. Which have been improperly installed, maintained or cleaned.

In the event of a defect in the workmanship or materials occurring during the warranty period, CNC will at its option, repair or replace any defective cabinet or vanity or component provided, if it is commercially feasible. If it is not commercially feasible, CNC reserves the right to provide a credit towards a similar type of product sold by CNC. This is your sole and exclusive remedy for any defects.

This Warranty is limited to the replacement of defective parts only and does not include service, labor or transportation charges related to the removal or installation of the defective or replacement parts. This Warranty does not apply to any products used in conjunction with the cabinetry, or vanity, such as countertops, appliances, plumbing fixtures, decorative hardware, lighting. Repair or replacement remedies offered under this Warranty are subject to the current product offerings of styles and construction of CNC at that time. If a warranty claim is filed after a product has been discontinued or obsolete, CNC reserves the right at its sole option, to replace that part with one of the same or similar style based on availability and cannot guarantee an exact match.

The remedies described above are the sole and exclusive remedies and CNC's entire liability for any breach of this Warranty. Total liability shall under no circumstances exceed the actual amount paid for the defective cabinet or vanity. CNC shall not be responsible for any consequential, incidental, special or punitive damages. This Warranty gives you specific legal rights and you may also have other rights which vary from state to state. For replacements under CNC's limited 5 year warranty, contact your authorized CNC dealer who will arrange for inspection of the cabinet. A dated sales receipt as proof of purchase is required to obtain benefits from this warranty, if you have difficulty reaching your dealer, you may reach out to CNC Cabinetry directly.

Limited Lifetime Warranty:

CNC Cabinetry Inc. ("CNC") provides the following limited lifetime warranty to the original Residential Purchaser of all Luxor, Concord and Classic cabinetry and vanities manufactured by CNC. This Limited Lifetime Warranty ("Warranty") is only applicable to cabinets and vanities sold to the original Residential purchaser (as defined below) and used in the applications described below within the United States. Except as allowed by applicable law, you may not assign or transfer this Warranty.

Under this Warranty, an original Residential purchaser is defined as an individual who purchases and installs the cabinets and vanities in a dwelling that is owned and used by that person as a primary or secondary home. A primary or secondary home does not include rental property. This Warranty does not apply to landlords, leasing companies or other commercial purchasers. Original residential purchaser shall include any business or person such as a builder, contractor or developer that purchases and install CNC cabinets and vanities in a newly constructed or renovated dwelling that will be used by the initial owner/purchaser of that dwelling as a primary or secondary home.

Subject to the limitations and exclusions set forth, CNC warrants to the original Residential purchaser that the cabinets and vanities will be free from defects in material and workmanship, damage that occurs during normal wear and tear, or damage due to exposure to moisture or extreme temperatures are not covered under the warranty.

The Warranty period for the cabinets and vanities begin on the date the cabinet and vanity were purchased, whether purchased by you or by a third party on your behalf. Your warranty is only valid if you used the dwelling as your primary or secondary home and does not extend to future owners if the property is sold.

This Warranty does not apply to cabinets or vanities: 1. Installed outdoors; 2. Misused, abused, or unauthorized alterations; 3. Improperly stored or placed in humid environment or subjected to improper temperatures; 4. Damaged due to flood, fire or other natural disasters; 5. Exhibiting normal wear and tear; 6. Which have been improperly installed, maintained or cleaned.

In the event of a defect in the workmanship or materials occurring during the warranty period, CNC will at its option, repair or replace any defective cabinet or vanity or component provided, if it is commercially feasible. If it is not commercially feasible, CNC reserves the right to provide a credit towards a similar type of product sold by CNC. This is your sole and exclusive remedy for any defects.

This Warranty is limited to the replacement of defective parts only and does not include service, labor or transportation charges related to the removal or installation of the defective or replacement parts. This Warranty does not apply to any products used in conjunction with the cabinetry, or vanity, such as countertops, appliances, plumbing fixtures, decorative hardware, lighting. Repair or replacement remedies offered under this Warranty are subject to the current product offerings of styles and construction of CNC at that time. If a warranty claim is filed after a product has been discontinued or obsolete, CNC reserves the right at its sole option, to replace that part with one of the same or similar style based on availability and cannot guarantee an exact match.

The remedies described above are the sole and exclusive remedies and CNC's entire liability for any breach of this Warranty. Total liability shall under no circumstances exceed the actual amount paid for the defective cabinet or vanity. CNC shall not be responsible for any consequential, incidental, special or punitive damages. This Warranty gives you specific legal rights and you may also have other rights which vary from state to state.

For replacements under CNC's limited lifetime warranty, contact your authorized CNC dealer who will arrange for inspection of the cabinet. A dated sales receipt as proof of purchase is required to obtain benefits from this warranty, if you have difficulty reaching your dealer, you may reach out to CNC Cabinetry directly.

Member NKBA

www.cnccabinetry.com

Headquarters

101 Kentile Rd
South Plainfield, NJ 07080

South East

4501 Homerun Blvd. # 300
Davenport, FL 33837

Mid Atlantic

2000 Nazareth Church Rd
Spartanburg, SC 29301

West Coast

2770 North Lamb Blvd
Las Vegas, NV 89115

South West

2300 East Bardin Rd
Arlington, TX 76018

cnc cabinetry®