cnc cabinetry®

2025

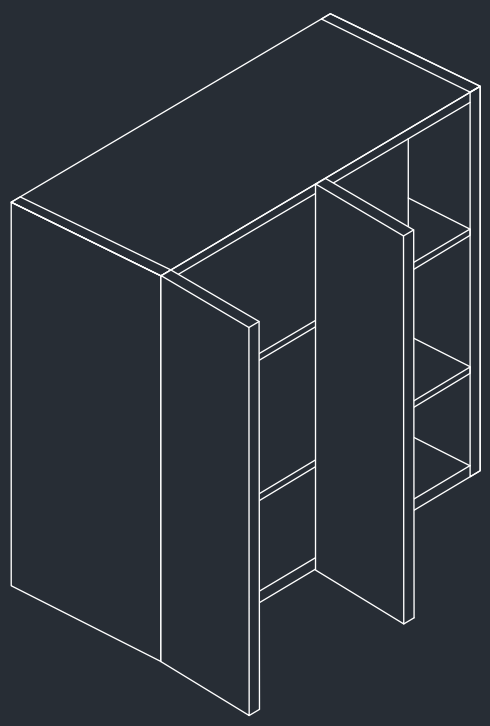

Product Spec Book

America's Best Value In Cabinetry®

Dear CNC Value Partner,

CNC was founded on the idea of making kitchen cabinets more accessible to all, by offering the ultimate value design, quality and price.

For over three decades now, we at CNC have been providing kitchen and bath dealers and the customers they serve throughout the United States with the ultimate value in kitchen cabinets countertops, and bathroom vanities. Rather than tossing about meaningless boardroom phrases, we set out to define just what exactly value means.

For us, value means ordering high-quality products at affordable prices. Value means being able to offer a vast, ever-expanding selection of progressively designed door styles. Value means providing lightning-quick turnaround times. Value means giving someone the ability to talk to a real person who understands your needs.

Our motto, "America's Best Value in Cabinetry", reflects our commitment to you, our customer. We provide this value nationally through our many locations across the country. This strategy not only ensures efficiency in delivery but also emphasizes our nationwide accessibility.

This is the core of CNC - a company built on providing our customers with the ultimate value in design, quality, and service. Our cabinets create a comfortable and personalized living space, transforming the house into a home. Please peruse the accompanying material to get to know us, and how we can service you.

Thank you for choosing CNC Cabinetry.

Nathan Indig

Nathan Indig

CEO, CNC Cabinetry

New Additions

Price Codes:

***Please note following updated price codes**

Luxor	Country	Concord	Classic	Alvic	Vanguard
L/Z	R	A/B/C/D/M/N/O/P	E/F/G/H/I	J/K	V

New Door Styles

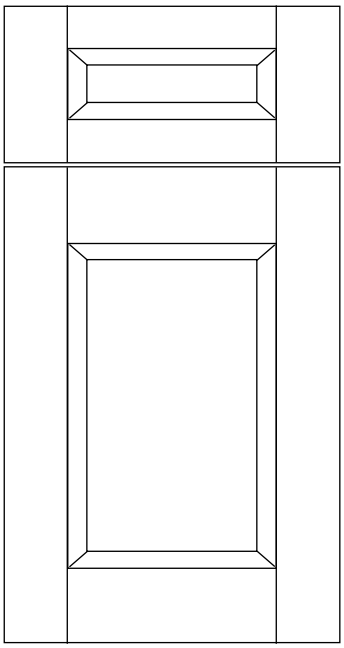

Sydney

Concord Collection

Door Style: French Miter

Overlay: Full Overlay

Price Code: C,O,P

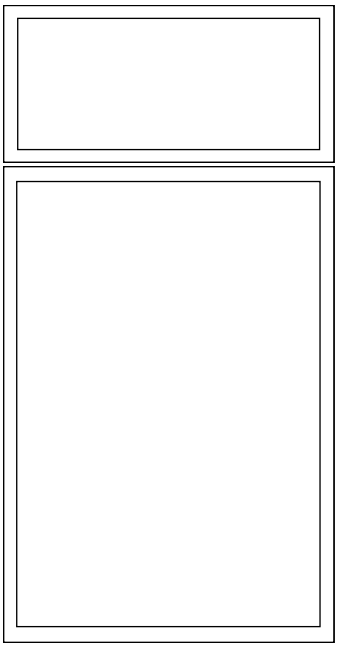

Newport

Concord Collection

Door Style: Slim Shaker

Overlay: Full Overlay

Price Code: A,D,M

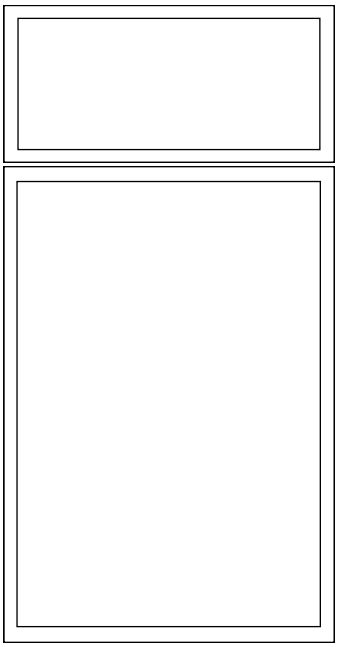

Highland

Classic Collection

Door Style: Reverse Slim Shaker

Overlay: Frameless

Price Code: G,H

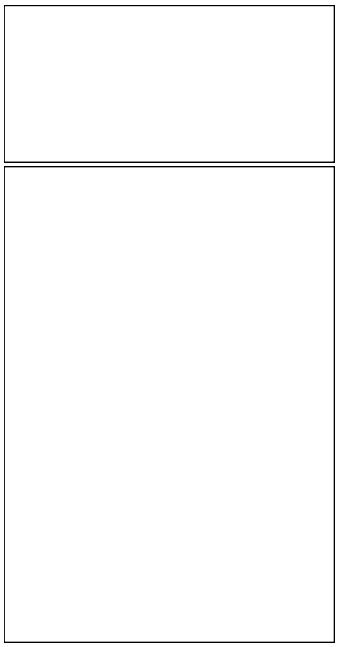

Broadway

Classic Collection

Door Style: Flat Panel

Overlay: Frameless

Price Code: E

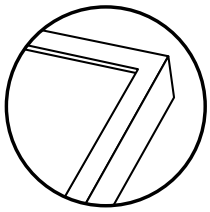

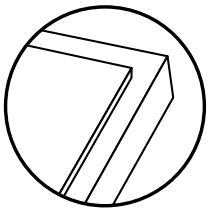

New Finishes:

Plus Program

Color Name	Finish	Collection(s)
101 - Sleek White*	Paint **(Behr: OR-W15)**	Concord, Classic
102 - Linen*	Paint **(PPG1085-2)**	Concord, Classic
103 - Sahara*	Paint **(PPG1085-4)**	Concord, Classic
104 - Mountain Stream*	Paint **(PPG1149-4)**	Concord, Classic
105 - Adirondack Blue*	Paint **(Behr: N-480)**	Concord, Classic
106 - Sage*	Paint **(PPG1033-5)**	Concord, Classic
107 - Evergreen*	Paint **(PPG1124-6)**	Concord, Classic
108 - Rumors*	Paint **(Behr: MQ1-15)**	Concord, Classic
109- Cracked Pepper*	Paint **(PPU18-01)**	Concord, Classic
110 - Jet Black*	Paint **(BLACK)**	Concord, Classic
200 - Ale	Stain	Concord (Sydney, Newport), Classic (Versailles)
201 - Bourbon	Stain	Concord (Sydney, Newport), Classic (Versailles)

***Finishes not available in the Park Ave, Milano or Broadway doors**

Classic Collection

Color Name	Finish	Collection(s)
600 - Cotton	Matte	Classic (Broadway)
601 - Silk	Matte	Classic (Broadway)
602 - Nimbus	Matte	Classic (Broadway)
603 - Cobalt	Matte	Classic (Broadway)
604 - Graphite	Matte	Classic (Broadway)
650 - Almond	Textured	Classic (Broadway)
651 - Chestnut	Textured	Classic (Broadway)
652 - Walnut	Textured	Classic (Broadway)
653 - Coastal	Textured	Classic (Broadway)
654 - Driftwood	Textured	Classic (Broadway)
655 - Beach	Textured	Classic (Broadway)
656 - Silver Birch	Textured	Classic (Broadway)
400 - Polar White **(previously M40)**	Matte	Classic (Milano)
401 - Fossil Grey **(previously M41)**	Matte	Classic (Milano)
402 - Sand **(previously M42)**	Matte	Classic (Milano)
403 - Seaside **(previously M43)**	Matte	Classic (Milano)
404 - Pine	Matte	Classic (Milano)
405 - Snow	Matte	Classic (Milano)
406 - Sunset	Matte	Classic (Milano)
407 - Obsidian	Matte	Classic (Milano)
450 - Mirage	Reeded	Classic (Milano)
451 - Dune	Textured	Classic (Milano)
452 - Autumn	Textured	Classic (Milano)
453 - Ash	Textured	Classic (Milano)

New Items

Item	SKU	Page:	Collection(s)
Microwave Base Cabinet	MCB24	52, 134	Luxor, Concord
Microwave Base Cabinet	MCB27	52, 134	Luxor, Concord
Microwave Base Cabinet Trim Kit	MCB24-TRM	52, 134	Luxor, Concord
Microwave Base Cabinet Trim Kit	MCB27-TRM	52, 134	Luxor, Concord
Blind Wall Cabinet	BLW30/3330	40, 114, 176	Luxor, Concord, Classic
Blind Wall Cabinet	BLW30/3336	41, 115, 178	Luxor, Concord, Classic
Blind Wall Cabinet	BLW30/3342	43, 117, 178	Luxor, Concord, Classic
Blind Wall Cabinet	BLW42/4530	40, 114, 176	Luxor, Concord, Classic
Blind Wall Cabinet	BLW42/4536	41, 115, 178	Luxor, Concord, Classic
Blind Wall Cabinet	BLW42/4542	43, 117, 178	Luxor, Concord, Classic
Vanity Base Cabinet	VB12	144, 207	Concord, Classic
Vanity Base Cabinet	VB15	144, 207	Concord, Classic
Vanity Base Cabinet	VB18	144, 207	Concord, Classic
Aluminum Framed Glass Door	ACG-1530	182	Classic
Aluminum Framed Glass Door	ACG-1536	182	Classic
Aluminum Framed Glass Door	ACG-1542	182	Classic
Aluminum Framed Glass Door	ACG-1830	182	Classic
Aluminum Framed Glass Door	ACG-1836	182	Classic
Aluminum Framed Glass Door	ACG-1842	182	Classic
Removable Sink Insert	SB30-HR-INS	55	Luxor
Royal Crown Molding Round	RCRMR	70, 149, 215	Luxor, Concord, Classic
2 Drawer Base Cabinet	DB33-2	189	Classic
Vanity Drawer Base	VDB21	145, 209	Concord, Classic
Vanity Drawer Base	VDB24	145, 209	Concord, Classic
Aerosol Container	CHW-UNI-AERSOL-SPRAY	73, 156, 218	Luxor, Concord, Classic
Maple Cabinet Box	CLM	165	Classic
Wall Cabinet	3912	36, 110, 172	Luxor, Concord, Classic
Wall Cabinet	3912X24	36, 110, 172	Luxor, Concord, Classic
Wall Cabinet	3915	36, 110, 172	Luxor, Concord, Classic
Wall Cabinet	3915X24	37, 111, 173	Luxor, Concord, Classic
Wall Cabinet	3918	37, 111, 173	Luxor, Concord, Classic
Wall Cabinet	3918X24	37, 111, 174	Luxor, Concord, Classic
Wall Cabinet	3924	38, 112, 174	Luxor, Concord, Classic
Wall Cabinet	3924x24	38, 112, 175	Luxor, Concord, Classic
Lazy Susan	LS36	132, 192	Concord, Classic
Blind Base Cabinet	BLB48/51	47, 129	Luxor, Concord
Double Oven Cabinet	OVD3084	59	Luxor
Double Oven Cabinet	OVD3090	59	Luxor
Double Oven Cabinet	OVD3096	59	Luxor
Double Oven Cabinet Trim Kit	OVD30-TRM	59	Luxor
15″ Deep Wall Cabinet	3024X15	38	Luxor
End Panel	UREP25	68, 148, 211	Luxor, Concord, Classic
Easy Reach Corner Base Cabinet	ER36	51	Luxor
Batten Molding	BAT	71, 151	Luxor, Concord
1 Door Vanity Base Cabinet	V1816-HA	55	Luxor
2 Door Vanity Base Cabinet	V2418-HA	55	Luxor

New Modifications

Item	SKU	Collection(s)
Full Depth Shelf	CT-SHELF-FD	Luxor, Concord
Base Cabinet Finished Interior	CT-FINISH-B	Luxor, Concord, Classic
Wall Cabinet Finished Interior	CT-FINISH-W	Luxor, Concord, Classic
Tall Cabinet Finished Interior	CT-FINISH-T	Luxor, Concord, Classic
Recessed Toe Kick	CT-TK-REDUCE	Luxor, Concord, Classic
Flush Toe Kick	CT-TKFLUSH	Luxor, Concord, Classic
Base Cabinet to SInk Base	CHARGE-SINKBASE	Luxor, Concord, Classic
Reduced Top Drawer	CT-TD-REDUCE	Luxor, Concord, Classic
Cut Down Width	CT-WIDTHCUT	Classic, Alvic
Cut Down Height	CT-HEIGHTCUT	Alvic

Discontinuations:

Item	SKU	Collection(s)
Arched Wood Hood	WHA	Luxor, Concord
Straight Wood Hood	WHP	Concord
Mantle Hood	WACC	Concord
Mullion Doors	MD	Concord
Blind Wall Cabinet	BLW39/4230	Luxor, Concord, Classic
Blind Wall Cabinet	BLW39/4236	Luxor, Concord, Classic
Blind Wall Cabinet	BLW39/4242	Luxor, Concord, Classic
30″ High 4 Door Wall Cabinet	4830	Concord
30″ High Diagonal Corner Wall Cabinet	CW2730	Concord
36″ High Diagonal Corner Wall Cabinet	CW2736	Concord
42″ High Diagonal Corner Wall Cabinet	CW2742	Concord
Plate Rack Cabinet	PR3018	Concord
Wine Rack Cabinet	WR3018	Concord
Glass Holder	SGH30	Concord
Top of Counter Cabinet	WD1818	Concord
Elegant Dove	EB22	Concord
Wall Cabinet	3021	Luxor
Wall Cabinet	3921	Luxor
15″ Deep Wall Cabinet	3624X15	Luxor
Vanity Cabinet	V1816	Classic
Vanity Cabinet	VOB6021-DC	Vanguard
Matrix Silver	M18	Classic
Matrix Greystone	M19	Classic

Limited Lifetime Warranty:

Please see our updated Limited Lifetime Warranty located in the back of the back on page 242.

Contents

General Information

Policies & Procedures	9
Cabinet Code Key	13
Collections & Styles	17
Comparison Chart	23
Displays & Samples	27

Luxor Collection

Door Styles & Specifications	32
Wall Cabinets	36
Base Cabinets	46
ADA Base Cabinets	54
Tall Cabinets	56
Accessories	60
Vanities & Medicine Cabinets	62
Fillers, Panels & Moldings	68
Modifications & Upgrades	75

Country Collection

Door Styles & Specifications	81
Wall Cabinets	86
Base Cabinets	92
Tall Cabinets	95
Vanities & Medicine Cabinets	97
Fillers, Panels & Moldings	100

Concord Collection

Door Styles & Specifications	103
Wall Cabinets	110
Base Cabinets	121
Tall Cabinets	137
Accessories	141
Vanities & Medicine Cabinets	144
Fillers, Panels & Moldings	147
Decorative Accessories	153
Modifications & Upgrades	157

Classic Collection

Door Styles & Specifications	163
Wall Cabinets	172
Base Cabinets	183
ADA Base Cabinets	196
Tall Cabinets	200
Accessories	204
Vanities & Medicine Cabinets	207
Fillers, Panels & Moldings	210
Modifications & Upgrades	220

Additional Information

Vanguard Collection	225
Surelle Collection	229
Marble & Granite Countertop	231
Modifications & Upgrades	235
Cabinet Care	241
Limited Lifetime Warranty	244

General Information

Policies & Procedures

Design & Pricing Software

CNC Cabinetry provides a product catalog compatible with 2020 Design & ProKitchen Design Software. These are downloadable via our website at www.cnccabinetry.com. CNC Cabinetry does not take responsibility for discrepancies between design software and CNC Cabinetry pricing.

Terms & Conditions Standards

All prices and specifications are subject to change. Payments may be made by ACH, Check, Debit/Credit Card, or Account Credit. To apply for credit, visit http://cnccabinetry.com/creditapp/.

Placing Orders

Placing orders can be done through our CABNET program, using the excel order form found on our website, ProKitchen or 2020 SKU lists. Orders will not be accepted over the phone. It is the dealers responsibility to review all quotes for accuracy and confirm before any order goes into production. If you would like the order to ship complete, please note that on quote and approval. If not indicated, order will ship with the available cabinets.

Once an order is placed and sent into production, NO CHANGES can be made. For Concord and Classic only, an order may be changed up to 48 hours (2 business days). Canceled items/orders after approval, will have a 20% restocking fee (if the order has not yet been shipped). If the cabinets have been shipped or are already palletized, customer is responsible for freight costs back to CNC Cabinetry, if applicable, and a 25% restocking fee. Modified cabinets cannot be cancelled or returned. Unassembled cabinets that have been assembled by the customer cannot be returned. To cancel items from an order, please reach out to your customer service representative.

Delivery Options

- Pick-up.
- CNC truck.
- White-glove delivery available for an additional fee
- Common Carrier-Scheduled by CNC Cabinetry
    - If you have a preferred carrier please request it.
    - Please note that a per pallet fee will be applied to the order
- Common Carrier-Scheduled by Customer
    - If you need a residential lifetgate, please make note of this with your carrier
    - Please note that a per pallet fee will be applied to the order

Orders are automatically scheduled for the next available delivery day to your area unless specified otherwise.

A rescheduled delivery may result in a 20% fee.

Missed pick-up appointments after 48 hours will incur storage fees. After 30 days, orders will be returned to stock and a restocking fee of 25% will be charged.

White Glove Delivery Service

White Glove Delivery is available with CNC truck orders only. Delivery service will cost $200, which includes a job site delivery fee of $125. This fee will cover up to the first 25 cabinets. Delivery will be to the ground floor only. Orders over 25 cabinets will incur an additional fee. White Glove Delivery is also available for common carrier orders. These orders are priced per order, please contact your customer service representative for more information.

Please note: In-Home Delivery will have an extended lead time of up to 5 days.

Returns

There will be a 25% restocking fee for any returned cabinet. Shipping/Delivery charges will not be credited for any returns. It is the customer's responsibility to pay for shipping on return items. We will not accept returns on any assembled cabinets by the customer, installed cabinets, or cabinets without their original box. Non-stock cabinets, all Alvic orders, parts including doors and drawers, custom modifications, wood hoods and countertops (post form and self-edge)

Once merchandise is received and inspected at our warehouse, a credit will be issued to your account for the returned merchandise less the 25% restocking fee. Please allow CNC 7-14 business days to process your credit. CNC will not accept returns after 30 days.

Damages

If a cabinet or countertop arrives damaged, please contact customer service and a replacement order will be issued. Pictures of the damages and your CNC sales order or P.O. number must be provided. If you do not have pictures of the damages, we will send the replacement/s for the full price and credit will be applied once we receive the pictures. Do not install damaged cabinets. CNC will not credit damaged cabinets that have been installed. CNC will not credit damaged cabinets after 30 days of delivery.

Lead times

Cut-off time is 5:00pm Eastern time (M-TH) 3:00 pm Eastern time (Friday) for assembled and unassembled cabinets in order to meet standard lead times. Extended lead times will occur for orders containing 100 cabinets or more. An extended lead time will also occur for any post-form or square-edge countertops with cut outs, cut-downs, or assembled miters and for stocked countertops over 12 pieces.

Shipping

CNC offers delivery service with our own fleet of trucks that will deliver within the local New Jersey tri-state area and areas within a 3-hour driving radius of our Florida facility for a minimum charge. Local deliveries will be assessed for pricing based on gas rates. Rates will be reassessed every 90 days. Deliveries are curbside only. Jobsite deliveries are available upon request for a minimal fee. White-glove delivery service is available upon request . Please contact your Customer Service representative for pricing and details.

Outside of our flagship facility areas, we ship via Common Carrier, where the best available pallet rate will be chosen. If a customer sends their own carrier to pick-up cabinets, CNC will not be responsible for filing damage claims. Please note that a per pallet fee will be applied to the order.

Floor load truckloads will be charged 250.00 per truckload.
Refused orders or missed pick-ups will be charged a fee to reschedule the delivery or pick-up.

Limited Lifetime Warranty

Please see our updated Limited Lifetime Warranty located in the back of the back on page 244.

Cabinet Code Key

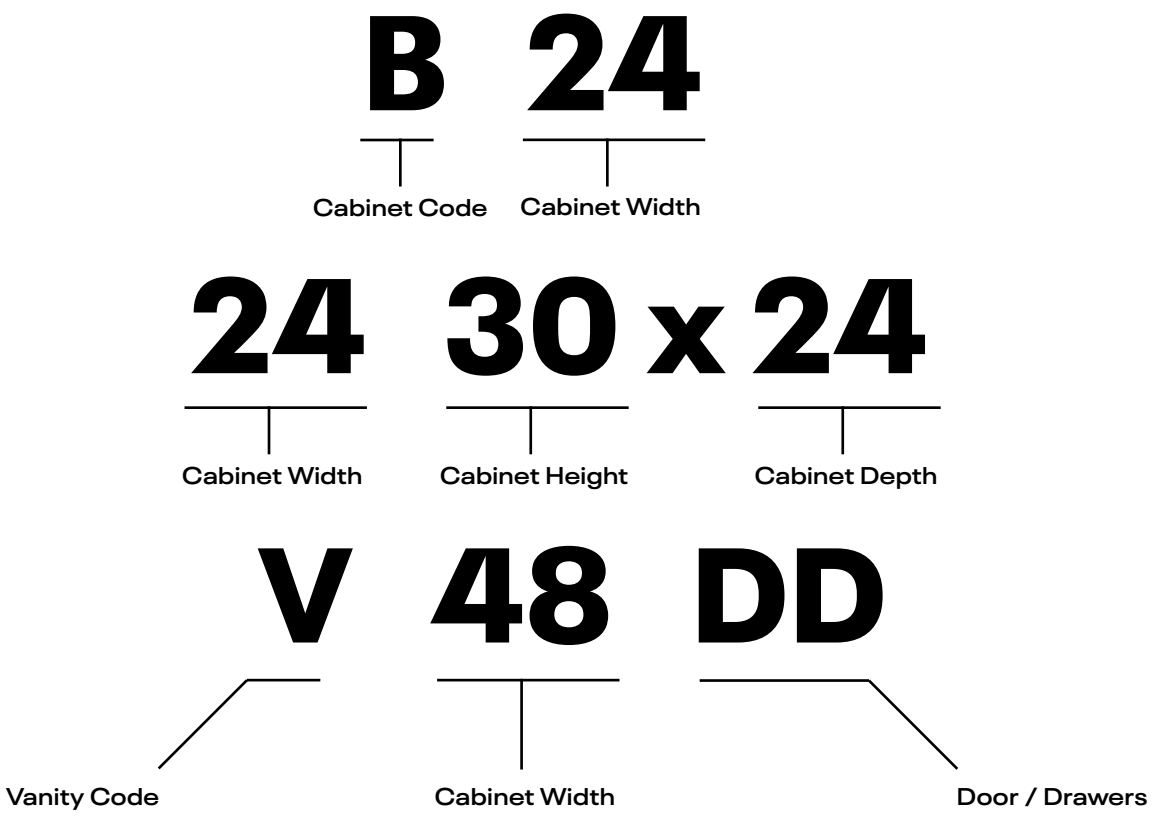

When looking at product codes it is important to note each element within the code in order to ensure you are ordering the correct cabinet piece. For example, the codes displayed above would translate to:

Base Cabinet; 24″ Wide x 34½″ High

Wall Cabinet; 24″ Wide x 30″ High x 24″Deep

Vanity Cabinet; 48″ Wide x 21″ Deep; Double Drawers

Additionally, it is important to note the following when selecting and ordering cabinets:

- Standard Wall cabinets are 12″ deep
- Standard Base cabinets are 34½″ high and 24″ deep
- Add door thickness for total cabinet depth
- Vanity Cabinets are 32½″ high for Country Collection; 34½″ high for Luxor, Concord and Classic Collection
- Standard Vanity Cabinets are 21″ deep
- Handicap Accessible/Removable cabinets are 32.5″ tall and are indicated with 'HA' or 'HR' at the end of a product code

Wall Cabinets

3030 - Wall Cabinet

CW2430 - Corner Wall Cabinet

BLW 27/3030 - Blind Wall Cabinet

WSQ2430 - Square Corner Wall Cabinet

WEC1230 - Wall End Cabinet

WSP - Wall Spice Rack

MW3030 - Microwave Cabinet

Base Cabinets

B30 - Base Cabinet

DB12 - Drawer Base Cabinet

BLB36/39 - Blind Base Cabinet

CSF/CSFFL - Diagonal Corner Sink Front/Floor

ER - Easy Reach

LS - Lazy Susan

CSB36 - Corner Sink Base

CAR33 - Lazy Susan Corner Base Cabinet

SB24 - Sink Base

SB30-FS - Farm Sink Base

BWBK15 - Waste Basket Cabinet

BEC24 - Base End Cabinet

BSP9 - Base Spice Rack

B9-HA - Base; Handicap Accessible

SB36-HR - Base; Handicap Removable

Tall Cabinets

UC2424x84 - Utility Cabinet

OV3384 - Oven Cabinet

Accessories

POS - Pullout Shelf

WCD - Wooden Cutlery Drawer

WH - Wood Hoods

F-SHELF - Floating Shelf

Vanity Cabinets

V2418 - Vanity Sink Base

V30D - 1 Door and 2 Drawer Vanity Sink Base

V482DD - 2 Door and 4 Drawer Vanity Sink Base

VDB15 - Vanity Drawer Base

VBD30 - Bottom Drawer Vanity

VDD30 - Double Drawer Vanity

VOB24 - Open Bottom Vanity

MC1830 - Medicine Cabinet

DD30 - Desk Drawer

Collections & Styles

Luxor Collection

The Luxor Collection is our partial overlay cabinet constructed from all plywood. Cabinets are equipped with ¾″ adjustable shelves and adjustable soft close hinges. All drawer boxes are made with dovetail construction and come with a slab drawer front and six way soft-close undermount glides. Five piece drawer front is available as an upgrade.

***Please note, cabinet door and box dimensions may vary by 1/8″**

Price Codes

L	Z
Luxor	Luxor 5 Panel

Door Styles

Luxor

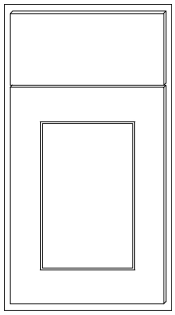

L02 - Smoky Grey
L03 - Misty Grey
L05 - Harvest
L10 - White
L11 - Espresso

A partial overlay, ½″ reveal, 2 ½″ wide shaker style door with a flat center panel, Mortise and Tenon construction, and a slab drawer front.

Luxor 5P

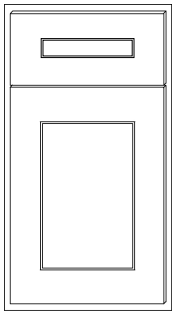

L02 - Smoky Grey
L03 - Misty Grey
L05 - Harvest
L10 - White
L11 - Espresso

Country Collection

The Country Collection is our standard overlay cabinet constructed from all plywood. The wall and base cabinets are equipped with 3/4″ plywood adjustable shelves and adjustable hinges. Drawer boxes are made with plywood and have side mount glides.

***Please note, cabinet door and box dimensions may vary by 1/8″**

Price Codes

R
Oak

Door Styles

Country Oak

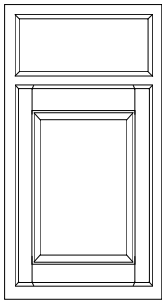

C4 - Oak

A standard overlay, 1″ reveal, 5 piece solid wood with a raised MDF veneer center panel Mortise and Tenon construction, slab drawer front. Solid wood in a Honey finish.

Concord Collection

The Concord Collection is our full-overlay all plywood cabinet, which comes with full 1/2″ back panels, complete with solid wood dovetail drawer box and a 5-piece drawer front, enhanced by a soft-close feature and full extension under-mount glides to create a smooth glide. The cabinetry is equipped with 3/4″ adjustable shelves with metal clips and six way, soft close, adjustable clip-on hinges. Natural wood finished interiors allow for practicality and ease of maintenance.

***Please note, cabinet door and box dimensions may vary by 1/8″**

Price Codes

A	B	C	D	M	N	O	P
Elegant White	Fashion White	Park Avenue White	Newport Plus (stain)	Elegant Plus	Fashion Plus	Sydney Plus (paint)	Sydney Plus (Stain)
Elegant Ocean	Fashion Ocean	Park Avenue Ocean		Newport Plus (paint)		Richmond Plus	
Elegant Smoky Grey	Elegant Stone	Richmond White					
Newport White		Richmond Stone					
		Sydney White					

Door Styles

Elegant

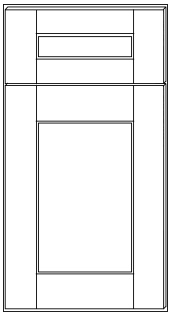

A full overlay 5 piece solid wood, with solid MDF veneer flat center panel. Mortise and Tenon construction.

Fashion

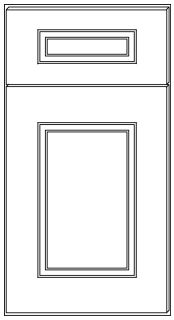

A full overlay 5 piece solid wood, with solid MDF veneer flat center panel. Mortise and Tenon construction.

Sydney

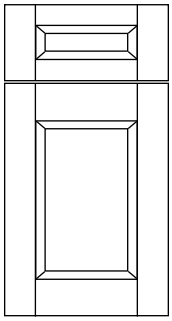

A full overlay 5 piece solid wood, with solid MDF veneer flat center panel. French mitered construction.

Newport

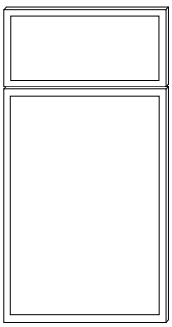

A full overlay 5 piece solid wood, with solid MDF veneer flat center panel with a 3/4″ frame.

Richmond

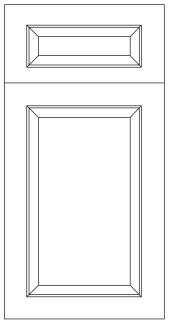

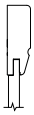

A full overlay 5 piece solid wood, with solid MDF veneer flat center panel. Mitered construction.

Park Avenue

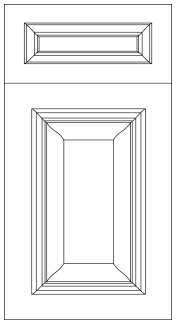

A full overlay 5 piece solid wood, raised panel MDF veneer center. Mitered construction.

Classic Collection

White Laminate Box

Composed of a frame-less box construction, with double white wall metal drawer with ½″ plywood bottom. Outfitted with full extension, under-mount drawer glides, as well as the soft-close feature. Features six way adjustable soft close hinges, ¾″ adjustable full-depth plywood shelves, and dowel and glue-clamped assembly construction

Maple Box

Composed of a frame-less box construction, complete with solid wood dovetail drawer box . Outfitted with full extension, under-mount drawer glides, as well as the soft-close feature. Features six way adjustable soft close hinges, ¾″ adjustable full-depth plywood shelves, and dowel and glue-clamped assembly construction.

***Please note, cabinet door and box dimensions may vary by 1/8″**

Price Codes

E	F	G	H	I	J	K
Broadway	Milano	Versailles White	Versailles Plus (paint)	Versailles Plus (stain)	Alvic Syncron (textured)	Alvic Zenit (matte)
		Highland White	Highland Plus			Alvic Luxe (high gloss)

Door Styles

Broadway

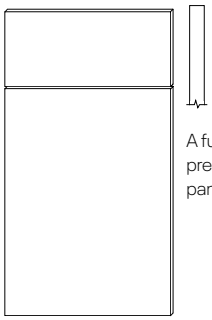

A full overlay low pressure laminate flat panel MDF door.

Milano

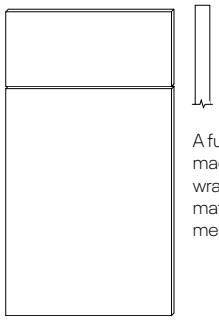

A full overlay slab door made from a MDF core, wrapped in PET with a matching edgeband and melamine back.

Versailles

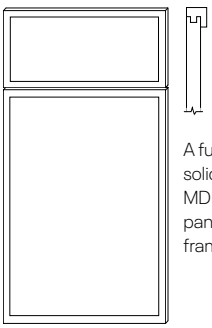

A full overlay 5 piece solid wood, with solid MDF veneer flat center panel with a 3/4″ frame.

Highland

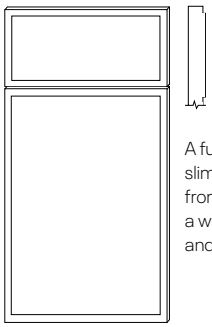

A full overlay reverse slim shaker door made from a MDF core, with a white melamine back and painted front.

Alvic

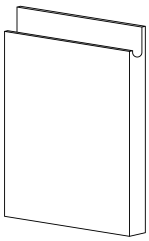

Finger-Pull
18mm / ¾″

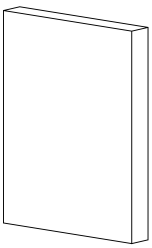

Slab
18mm / ¾″

***Full color list available on website**

Alvic doors come with a color matching soft postforming edge band. Finger pull and slab doors are 18mm thick.

Comparison Chart

Comparison Guide

Collection	Door Style			Item Codes		Interior Color	Hardware				Finished Side	Toe Kick Thickness	Back Panel	HA/HR32.5	HOODS	Upgrades Available				Cut			Replacement parts	
	Name	Door Construction	Door Reveal	Assembled	RTA		Hinges	Glides	Drawer box	Blum Upgrade						Matching Edgeband	Base Full Depth Shelf	Finished Interior	Cut For Glass	Depth	Width	Height	Cab Parts Items	Hardware Items
Country	Country Oak	2" Raised panel Cope & Stick	1"	C	CR	Maple Paper Finish	DTC Adjustable Hinges	DTC Epoxy White Side-Mount	5/8" butt Joint Plywood	Not Available	Pre-Finished To Door Color	1/2" Extended	1/2"	N	N	Not Available	Not Available	Not Available	Available	Y	N	N	C4-	CHW-C4-
Luxor	Luxor	2.5" Wide Shaker Cope & Stick	1/2"	L	LR	Maple Paper Finish	DTC Soft-close adjustable hinges	DTC 7/8 Extension	5/8 Wood Dovetail	Not Available	Pre-Finished To Door Color	1/2" Inset	1/2"	Y	Y	Not Available	Available	Available	Available	Y	N	N	LUX-	CHW-LUX-
Concord	Elegant	3" Wide Shaker Cope & Stick	1/4"	EB	EBR	Maple UV Finish	DTC Soft close 6 way adjustable	DTC Full Extension	3/4 Wood Dovetail	Available	Pre-Finished To Door Color	1/2" Extended	1/2" + 3" Hanging Rails	N	Y	Not Available	Available	Available	Available	Y	N	N	CONA-	CHW-CON-
	Elegant Plus	3" Wide Shaker Cope & Stick	1/4"	EBP	Not Available	Maple UV Finish	Blum Soft-close 6 way adjustable Clip on	Blum Full Extension	3/4 Wood Dovetail	Standard	Finished By Request	1/2" Extended	1/2" + 3" Hanging Rails	N	Y	Not Available	Available	Available	Available	Y	N	N	CONA-	CHW-B-CON-
	Fashion	3" Wide Step Shaker Cope & Stick	1/4"	FB	FBR	Maple UV Finish	DTC Soft-close 6 way adjustable	DTC Full Extension	3/4 Wood Dovetail	Available	Pre-Finished To Door Color	1/2" Extended	1/2" + 3" Hanging Rails	N	Y	Not Available	Available	Available	Available	Y	N	N	CONA-	CHW-CON-
	Fashion Plus	3" Wide Step Shaker Cope & Stick	1/4"	FBP	Not Available	Maple UV Finish	Blum Soft-close 6 way adjustable Clip on	Blum Full Extension	3/4 Wood Dovetail	Standard	Finished By Request	1/2" Extended	1/2" + 3" Hanging Rails	N	Y	Not Available	Available	Available	Available	Y	N	N	CONA-	CHW-B-CON-
	Richmond	3" Wide Mitered	1/4"	RB	RBR	Maple UV Finish	DTC Soft-close 6 way adjustable	DTC Full Extension	3/4 Wood Dovetail	Available	Pre-Finished To Door Color	1/2" Extended	1/2" + 3" Hanging Rails	N	Y	Not Available	Available	Available	Available	Y	N	N	CONA-	CHW-CON-
	Richmond Plus	3" Wide Mitered	1/4"	RBP	Not Available	Maple UV Finish	Blum Soft-close 6 way adjustable Clip on	Blum Full Extension	3/4 Wood Dovetail	Standard	Finished By Request	1/2" Extended	1/2" + 3" Hanging Rails	N	Y	Not Available	Available	Available	Available	Y	N	N	CONA-	CHW-B-CON-
	Sydney	3" Wide French Miter	1/4"	SB	SBR	Maple UV Finish	DTC Soft-close 6 way adjustable	DTC Full Extension	3/4 Wood Dovetail	Available	Pre-Finished To Door Color	1/2" Extended	1/2" + 3" Hanging Rails	N	Y	Not Available	Available	Available	Available	Y	N	N	CONA-	CHW-CON-
	Sydney Plus	3" Wide French Miter	1/4"	SBP	Not Available	Maple UV Finish	Blum Soft-close 6 way adjustable Clip on	Blum Full Extension	3/4 Wood Dovetail	Standard	Finished By Request	1/2" Extended	1/2" + 3" Hanging Rails	N	Y	Not Available	Available	Available	Available	Y	N	N	CONA-	CHW-B-CON-
	Sydney Oak	3" Wide French Miter	1/4"	SKP	Not Available	Maple UV Finish	Blum Soft-close 6 way adjustable Clip on	Blum Full Extension	3/4 Wood Dovetail	Standard	Finished By Request	1/2" Extended	1/2" + 3" Hanging Rails	N	Y	Not Available	Available	Available	Available	Y	N	N	CONA-	CHW-B-CON-
	Newport	Slim Shaker Cope & Stick	1/4"	NB	NBR	Maple UV Finish	DTC Soft-close 6 way adjustable	DTC Full Extension	3/4 Wood Dovetail	Available	Pre-Finished To Door Color	1/2" Extended	1/2" + 3" Hanging Rails	N	Y	Not Available	Available	Available	Available	Y	N	N	CONA-	CHW-CON-
	Newport Plus	Slim Shaker Cope & Stick	1/4"	NBP	Not Available	Maple UV Finish	Blum Soft-close 6 way adjustable Clip on	Blum Full Extension	3/4 Wood Dovetail	Standard	Finished By Request	1/2" Extended	1/2" + 3" Hanging Rails	N	Y	Not Available	Available	Available	Available	Y	N	N	CONA-	CHW-B-CON-
	Newport Oak	Slim Shaker Cope & Stick	1/4"	NKP	Not Available	Maple UV Finish	Blum Soft-close 6 way adjustable Clip on	Blum Full Extension	3/4 Wood Dovetail	Standard	Finished By Request	1/2" Extended	1/2" + 3" Hanging Rails	N	Y	Not Available	Available	Available	Available	Y	N	N	CONA-	CHW-B-CON-
	Park Ave	Mitered Raised Panel	1/4"	PB	PBR	Maple UV Finish	DTC Soft-close 6 way adjustable	DTC Full Extension	3/4 Wood Dovetail	Available	Pre-Finished To Door Color	1/2" Extended	1/2" + 3" Hanging Rails	N	Y	Not Available	Available	Available	Available	Y	N	N	CONA-	CHW-CON-

Classic

Broadway	Slab Matching Color Front and Back Melamine	1/8"	BMW	Not Available	White Melamine	DTC Soft-close 6 way adjustable Clip on	DTC Full Extension	Metal Drawer box	Available	Field applied Finished end	3/4" Inset	3/4"	Y	N	Available	Standard	Not Available	Not Available	Y	Y	N	CLWA-	CHW-CLW-
	Slab Matching Color Front and Back Melamine	1/8"	BMM	Not Available	Maple Melamine	DTC Soft-close 6 way adjustable Clip on	DTC Full Extension	3/4 Wood Dovetail	Available	Field applied Finished end	3/4" Inset	3/4"	Y	N	Available	Standard	Not Available	Not Available	Y	Y	N	CLMA-	CHW-CLM-
Milano	Slab Front PET - Back Matching Color Melamine	1/8"	MPW	Not Available	White Melamine	Blum Soft-close 6 way adjustable Clip on	Blum Full Extension	Metal Drawer box	Standard	Finished By Request	3/4" Inset	3/4"	Y	N	Available	Standard	Available	Not Available	Y	Y	N	CLWA-	CHW-B-CLW-
	Slab Front PET - Back Matching Color Melamine	1/8"	MPM	Not Available	Maple Melamine	Blum Soft-close 6 way adjustable Clip on	Blum Full Extension	3/4 Wood Dovetail	Standard	Finished By Request	3/4" Inset	3/4"	Y	N	Available	Standard	Available	Not Available	Y	Y	N	CLMA-	CHW-B-CLM-
Versailles	Slim Shaker Cope & Stick	1/8"	VBW	Not Available	White Melamine	DTC Soft-close 6 way adjustable Clip on	DTC Full Extension	Metal Drawer box	Available	Finished By Request	3/4" Inset	3/4"	N	Y	Available	Standard	Available	Available	Y	N	N	CLWA-	CHW-CLW-
	Slim Shaker Cope & Stick	1/8"	VBM	Not Available	Maple Melamine	DTC Soft-close 6 way adjustable Clip on	DTC Full Extension	3/4 Wood Dovetail	Available	Finished By Request	3/4" Inset	3/4"	N	Y	Available	Standard	Available	Available	Y	N	N	CLMA-	CHW-CLM-
Versailles Plus	Slim Shaker Cope & Stick	1/8"	VBWP	Not Available	White Melamine	Blum Soft-close 6 way adjustable Clip on	Blum Full Extension	Metal Drawer box	Standard	Finished By Request	3/4" Inset	3/4"	N	Y	Available	Standard	Available	Available	Y	N	N	CLWA-	CHW-B-CLW-
	Slim Shaker Cope & Stick	1/8"	VBMP	Not Available	Maple Melamine	Blum Soft-close 6 way adjustable Clip on	Blum Full Extension	3/4 Wood Dovetail	Standard	Finished By Request	3/4" Inset	3/4"	N	Y	Available	Standard	Available	Available	Y	N	N	CLMA-	CHW-B-CLM-
Versailles Oak	Slim Shaker Cope & Stick	1/8"	VKWP	Not Available	White Melamine	Blum Soft-close 6 way adjustable Clip on	Blum Full Extension	Metal Drawer box	Standard	Finished By Request	3/4" Inset	3/4"	N	Y	Available	Standard	Available	Available	Y	N	N	CLWA-	CHW-B-CLW-
	Slim Shaker Cope & Stick	1/8"	VKMP	Not Available	Maple Melamine	Blum Soft-close 6 way adjustable Clip on	Blum Full Extension	3/4 Wood Dovetail	Standard	Finished By Request	3/4" Inset	3/4"	N	Y	Available	Standard	Available	Available	Y	N	N	CLMA-	CHW-B-CLM-
Highland	Reversed Slim Shaker - White Melamine Back	1/8"	HBW	Not Available	White Melamine	DTC Soft-close 6 way adjustable Clip on	DTC Full Extension	Metal Drawer box	Available	Finished By Request	3/4" Inset	3/4"	N	Y	Available	Standard	Available	Not Available	Y	N	N	CLWA-	CHW-CLW-
	Reversed Slim Shaker - White Melamine Back	1/8"	HBM	Not Available	Maple Melamine	DTC Soft-close 6 way adjustable Clip on	DTC Full Extension	3/4 Wood Dovetail	Available	Finished By Request	3/4" Inset	3/4"	N	Y	Available	Standard	Available	Not Available	Y	N	N	CLMA-	CHW-CLM-
Highland Plus	Reversed Slim Shaker - White Melamine Back	1/8"	HBWP	Not Available	White Melamine	Blum Soft-close 6 way adjustable Clip on	Blum Full Extension	Metal Drawer box	Standard	Finished By Request	3/4" Inset	3/4"	N	Y	Available	Standard	Available	Not Available	Y	N	N	CLWA-	CHW-B-CLW-
	Reversed Slim Shaker - White Melamine Back	1/8"	HBMP	Not Available	Maple Melamine	Blum Soft-close 6 way adjustable Clip on	Blum Full Extension	3/4 Wood Dovetail	Standard	Finished By Request	3/4" Inset	3/4"	N	Y	Available	Standard	Available	Not Available	Y	N	N	CLMA-	CHW-B-CLM-
Alvic	Flat panel	1/8"	ALLW LUXE	Not Available	White Melamine	Blum Soft-close 6 way adjustable Clip on	Blum Full Extension	Metal Drawer box	Standard	Field applied Finished end	3/4" Inset	3/4"	Y	N	Standard	Standard	Not Available	Not Available	Y	Y	Y	CLWA-	CHW-B-CLW-
	Flat panel	1/8"	ALLM LUXE	Not Available	Maple Melamine	Blum Soft-close 6 way adjustable Clip on	Blum Full Extension	3/4 Wood Dovetail	Standard	Field applied Finished end	3/4" Inset	3/4"	Y	N	Standard	Standard	Not Available	Not Available	Y	Y	Y	CLMA-	CHW-B-CLM-
	Flat panel	1/8"	ALSW SYNCRON	Not Available	White Melamine	Blum Soft-close 6 way adjustable Clip on	Blum Full Extension	Metal Drawer box	Standard	Field applied Finished end	3/4" Inset	3/4"	Y	N	Standard	Standard	Not Available	Not Available	Y	Y	Y	CLWA-	CHW-B-CLW-
	Flat panel	1/8"	ALSM SYNCRON	Not Available	Maple Melamine	Blum Soft-close 6 way adjustable Clip on	Blum Full Extension	3/4 Wood Dovetail	Standard	Field applied Finished end	3/4" Inset	3/4"	Y	N	Standard	Standard	Not Available	Not Available	Y	Y	Y	CLMA-	CHW-B-CLM-
	Flat panel	1/8"	ALZW ZENIT	Not Available	White Melamine	Blum Soft-close 6 way adjustable Clip on	Blum Full Extension	Metal Drawer box	Standard	Field applied Finished end	3/4" Inset	3/4"	Y	N	Standard	Standard	Not Available	Not Available	Y	Y	Y	CLWA-	CHW-B-CLW-
	Flat panel	1/8"	ALZM ZENIT	Not Available	Maple Melamine	Blum Soft-close 6 way adjustable Clip on	Blum Full Extension	3/4 Wood Dovetail	Standard	Field applied Finished end	3/4" Inset	3/4"	Y	N	Standard	Standard	Not Available	Not Available	Y	Y	Y	CLMA-	CHW-B-CLM-

Displays & Samples

Door Samples

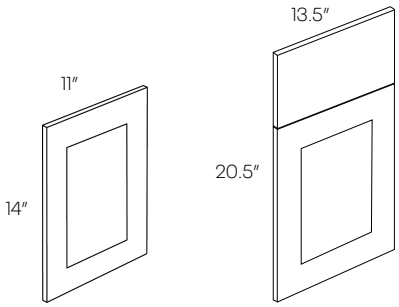

SD SBF

Collection	SD	SBF
Luxor/Country	18	25
Concord	18	25
Concord Plus (Paint)	22	22
Concord Plus (Stain)	24	24
Classic	18	25
Classic Plus (Paint)	22	22
Classic Plus (Stain)	24	24

• Net Price

Sample Kits

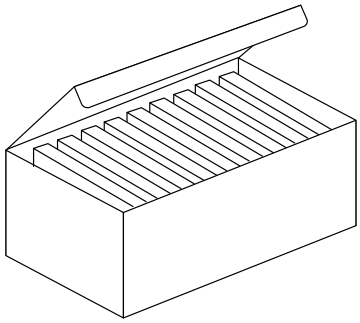

Item Number	Description	Price
DISP-WK-SD-SET	Includes 10 doors & full set of swatch books	250
DISP-B-SD-SET	12 Broadway doors	72
DISP-M-SD-SET	12 Milano doors	96
DISP-H-SD-SET	11 Highland doors	110
DISP-E-SD-SET	14 Elegant doors	110
DISP-F-SD-SET	12 Fashion doors	110
DISP-V-N-SD-SET	13 Newport/Versailles doors	125
DISP-R-SD-SET	12 Richmond doors	125
DISP-S-SD-SET	13 Sydney doors	125
DISP-P-SD-SET	2 Park Ave doors	125
DISP-L-SD-SET	5 Luxor Doors	72
DISP-CB6	Single Color Block Samples	6
DISP-PFCHIPS	Countertop Samples	0
DISP-MLDG	Molding Samples	47
DISP-GT6x6-SET	All Granite Samples	50
ALL-CS6x12	Alvic Luxe Color Samples	18
ALS-CS6x12	Alvic Syncron Color Samples	18
ALZ-CS6x12	Alvic Zenit Color Samples	18

• Net Price

Mini Base Cabinets

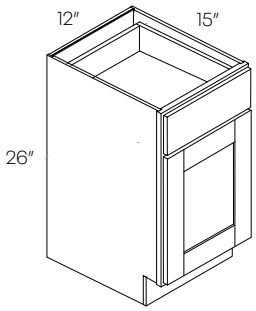

DISP-L10-B12M

Item Number	Description	Price
DISP-L10-B12M	Luxor	95
DISP-EB10-B12M	Concord (Elegant)	130
DISP-MPW400-B12M	Milano (Classic)	132
DISP-BMM600-B12M	Broadway (Classic)	132

* Available in all styles in White
• Net Price

Swatch Books

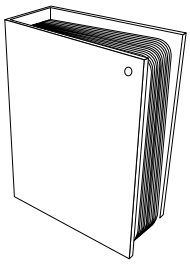

Item Number	Description	Price
DISP-C-BOOK-M	Milano Swatch Book - 12 colors	25
DISP-C-BOOK-B	Broadway Swatch Book - 12 colors	25
DISP-C-BOOK-PLUS	Plus+ Swatch Book - 12 colors	25
DISP-C-BOOK-STOCK	Concord & Luxor Swatch Book - 7 colors	25
DISP-C-BOOK-SET	Full set of swatch books	100

• Net Price

Literature

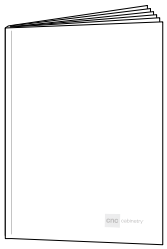

Item Number	Description	Price
DISP-SPEC	Spec Book	0
DISP-CAT	Catalog	0
DISP-TRIFOLD	Door Guide	0
DISP-CNTP	Countertop Guide	0
DISP-LUXPRODUCT	Luxor Product Guide	0
DISP-SUMMARY	Collection Cummary Guide	0
DISP-BINDKIT	Welcome Kit	0
DISP-CATALOG-ALV	Alvic Guide	0
DISP-VAN	Vanity Guide	0

Showroom Displays

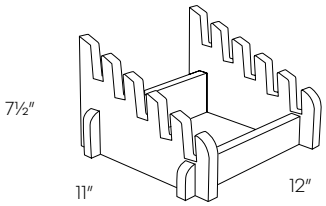

DISP-STAND
*Holds up to 5 doors

Item Number	Description	Price
DISP-STAND	Mini tabletop door stand	50
DISP-MERCH-L05	Luxor Harvest Merchandise Display	330
DISP-MERCH-EB23	Elegant Stone Merchandise Display	330
DISP-CENTER	Display Center	1400
DISP-CENTER-CON-LUX	L02, L03, L05, L10, NBP110, EBP108, EBP109, NBP201, PB27, FBP106, SBP107, RB23, EBP101, RNP102, RBP103, RBP104, NBP105, SKP200	1400
DISP-CENTER-MIX	L05, L10-5P, NKP200, SKP201, MP450, MP400, BM650, BM655, RB23, EB02, MP451, FBP105, EBP103, NBP107, FBP101, EBP105, EBP110, SKP102	1400
DISP-CENTER-CLS	BM600, MP400, BM655, MP403, MP404, MP452, MP451, BM654, HB109, BM650, BM656, MP402, MP450, BM 652, MP452, VKP200, VKP201, MP405	1400
DISP-KIOSK	Display Kiosk	1800

• Net Price

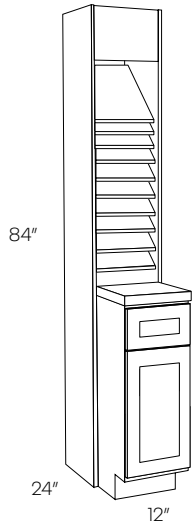

DISP-MERCH

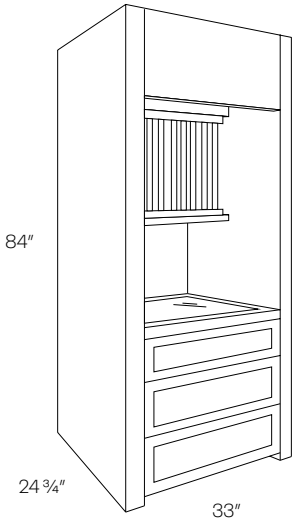

DISP-CENTER
*Doors included
*Available in EB23 (Elegant Stone)

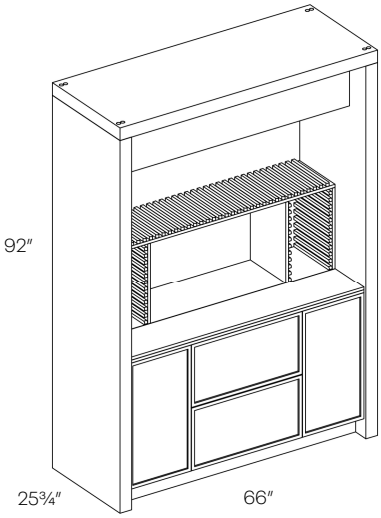

DISP-KIOSK
* Doors included
*Harvest Stain frame paired with Versailles White Cabinets

Cabinet & Door Information

Luxor Collection

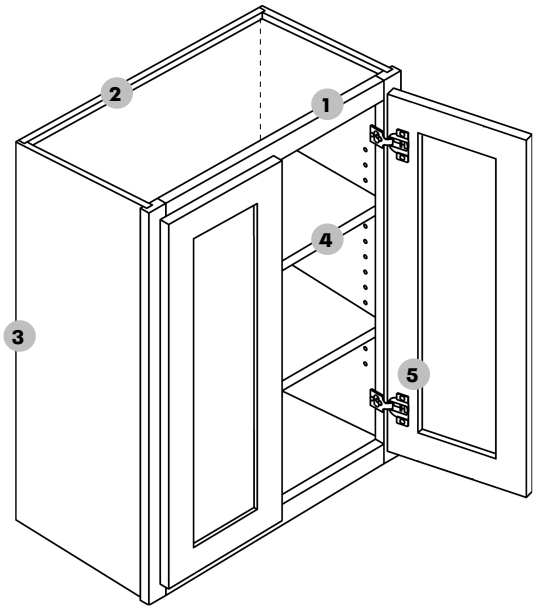

1. **Frame** — 3/4″ thick Solid Wood, 1½″ wide, kiln-dried solid hardwood. Assembled with glue and nails, under clamp pressure, which ensures squareness.
2. **Back panel** — Made of 1/2″ plywood. Dado joints stapled into cabinet sides, glued and screwed into top and bottom.
3. **End panel** — Top and bottom 1/2″ plywood substrate, with light maple woodgrain laminate interior. Matching exterior.
4. **Shelves** — 3/4″ thick, plywood; fully adjustable.
5. **Hinges —** Heavy duty steel concealed hinge, adjustable with soft-close mechanism.

   *36″ and 42″ Wall cabinets will have 3 hinges

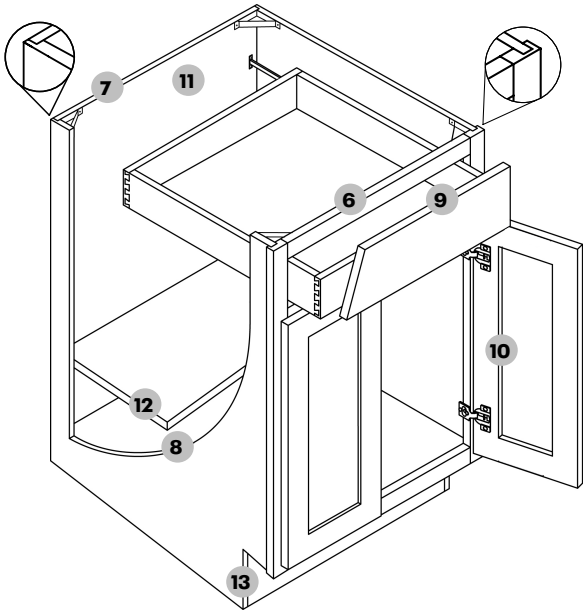

6. **Base frame** — 3/4″ thick Solid Wood, 1½″ wide, kiln-dried solid hardwood. Assembled with glue and nails, under clamp pressure, which ensures squareness.
7. **Back panel** — Made of 1/2″ plywood. Dado joints stapled into cabinet sides, glued and screwed into top and bottom.
8. **End panel** — 1/2″ plywood substrate, with light maple woodgrain laminate interior. Matching exterior.
9. **Drawers** — 5/8 ″ solid wood Dovetail sides 3/8″ thick bottom
10. **Hinges —** Heavy duty steel concealed hinge, adjustable with soft-close mechanism.
11. **Glides** — 3/4 extension, high quality soft-close under mounted glides.
12. **Shelves** — 3/4″ thick, plywood; fully adjustable. (10″ deep)
13. **Toe kick** — 4½″ Toe kick with 3″ inset on all standard base and vanity cabinets.

Partial Overlay

1/2″ Reveal

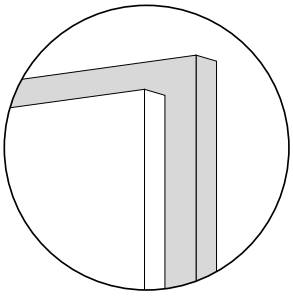

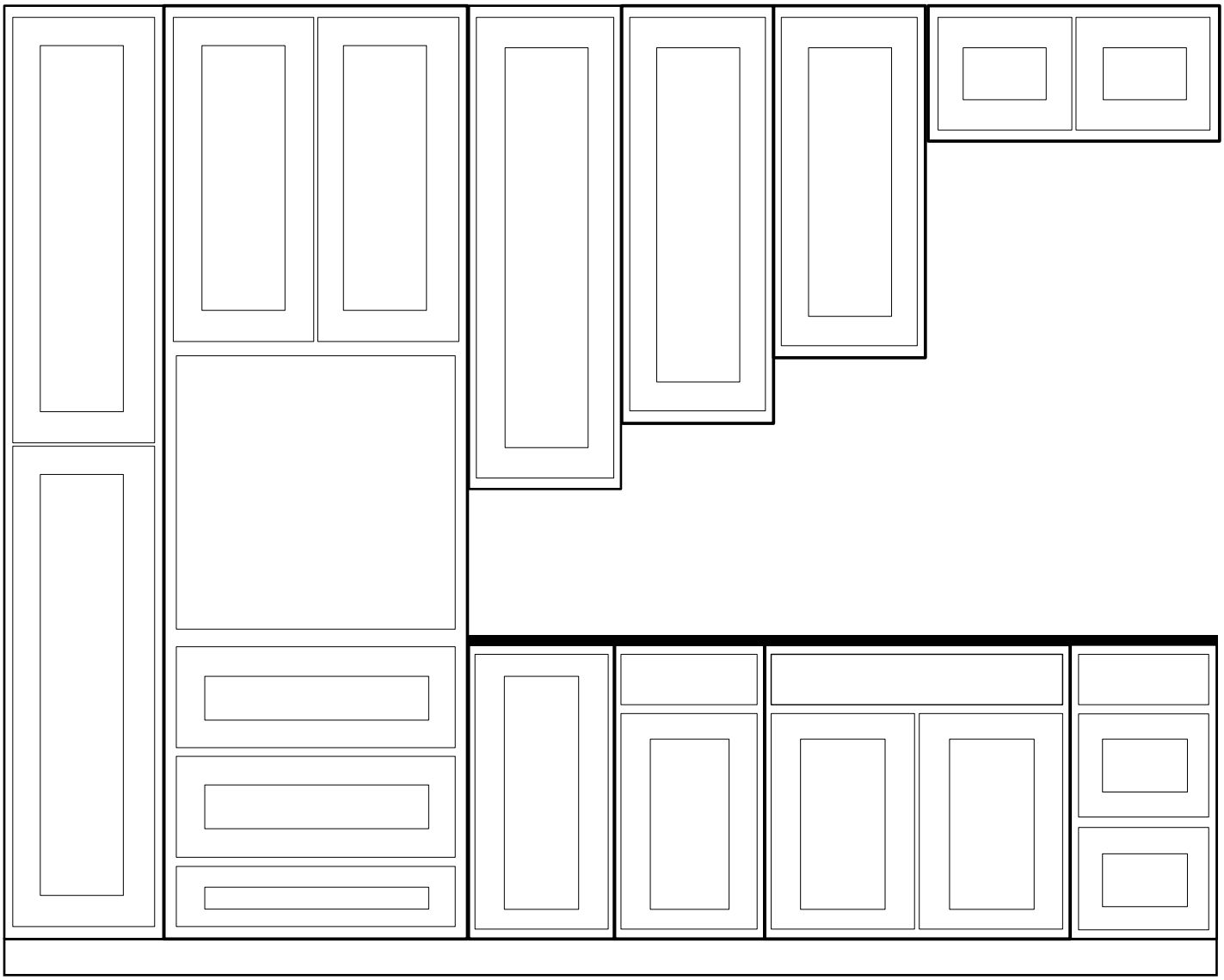

Luxor

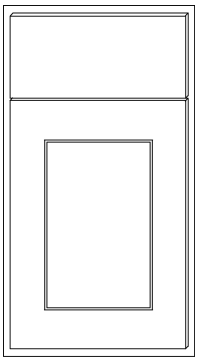

A partial ½" reveal,2 ½" wide shaker style MDF door with a flat center panel, Mortise and Tenon construction, slab drawer front.

Finish	Price Code (Slab)	Price Code (5 Panel)
L02 - Smoky Grey (stain) (Birch/Hardwood door)	L	Z
L03-Misty Grey (paint) (MDF door)	L	Z
L05-Harvest (stain) (Hardwood door)	L	Z
L10-White (paint) (MDF door)	L	Z
L11-Espresso (stain) (Birch/Hardwood door)	L	Z

*Matching finished interiors are not available
*Glass doors are available for all wall cabinets

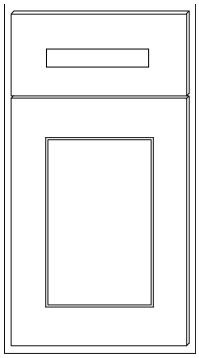

*5 Piece Drawer front

Specifications & Pricing

Luxor Collection

12″ High Wall Cabinet

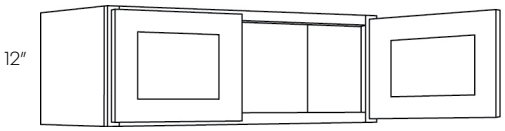

Item Number	L
3012	338
3312	351
3612	381
3912	411

• No Shelf

12″ High, 24″ Deep Wall Cabinet

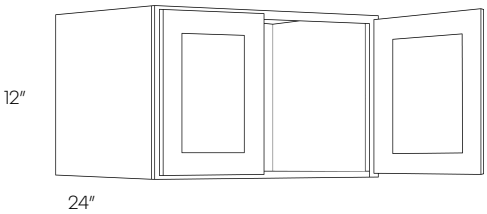

3612X24	508
3912X24	548

• No Shelf

15″ High Wall Cabinet

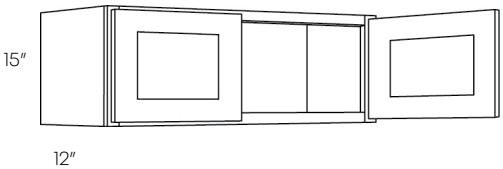

2415	334
3015	344
3315	359
3615	381
3915	420

• No Shelf

15″ High, 24″ Deep Wall Cabinet

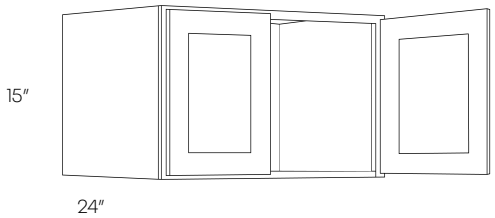

Item Number	L
3015X24	462
3615X24	514
3915X24	565

• No Shelf

18″ High Wall Cabinet

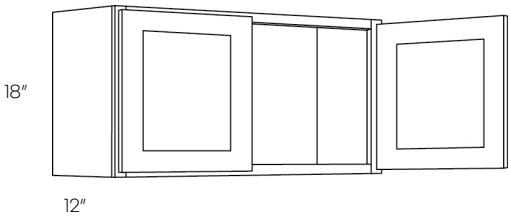

2118 (1 Door)	317
2418	334
2718	341
3018	349
3318	378
3618	433
3918	485

• No Shelf

18″ High, 24″ Deep Wall Cabinet

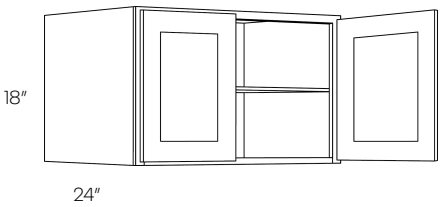

3018X24	514
3318X24	567
3618X24	579
3918X24	591

24″ High Wall Cabinet

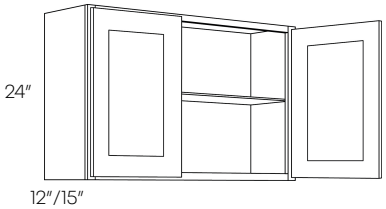

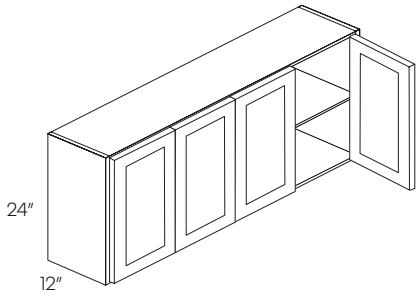

4824

Item Number	L
1824 (1 Door)	356
2424	458
2724	470
3024	480
3024X15	549
3324	511
3624	549
3924	600
4224	653
4824 (4 Door)	729

• Has One Shelf

24″ High, 24″ Deep Wall Cabinet

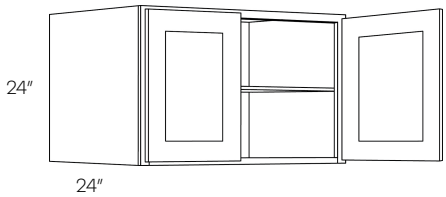

3024X24	641
3324X24	691
3624x24	741
3924x24	830

• Has One Shelf

30″ High 1 Door Wall Cabinet

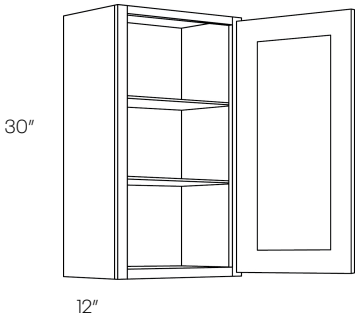

930	272
1230	303
1530	327
1830	368
2130	440

30″ High 2 Door Wall Cabinet

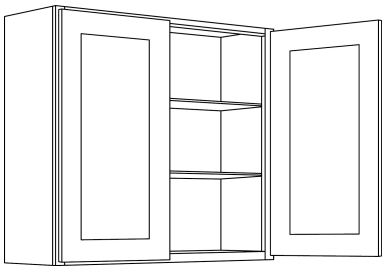

Item Number	L
2430	469
2730	516
3030	529
3330	575
3630	612
3930	660
4230	702

30″ High 4 Door Wall Cabinet

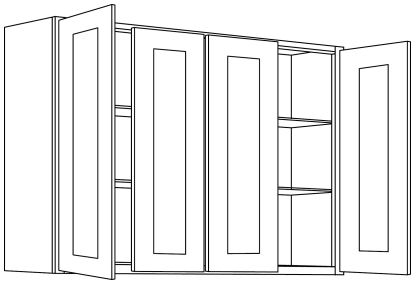

4830	794
5430	888

30″ High Open Wall Cabinet

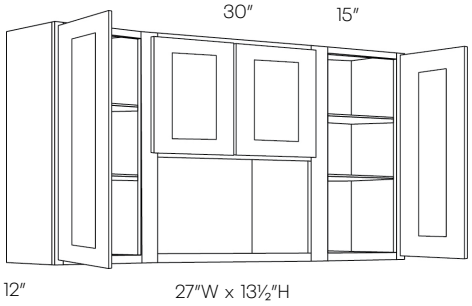

6030-O	907

• Opening Natural Interior Finish

Item Number	L

30″ High Blind Wall Cabinet

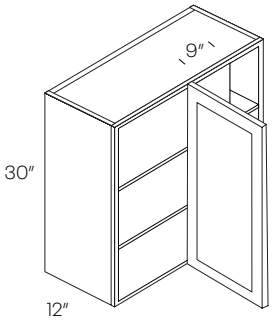

BLW27/BLW36

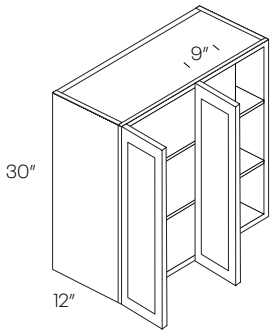

BLW39/BLW42

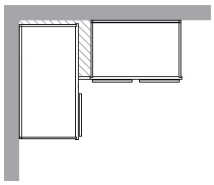

BLW27/3030	667
BLW30/3330	732
BLW36/3930	797
BLW42/4530	956
BLW45/4830	1000

- Reversible Left or Right
- Can be installed at actual size

Cabinet	Min. Pull	Max. Pull	Actual Size	Door(s)	Door Opening
BLW27/3030	27″	30″	27″	1230	9″ X 27″
BLW30/3330	33″	33″	30″	1530	12″ X 27″
BLW36/3930	36″	39″	36″	2130	18″ X 27″
BLW42/4530	42″	45″	42″	2730	24″ X 27″
BLW45/4830	45″	48″	45″	3030	27″ X 27″

30″ High Diagonal Corner Wall Cabinet

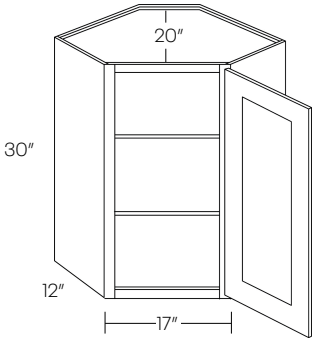

CW2430	683

- Requires 24″x24″ wall space

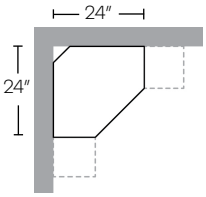

30″ High Corner Wall Cabinet

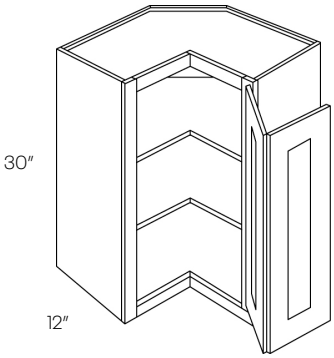

WSQ2430	786

- Requires 24″ X 24″ wall space
- Pie is 12″ X 12″

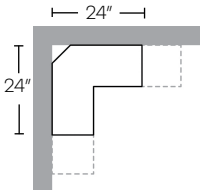

36″ High 1 Door Wall Cabinet

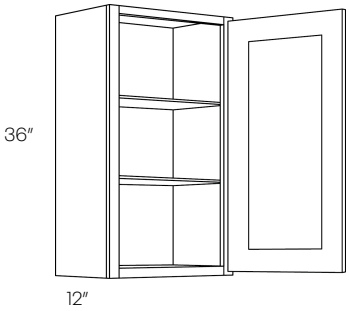

Item Number	L
936	310
1236	344
1536	371
1836	418
2136	499

36″ High 2 Door Wall Cabinet

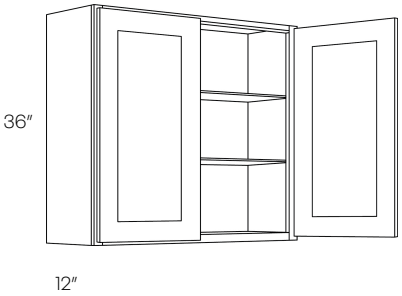

2436	535
2736	586
3036	604
3336	657
3636	698
4236	797

36″ High Blind Wall Cabinet

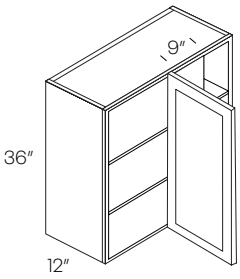

BLW27/BLW36

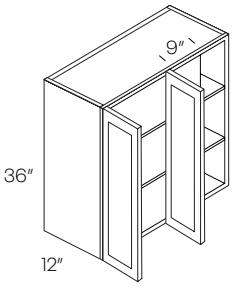

BLW39

BLW27/3036	759
BLW30/3336	835
BLW36/3936	911
BLW42/4536	987

- Reversible Left or Right
- Can be installed at actual size

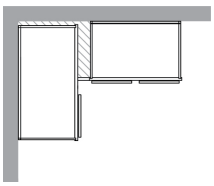

Cabinet	Min. Pull	Max. Pull	Actual Size	Door(s)	Door Opening
BLW27/3030	27″	30″	27″	1236	9″ X 33″
BLW30/3330	33″	33″	30″	1536	12″ X 33″
BLW36/3930	36″	39″	36″	2136	18″ X 33″
BLW42/4530	42″	45″	42″	2736	24″ X 33″

	Item Number	L
36″ High Diagonal Corner Wall Cabinet	**CW2436**	780

• Requires 24″x24″ wall space

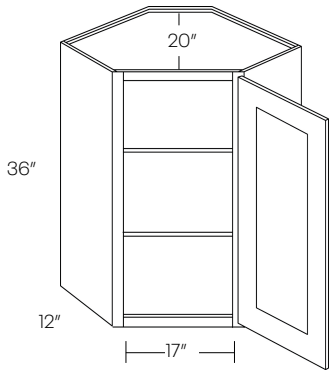

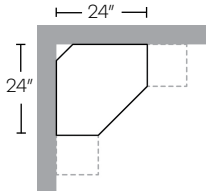

36″ High Corner Wall Cabinet	**WSQ2436**	827

• Requires 24″ X 24″ wall space
• Pie is 12″ X 12″

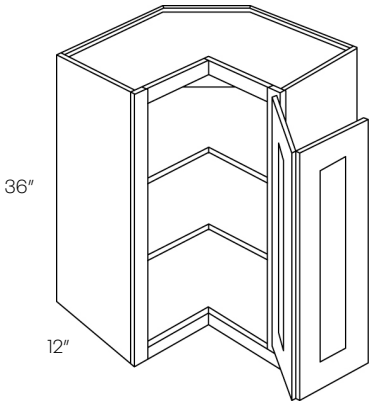

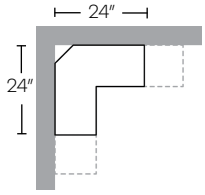

42″ High 1 Door Wall Cabinet

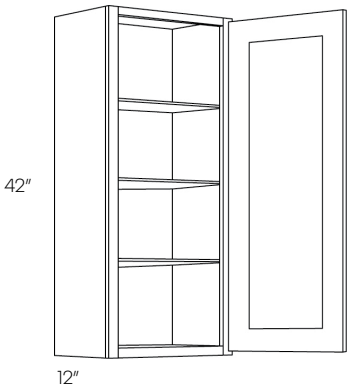

Item Number	L
942	366
1242	396
1542	438
1842	487
2142	580

42″ High 2 Door Wall Cabinet

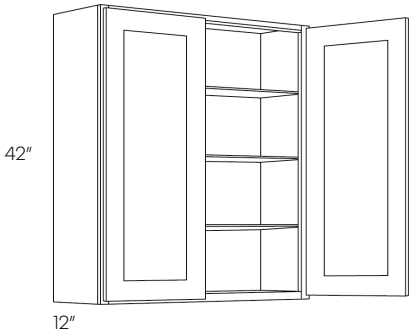

2442	622
2742	685
3042	710
3342	763
3642	810
4242	940

42″ High Blind Wall Cabinet

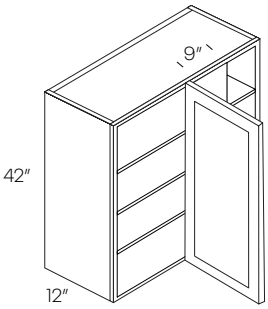

BLW27/BLW36

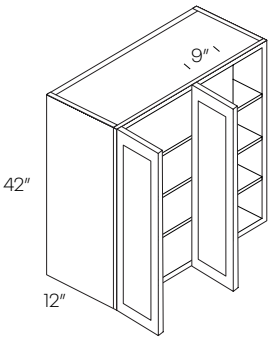

BLW39

BLW27/3042	861
BLW30/3342	948
BLW36/3942	1035
BLW42/4542	1122

- Reversible Left or Right
- Can be installed at actual size

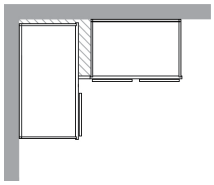

Cabinet	Min. Pull	Max. Pull	Actual Size	Door(s)	Door Opening
BLW27/3030	27″	30″	27″	1242	9″ X 39″
BLW30/3330	33″	33″	30″	1542	12″ X 39″
BLW36/3930	36″	39″	36″	2142	18″ X 39″
BLW42/4530	42″	45″	42″	2742	24″ X 39″

Item Number	L

42″ High Diagonal Corner Wall Cabinet

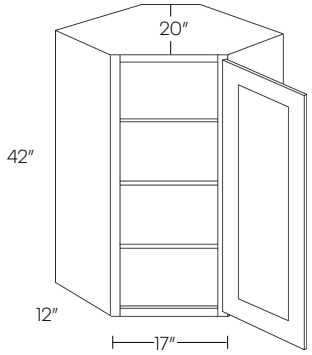

CW2442	888

• Requires 24″x24″ wall space

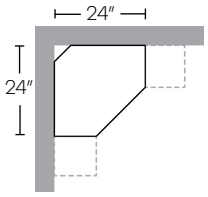

42″ High Corner Wall Cabinet

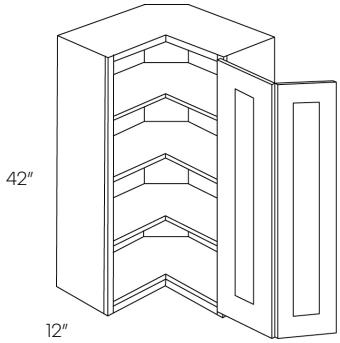

WSQ2442	1026

• Requires 24″ X 24″
• Pie is 12″ X 12″

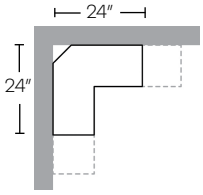

Single Door Wall End Cabinet

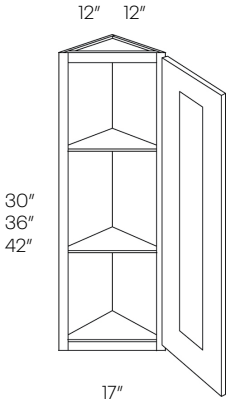

WEC1230	319
WEC1236	363
WEC1242	404

• 42″ has 3 shelves

	Item Number	L
Microwave Cabinet	**MW3030**	656

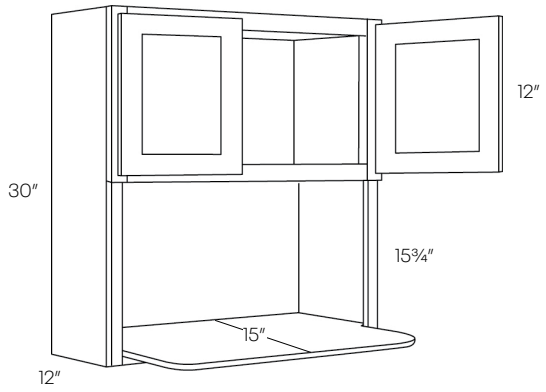

- Opening 27″ x 15¾″
- Shelf 15″ deep
- Shelf ships loose
- Depth of the shelf may be cut-down
- Finished Interior

Microwave Cabinet Shelf	**MW3018**	460

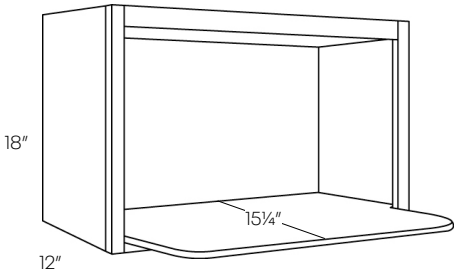

- Opening 27″ X 14¼″
- Shelf ships loose
- Depth of the shelf may be cut-down
- Finished Interior

1 Door Base Cabinet

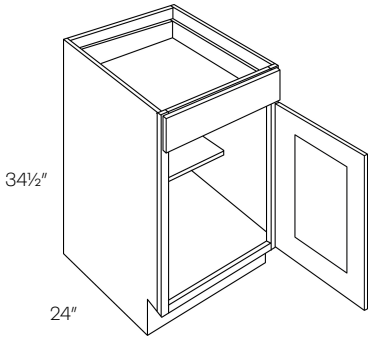

Item Number	L	Z
B9	396	406
B12	456	467
B15	477	489
B18	501	514
B21	571	585

- 10″ Deep Shelf

Full Height 1 Door Base Cabinet

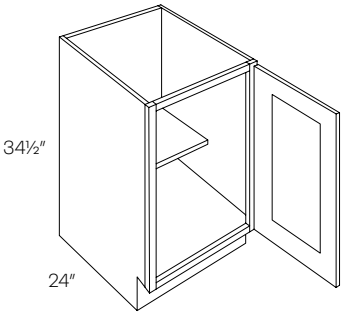

Item Number	L	Z
B9-FH	396	N/A
B12-FH	456	N/A
B15-FH	477	N/A
B18-FH	501	N/A
B21-FH	571	N/A

- 10″ Deep Shelf

*Full height doors will have a larger reveal on the bottom and will not align with other base cabinets

1 Drawer 2 Door Base Cabinet

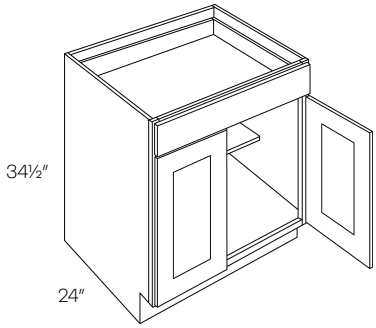

B24	639	655
B27	706	724

- 10″ Deep Shelf

Full Height 1 Drawer 2 Door Base Cabinet

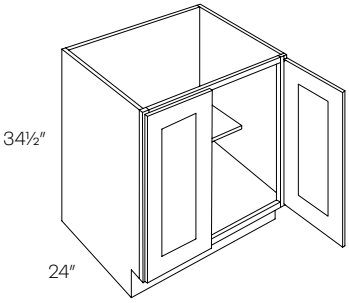

B24-FH	639	N/A
B27-FH	706	N/A

- 10″ Deep Shelf

*Full height doors will have a larger reveal on the bottom and will not align with other base cabinets

2 Drawer 2 Door Base Cabinet

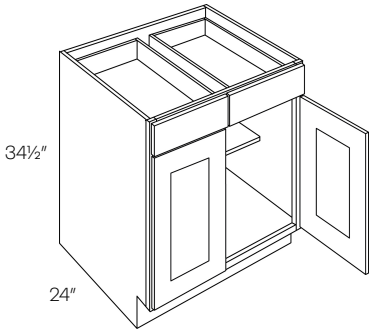

B30	769	788
B33	821	842
B36	861	883
B39	916	939
B42	965	989

- 10″ Deep Shelf

Full Height 2 Drawer 2 Door Base Cabinet

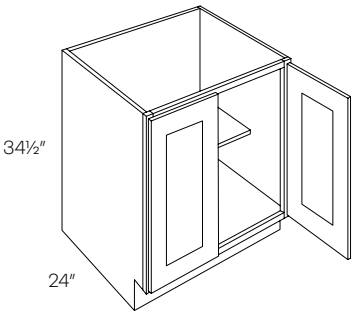

B30-FH	769	N/A
B33-FH	821	N/A
B36-FH	861	N/A
B39-FH	916	N/A
B42-FH	965	N/A

- 10″ Deep Shelf

*Full height doors will have a larger reveal on the bottom and will not align with other base cabinets

2 Drawer 4 Door Base Cabinet

Item Number	L	Z
B48	1070	1097

• 10″ Deep Shelf

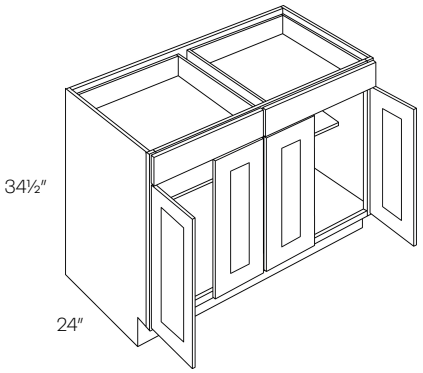

Full Height 2 Drawer 4 Door Base Cabinet

Item Number	L	Z
B48-FH	1070	N/A

• 10″ Deep Shelf

*Full height doors will have a larger reveal on the bottom and will not align with other base cabinets

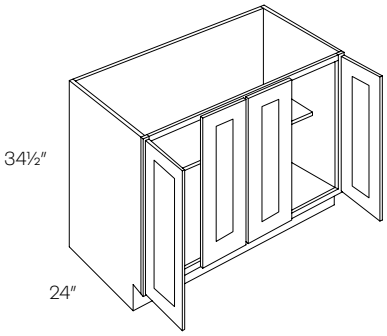

Blind Base Cabinet

BLB36/39	814	834
BLB39/42	840	861
BLB42/45	898	920
BLB45/48	961	985
BLB48/51	1035	1061

• Reversible Left or Right
• Must be pulled to the minimum position
* Left blind shown

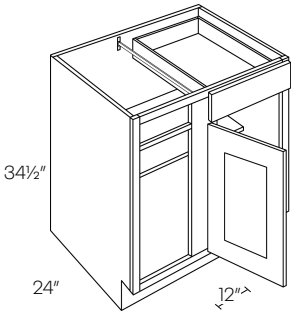

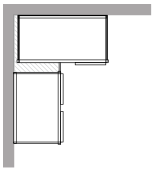

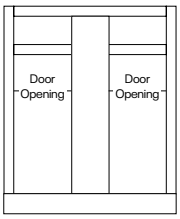

Cabinet	Min. Pull	Max. Pull	Actual Size	Door	Door Opening
BLB36/39	36″	39″	27″	B9	6″
BLB39/42	39″	42″	33″	B12	9″
BLB42/45	42″	45″	39″	B15	12″
BLB45/48	45″	48″	45″	B18	15″
BLB48/51	48″	51″	48″	B39	18″

N/A

Full Height Blind Base Cabinet

BLB36/39-FH	814	N/A
BLB39/42-FH	840	N/A
BLB42/45-FH	898	N/A
BLB45/48-FH	961	N/A
BLB48/51-FH	1035	N/A

• Reversible Left or Right
• Must be pulled to the minimum position
* Left blind shown
*Full height doors will have a larger reveal on the bottom and will not align with other base cabinets

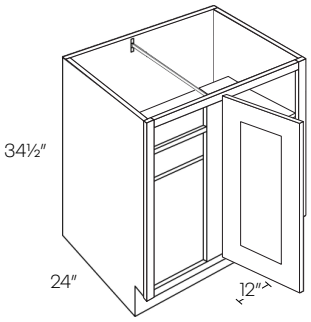

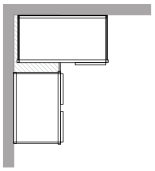

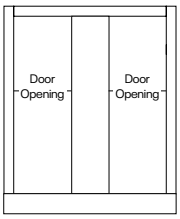

Cabinet	Min. Pull	Max. Pull	Actual Size	Door	Door Opening
BLB36/39	36″	39″	27″	B9	6″
BLB39/42	39″	42″	33″	B12	9″
BLB42/45	42″	45″	39″	B15	12″
BLB45/48	45″	48″	45″	B18	15″
BLB48/51	48″	51″	48″	B39	18″

1 Door Base Cabinet W/ 1 POS

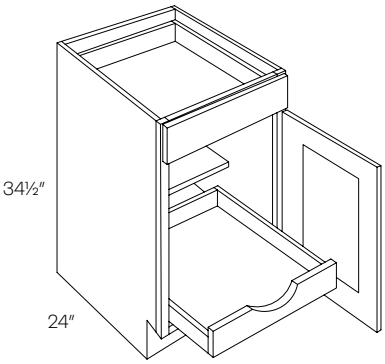

Item Number	L	Z
B12-POS1	777	796
B15-POS1	808	828
B18-POS1	855	876
B21-POS1	938	961

- 10″ Deep Shelf

1 Drawer 2 Door Base Cabinet W/ 1 POS

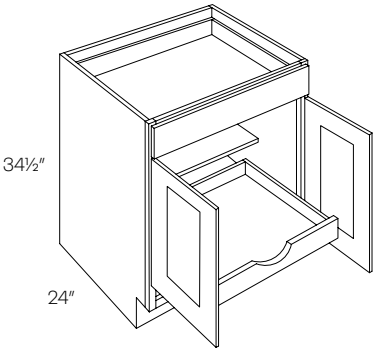

B24-POS1	1059	1085
B27-POS1	1136	1164

- 10″ Deep Shelf

2 Drawer 2 Door Base Cabinet W/1 POS

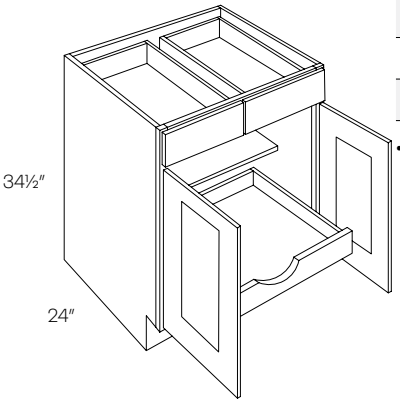

B30-POS1	1216	1246
B33-POS1	1238	1315
B36-POS1	1310	1343
B39-POS1	1466	1503
B42-POS1	1622	1663

- 10″ Deep Shelf

Full Height 1 Door Base Cabinet W/ 1 POS

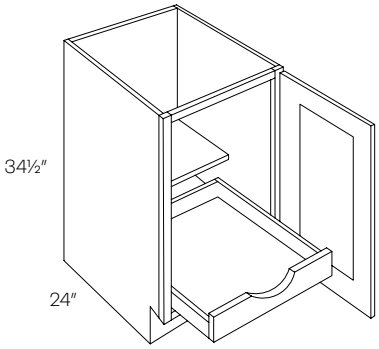

Item Number	L	Z
B12-FH-POS1	777	N/A
B15-FH-POS1	808	N/A
B18-FH-POS1	855	N/A
B21-FH-POS1	938	N/A

- 10″ Deep Shelf

*Full height doors will have a larger reveal on the bottom and will not align with other base cabinets

Full Height 1 Drawer 2 Door Base Cabinet W/ 1 POS

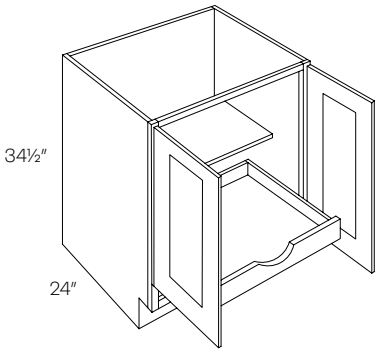

B24-FH-POS1	1059	N/A
B27-FH-POS1	1136	N/A

- 10″ Deep Shelf

*Full height doors will have a larger reveal on the bottom and will not align with other base cabinets

Full Height 2 Drawer 2 Door Base Cabinet W/1 POS

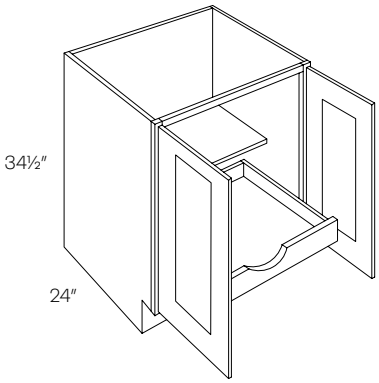

B30-FH-POS1	1216	N/A
B33-FH-POS1	1238	N/A
B36-FH-POS1	1310	N/A
B39-FH-POS1	1466	N/A
B42-FH-POS1	1622	N/A

- 10″ Deep Shelf

*Full height doors will have a larger reveal on the bottom and will not align with other base cabinets

1 Door Base Cabinet W/ 2 POS

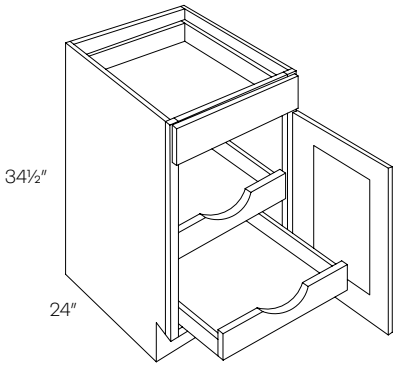

Item Number	L	Z
B12-POS2	987	1012
B15-POS2	1028	1054
B18-POS2	1101	1129
B21-POS2	1195	1225

1 Drawer 2 Door Base Cabinet W/ 2 POS

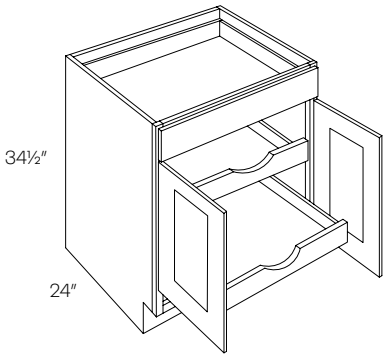

B24-POS2	1362	1396
B27-POS2	1453	1489

2 Drawer 2 Door Base Cabinet W/2 POS

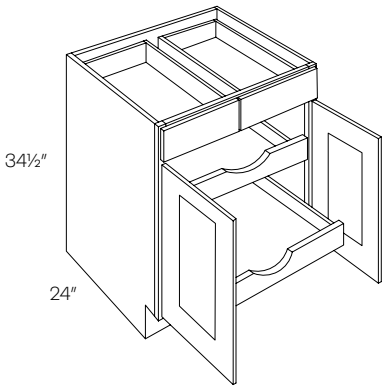

B30-POS2	1548	1587
B33-POS2	1629	1670
B36-POS2	1757	1801
B39-POS2	2018	2069
B42-POS2	2279	2336

Full Height 1 Door Base Cabinet W/ 2 POS

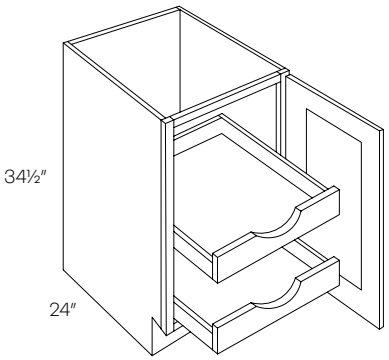

Item Number	L	Z
B12-FH-POS2	987	N/A
B15-FH-POS2	1028	N/A
B18-FH-POS2	1101	N/A
B21-FH-POS2	1195	N/A

*Full height doors will have a larger reveal on the bottom and will not align with other base cabinets

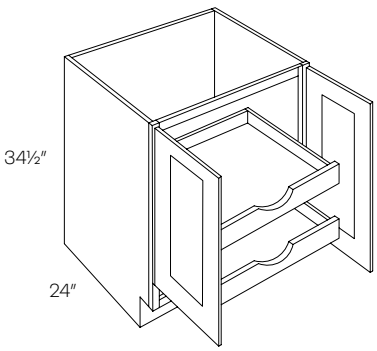

B24-FH-POS2	1362	N/A
B27-FH-POS2	1453	N/A

*Full height doors will have a larger reveal on the bottom and will not align with other base cabinets

Full Height 2 Drawer 2 Door Base Cabinet W/2 POS

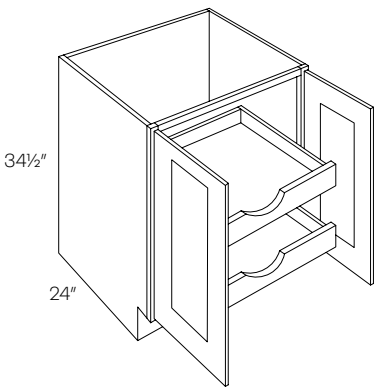

B30-FH-POS2	1548	N/A
B33-FH-POS2	1629	N/A
B36-FH-POS2	1757	N/A
B39-FH-POS2	2018	N/A
B42-FH-POS2	2279	N/A

*Full height doors will have a larger reveal on the bottom and will not align with other base cabinets

2 Drawer 4 Door Base Cabinet W/2 POS

Item Number	L	Z
B48-POS2	1785	1830

• 10″ Deep Shelf

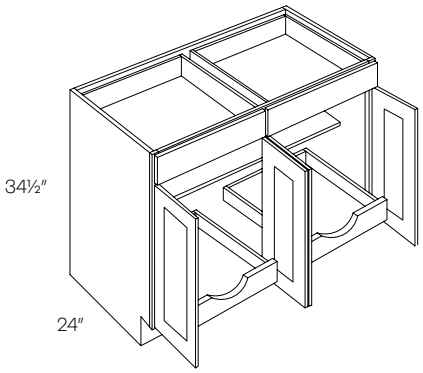

2 Drawer 4 Door Base Cabinet W/2 POS

B48-POS4	2501	2564

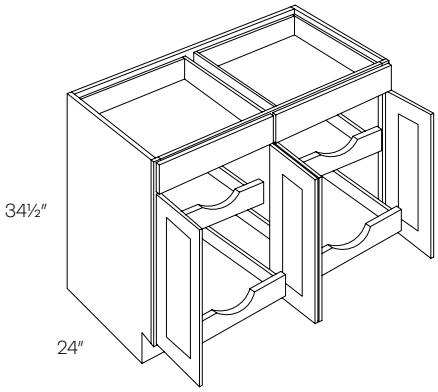

3 Drawer Base Cabinet

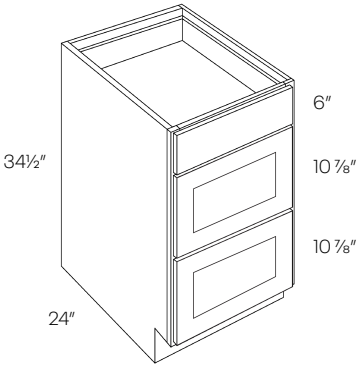

DB12	705	723
DB15	738	756
DB18	761	780
DB21	790	810
DB24	817	837
DB27	839	860
DB30	893	915
DB36	965	989

Full Height 2 Drawer 4 Door Base Cabinet W/2 POS

Item Number	L	Z
B48-FH-POS2	1785	N/A

• 10″ Deep Shelf

*Full height doors will have a larger reveal on the bottom and will not align with other base cabinets

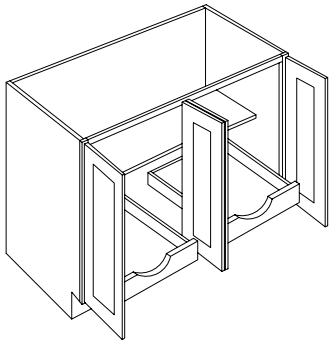

Full Height 2 Drawer 4 Door Base Cabinet W/2 POS

B48-FH-POS4	2501	N/A

*Full height doors will have a larger reveal on the bottom and will not align with other base cabinets

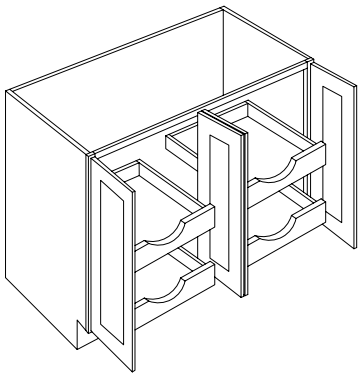

Diagonal Corner Sink Front

CSF36R*	327	361
CSF36L*	327	361
CSFFL36 (Floor)	153	153

*Requires 36″ x 36″ wall space.
*Requires Floor (sold separately)

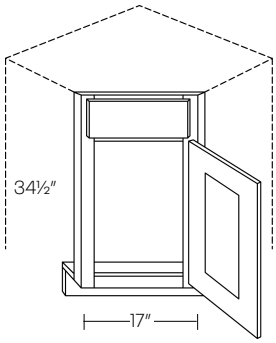

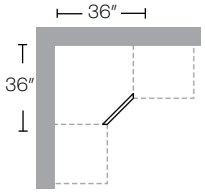

Carousel Corner Base Cabinet

Item Number	L	Z
CAR33R	1322	N/A
CAR33L	1322	N/A
CAR36R	1322	N/A
CAR36L	1322	N/A

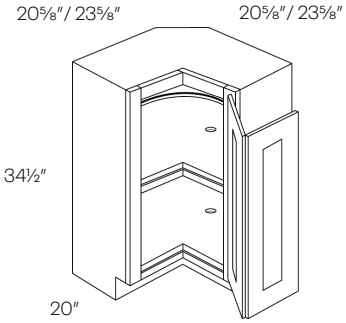

- Requires 33″ x 33″ / 36″ x36″ wall space
- Pie cut for 33″ is 9″ and for 36″ is 12″
- Wooden Lazy Susan

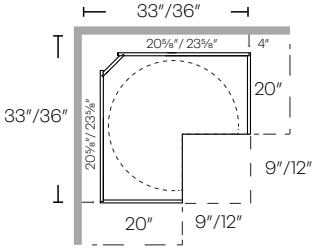

Lazy Susan

Item Number	L	Z
LS36R	1322	N/A
LS36L	1322	N/A

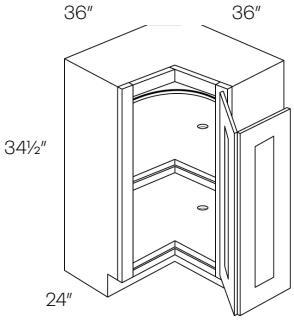

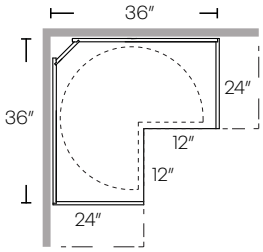

Easy Reach Corner Base Cabinet

ER36R	1234	N/A
ER36L	1234	N/A

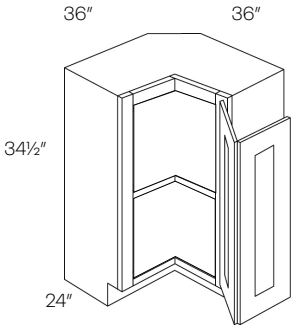

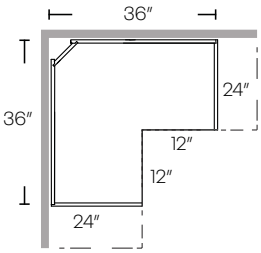

Diagonal Corner Sink Base Cabinet

CSB36R	1234	1265
CSB36L	1234	1265

- Requires 36″ x 36″ wall space

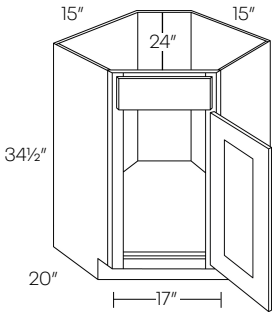

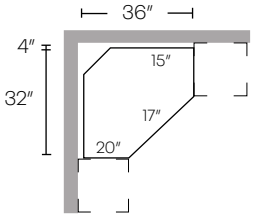

1 Drawer Front 1 Door Sink Base

SB21DL	571	585
SB21DR	571	585

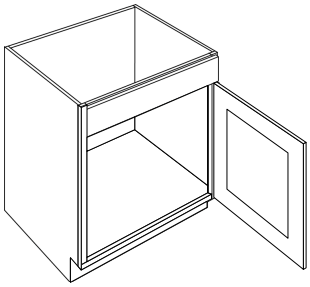

1 Drawer Front 2 Door Sink Base

SB24	602	617
SB27	647	663

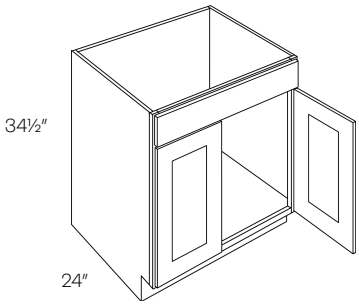

2 Drawer 4 Door Sink Base Cabinet

Item Number	L	Z
SB48	876	898

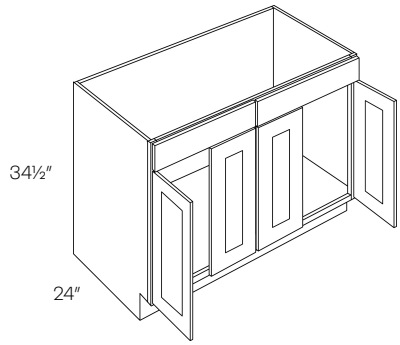

2 Drawer Front 2 Door Sink Base

Item Number	L	Z
SB30	685	702
SB33	726	744
SB36	744	763
SB39	762	781
SB42	779	798

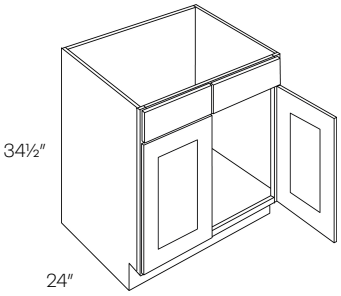

Combination Sink Base Cabinet

SB54	977	1001
SB60	1064	1091

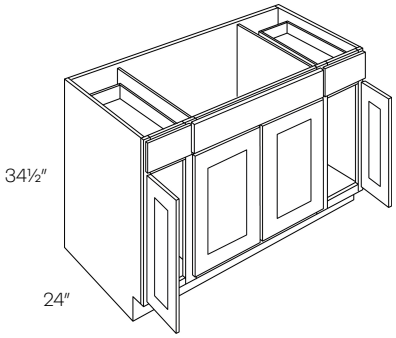

	Door	Sink	Door
SB54	12″	30″	12″
SB60	15″	30″	15″

Double Door Farm Sink Base Cabinet

SB36 - FS	685	N/A

- Max trimmable 33″ X 10″
- Trimming to be done in field
- Has a fixed platform

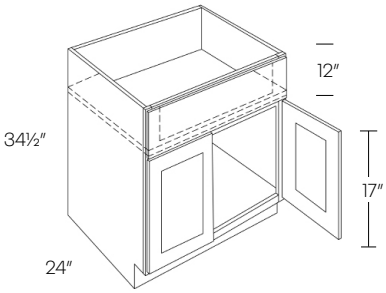

Microwave Base Cabinet

MCB24	600	N/A
MCB24-TRM	250	N/A
MCB27	645	N/A
MCB27-TRM	275	N/A
MCB30	685	N/A
MCB30-TRM	300	N/A

- MC front opening:
  MCB24 - 21″x16″
  MCB27 - 24″x16″
  MCB30 - 27″x16″

*Does not have finished interior

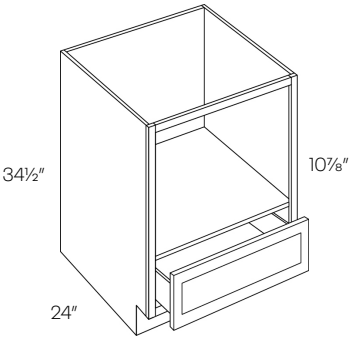

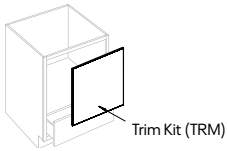

Angle Base End Cabinet

BTC2412	452	N/A

- Reversible
- Loose toe kick
- Hinged on 24″

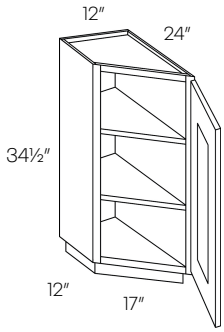

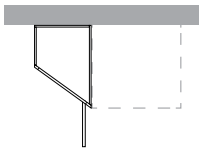

Base End Cabinet

Item Number	L	Z
BEC24	563	N/A

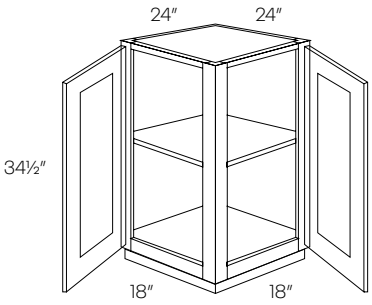

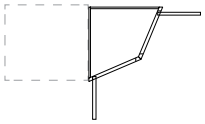

Base Spice Cabinet

Item Number	L	Z
BSP9	725	N/A

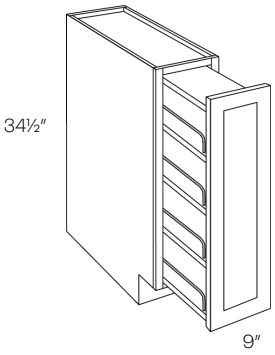

Waste Basket Cabinet

BWBK15 (1-B)	915	938
BWBK18 (2-B)	1013	1038

- Includes 35qt. waste basket (BK18 gets 2) and soft-close glides

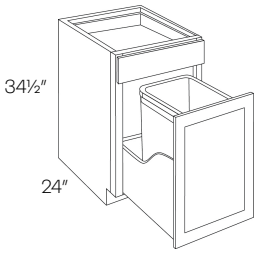

BWBK15

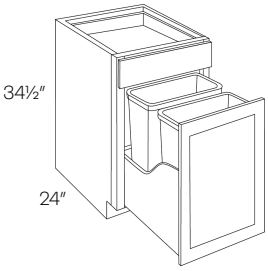

BWBK18

Full Height Waste Basket Cabinet

BWBK15-FH (1-B)	915	N/A
BWBK18-FH (2-B)	1013	N/A

- Includes 35qt. waste basket (BK18 gets 2) and soft-close glides

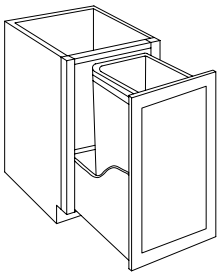

BWBK15

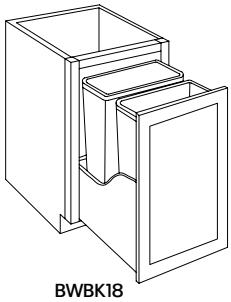

BWBK18

1 Door Base Cabinet

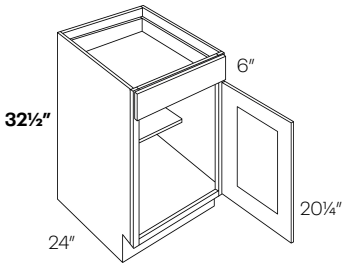

Item Number	L	Z
B9-HA	396	406
B12-HA	456	467
B15-HA	477	489
B18-HA	501	514
B21-HA	571	585

•10″ Deep Shelf
* Please note: Handicap Accessible cabinets may not meet ADA requirements

1 Drawer 2 Door Base Cabinet

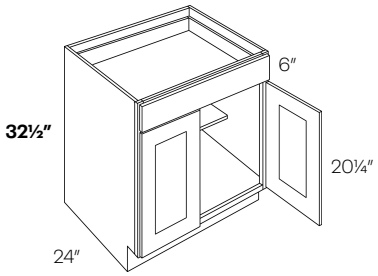

B24-HA	639	655
B27-HA	706	724

•10″ Deep Shelf
* Please note: Handicap Accessible cabinets may not meet ADA requirements

2 Drawer 2 Door Base Cabinet

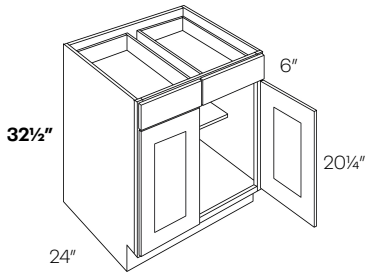

B30-HA	769	788
B33-HA	821	842
B36-HA	861	883
B39-HA	916	939

•10″ Deep Shelf
* Please note: Handicap Accessible cabinets may not meet ADA requirements

3 Drawer Base Cabinet

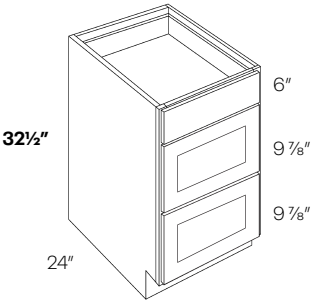

Item Number	L	Z
DB12-HA	705	723
DB15-HA	738	756
DB18-HA	761	780

* Please note: Handicap Accessible cabinets may not meet ADA requirements

Blind Base Cabinet

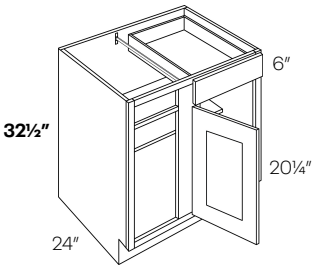

BLB36/39-HA	814	834

• Left blind shown
• Reversible Left or Right
• Must be pulled to the minimum position
* Please note: Handicap Accessible cabinets may not meet ADA requirements

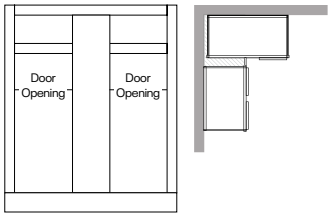

	Min Pull	Max Pull	Actual	Door	Door Opening
BLB36/39	36″	39″	27″	B9	6″

Lazy Susan Corner Base Cabinet

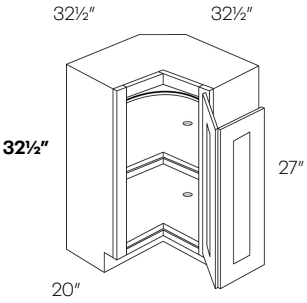

CAR36L-HA	1322	N/A
CAR36R-HA	1322	N/A

• Requires 36″ x 36″ wall space
* Please note: Handicap Accessible cabinets may not meet ADA requirements

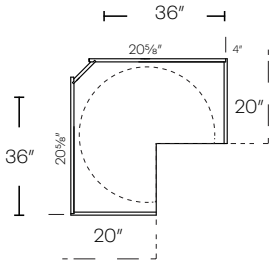

Removable Sink Insert

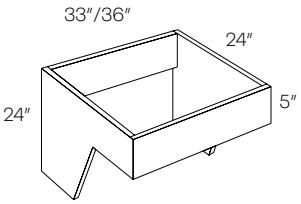

Item Number	L	Z
SB30-HR-INS	450	N/A
SB33-HR-INS	500	N/A
SB36-HR-INS	550	N/A

*HR=Handicap Removable
* Please note: Handicap Removable cabinets may not meet ADA requirements

Side profile

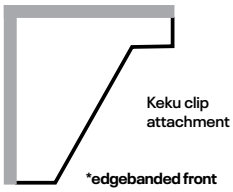

2 Door Removable Sink Base Cabinet

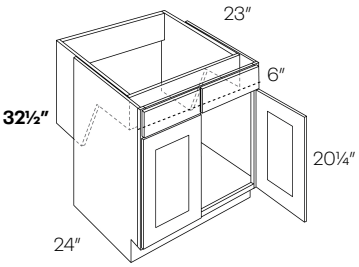

Item Number	L	Z
SB30-HR	1070	1108
SB33-HR	1081	1108
SB36-HR	1103	1131

*HR=Handicap Removable
* Please note: Handicap Accessible cabinets may not meet ADA requirements

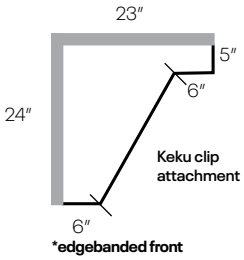

Removable Vanity Base

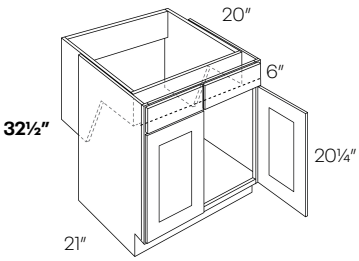

Item Number	L	Z
V30-HR	700	718
V33-HR	876	898
V36-HR	926	949

*HR=Handicap Removable
* Please note: Handicap Accessible cabinets may not meet ADA requirements

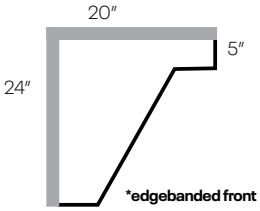

1 Door Vanity Sink Base Cabinet

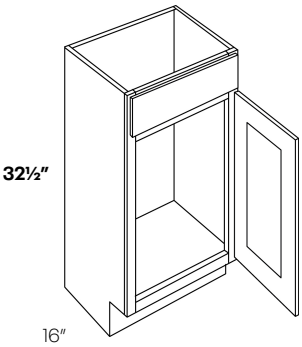

Item Number	L	Z
V1816-HA	300	308

•Available in White only
•HA=Handicap Accessible
* Please note: Handicap Accessible cabinets may not meet ADA requirements

2 Door Vanity Sink Base Cabinet

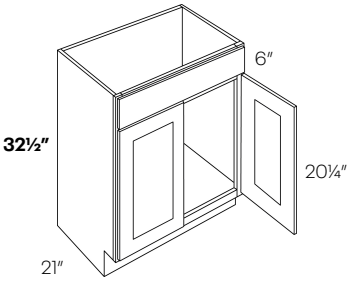

Item Number	L	Z
V21-HA*	377	396
V2418-HA	390	400
V24-HA	400	410
V30-HA	516	529
V36-HA	623	639

•V21- HA & V2418-HA available in White only
•HA=Handicap Accessible
* Please note: Handicap Accessible cabinets may not meet ADA requirements

Vanity Drawer Base Cabinet - Handicap Accessible

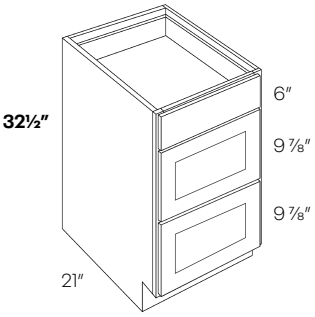

Item Number	L	Z
VDB12-HA	680	697
VDB15-HA	719	737
VDB18-HA	735	753

*HA=Handicap Accessible
* Please note: Handicap Accessible cabinets may not meet ADA requirements

Item Number	L
UC1821X84	1521
UC1824X84	1521
UC1824X90	1734
UC1824X96*	1979
POS18-3 (factory installed)	954
POS18-4 (factory installed)	1198

Single Door Utility Cabinet

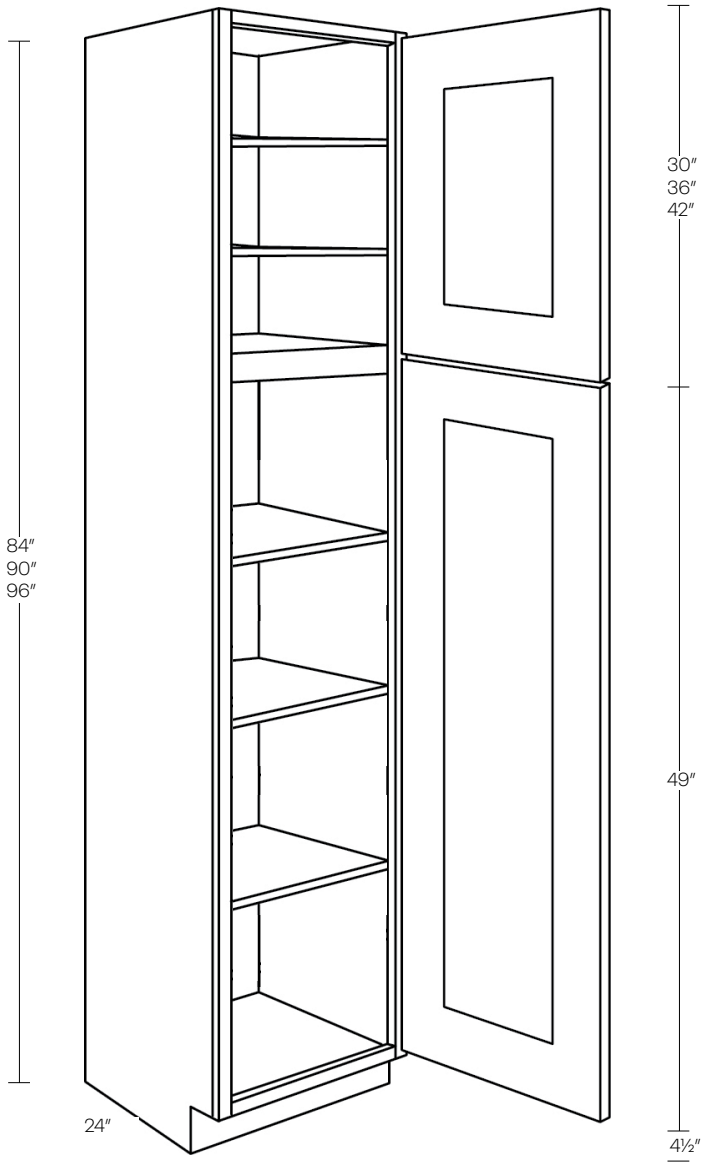

- 3 bottom adjustable shelves
- 84″ and 90″ have 2 upper shelves
- 96″ has 3 upper shelves

Pull Out Shelf

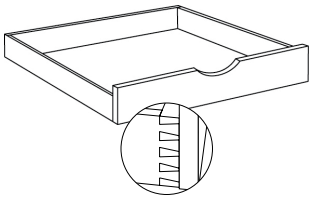

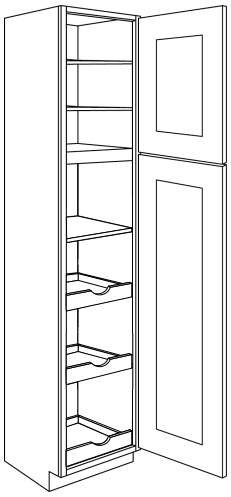

POS-3

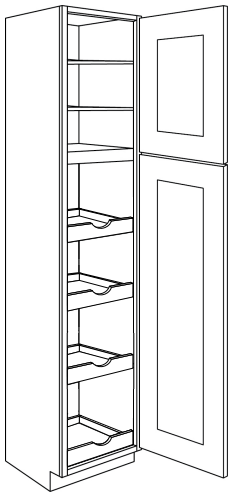

POS-4

Double Door Utility Cabinet

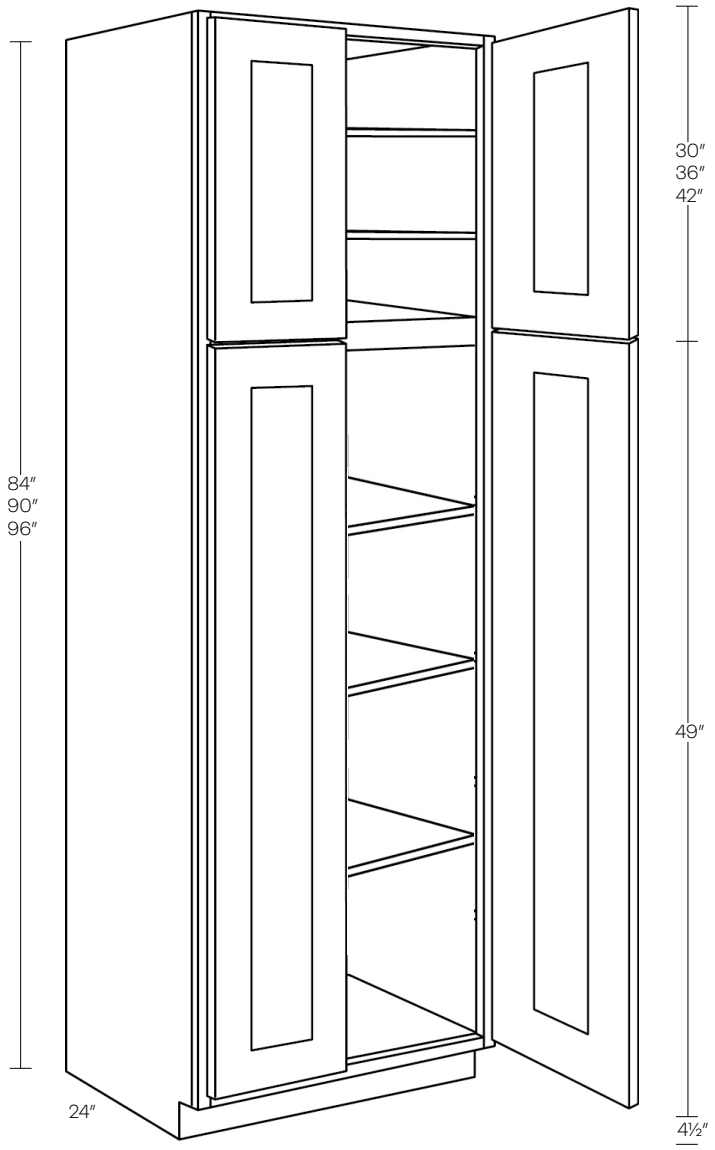

Item Number	L
UC2424X84	1752
UC2424X90	2000
UC2424X96*	2212
UC3024X84	1840
UC3024X90	2100
UC3024X96*	2323
POS24-3 (factory installed)	1088
POS24-4 (factory installed)	1377
POS30-3 (factory installed)	1100
POS30-4 (factory installed)	1389

- 3 bottom adjustable shelves
- 84″ and 90″ have 2 upper shelves
- 96″ has 3 upper shelves

Pull Out Shelf

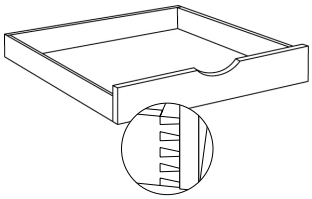

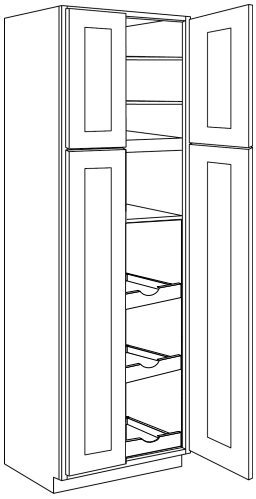

POS-3

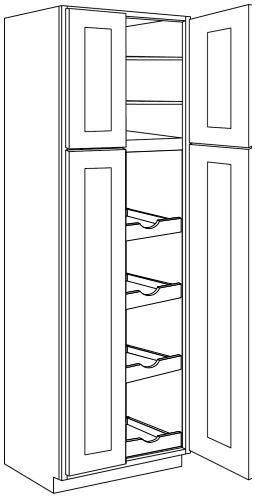

POS-4

Double Door Oven Cabinet

Item Number	L	Z
OV3084	1654	N/A
OV3090	1904	N/A
OV3096*	2153	N/A
OV3384	1690	N/A
OV3390	1942	N/A
OV3396	2189	N/A
OV30-TRM	350	N/A
OV33-TRM*	370	N/A

- For double ovens, remove drawer floor as needed
- Trim kit is 3/4″ thick and includes solid edgeband
- 84″ and 90″ has 1 upper shelf
- 96″ has 2 upper shelves

Side - Field Modified
*for double oven, remove fixed shelf and bottom two 12″ drawers in field

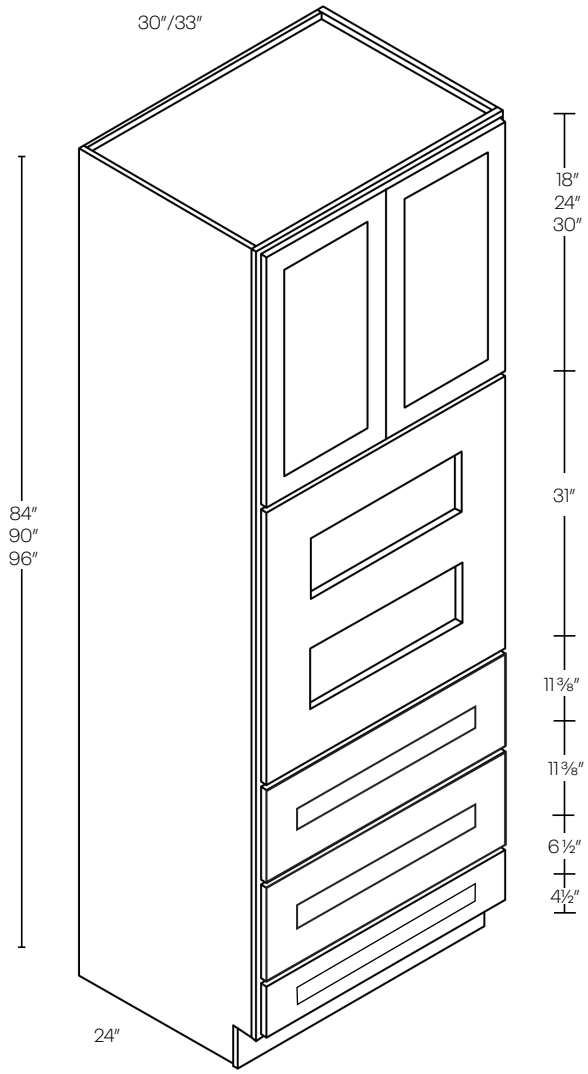

Assembly

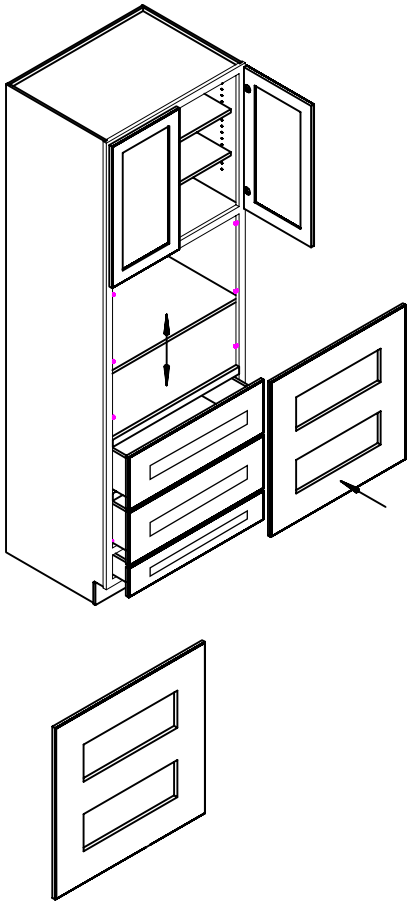

OV30-TRM/OV33-TRM

Side

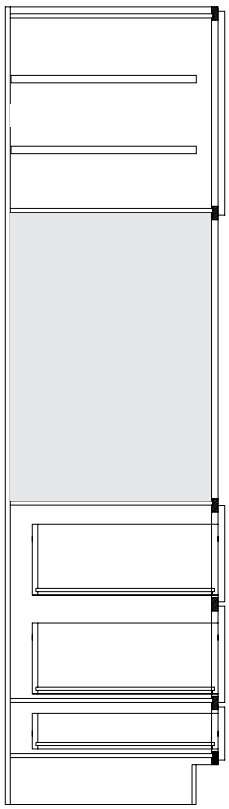

Double Oven Cabinet

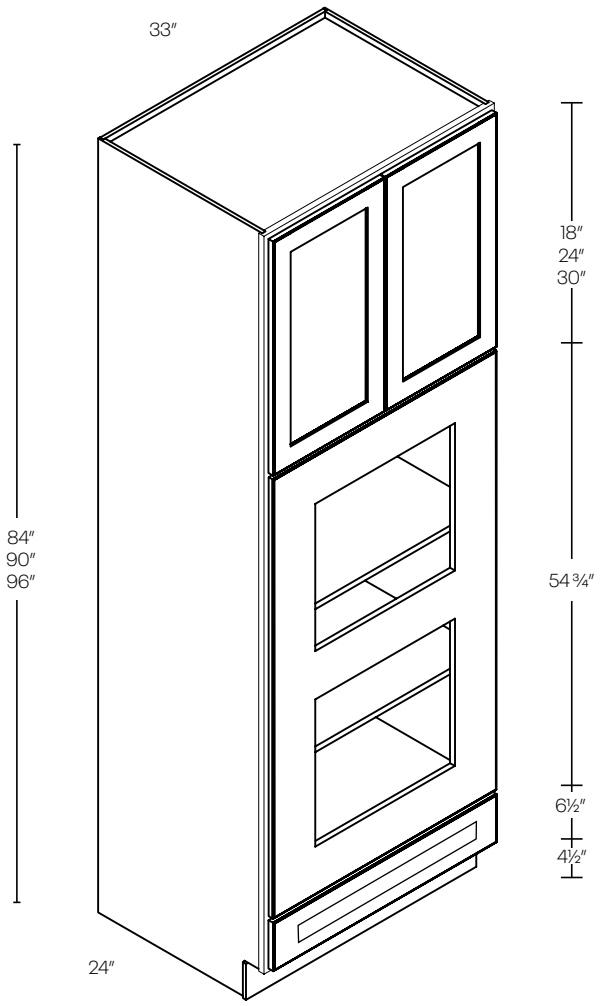

Item Number	L	Z
OVD3084	1594	N/A
OVD3090	1841	N/A
OVD3096*	2091	N/A
OVD30-TRM	500	N/A
OVD3384	1690	N/A
OVD3390	1942	N/A
OVD3396*	2198	N/A
OVD33-TRM	540	N/A

- 84″ and 90″ has 1 upper shelf
- 96″ has 2 upper shelves

Assembly

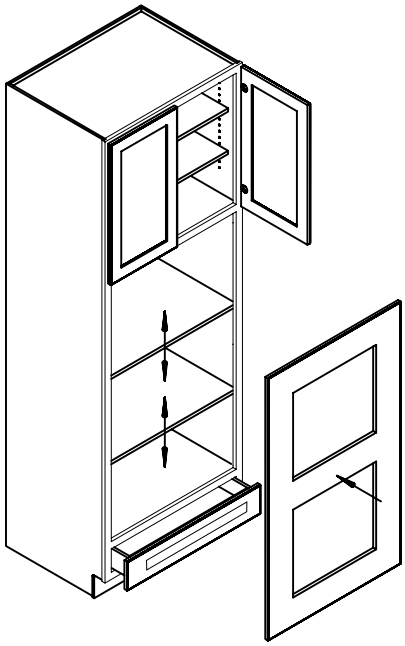

Side

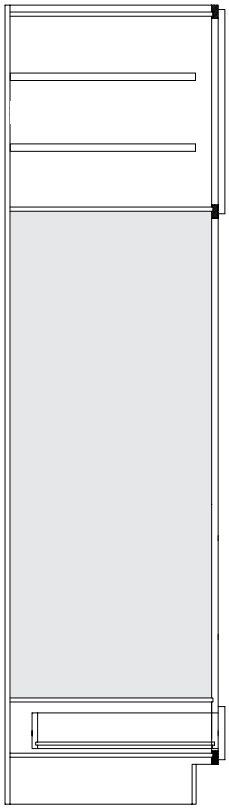

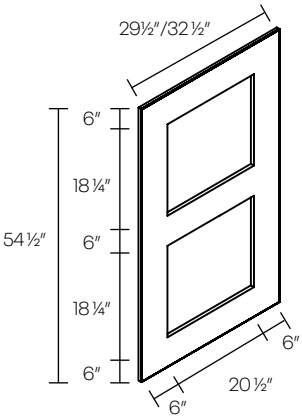

OVD30-TRM/OVD33-TRM

Pull Out Shelf

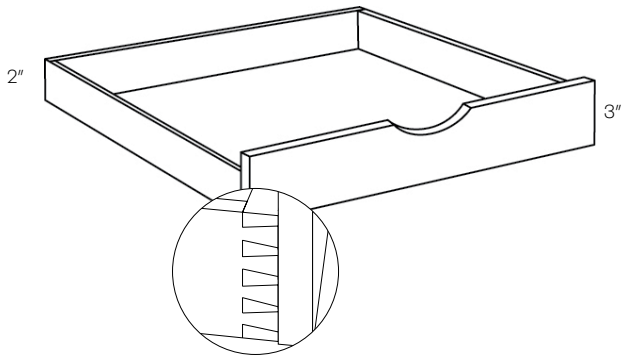

Item Number	L
POS12	198
POS15	207
POS18	228
POS21	240
POS24	271
POS27	282
POS30	294
POS33	307
POS36	329
POS42	345

- Natural finish
- Ball bearing soft-close glides included
- POS uses dovetail construction

Floating Shelves

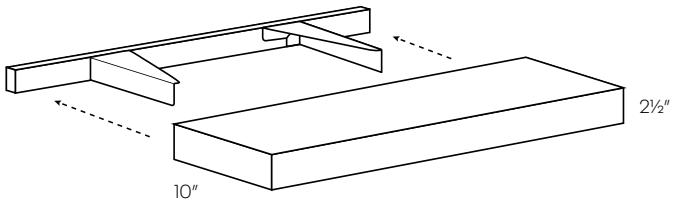

F-SHELF-24	483
F-SHELF-30	576
F-SHELF-36	668
F-SHELF-42	760

- Mounting hardware included

Wooden Cutlery Divider

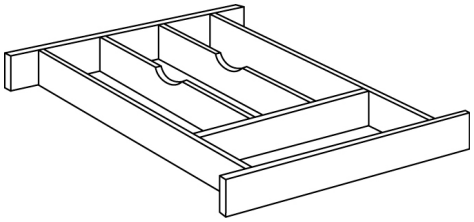

WCD-14	202
WCD-16	215
WCD-25	223
WCD-7	242

- To be trimmed on site

* Need to buy 2 pieces

WCD-14	B33*, B39*, BLB48/51
WCD-16	B15, B18, B21, B36*
WCD-25	B24, B27, DB30
WCD-7	B12, BLB39/42

Item Number	L
WHT30	2500
WHT36	3000

•Metal Liners Included

Traditional Wood Hood

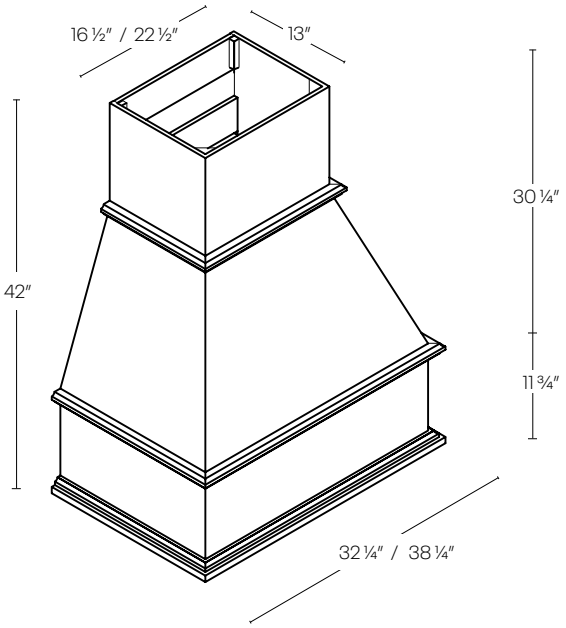

30″ Hood Liner

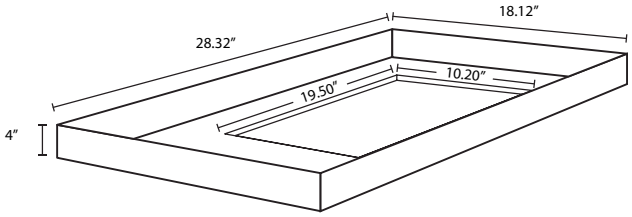

36″ Hood Liner

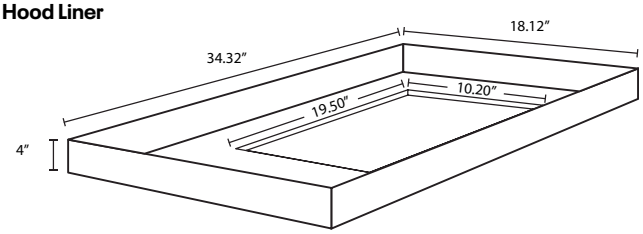

	Item Number	L	Z
1 Door Vanity Sink Base Cabinet	**V1816**	307	315

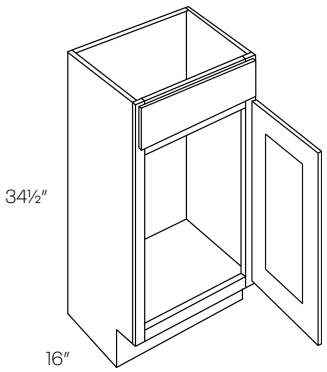

1 Door Vanity Base Cabinet	**VB12**	437	448
	VB15	458	469
	VB18	480	492

• Cabinet has a shelf

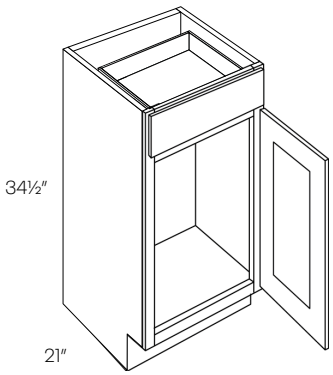

Vanity Drawer Base Cabinet	**VDB12**	699	716
	VDB15	741	760
	VDB18	759	778
	VDB21	772	791
	VDB24	796	816

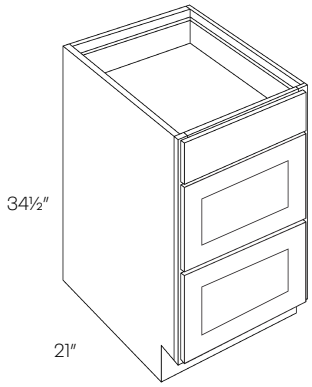

2 Door Vanity Sink Base Cabinet

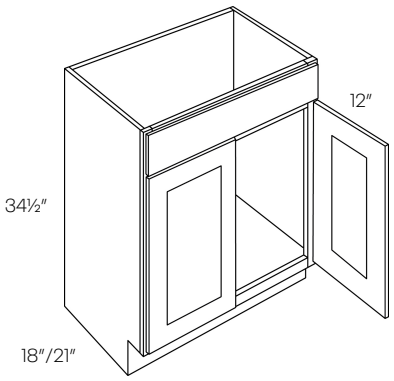

Item Number	L	Z
V2418	394	404
V3018	501	514
V24	427	438
V27	472	484
V30	532	545
V33	588	603
V36	643	659
V42	746	765

4 Door Vanity Sink Base Cabinet

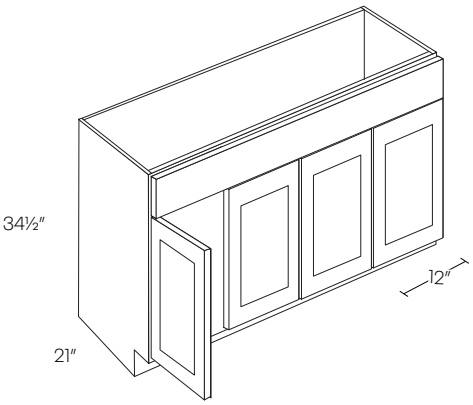

V48	895	917

2 Drawer Vanity Sink Base Cabinet

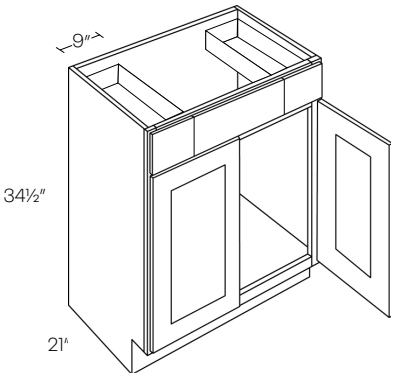

VSB36	784	804
VSB42	840	861

• Top side drawers are 9″

3 Door Vanity Base Cabinet

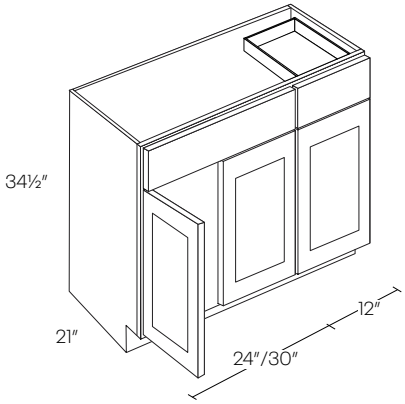

Item Number	L	Z
VB36	947	971
VB42	958	982

• Drawer on right side only

1 Door 2 Drawer Vanity Sink Base Cabinet

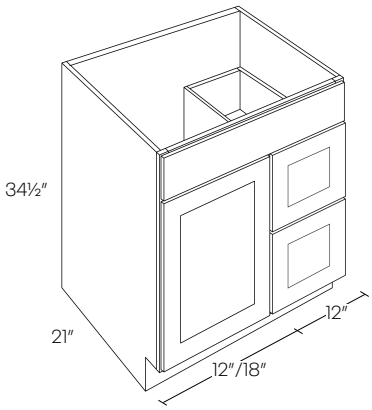

V24DL	640	656
V24DR	640	656
V30DL	884	906
V30DR	884	906

• DR shown in picture

2 Door 2 Drawer Vanity Sink Base Cabinet

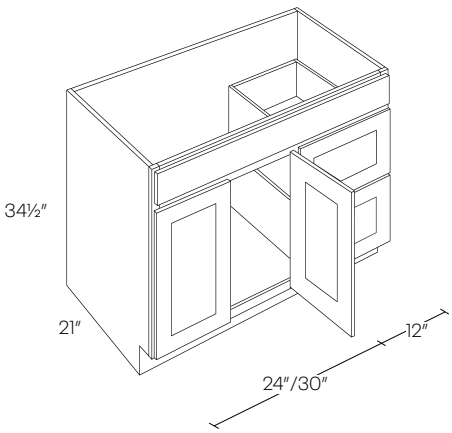

V36DL	952	976
V36DR	952	976
V42DL	966	990
V42DR	966	990

• DR shown in picture

	Item Number	L	Z
2 Door 4 Drawer Vanity Sink Base Cabinet	**V48DD**	1104	1132

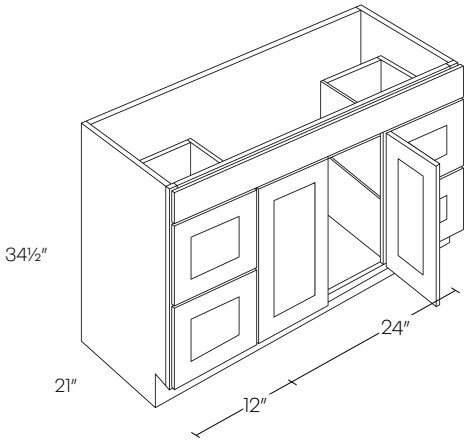

4 Door Vanity Base Cabinet	**VB48**	1092	1119
	VB54	1150	1179
	VB60	1203	1233

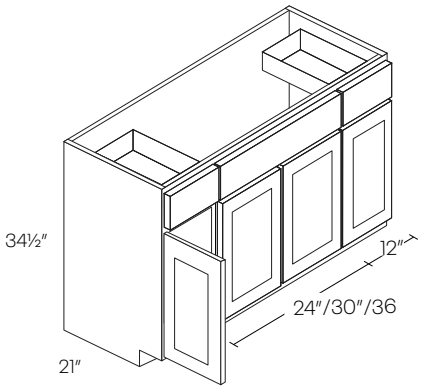

Vanity Drawer Base Cabinet	**V60DD**	1340	1374

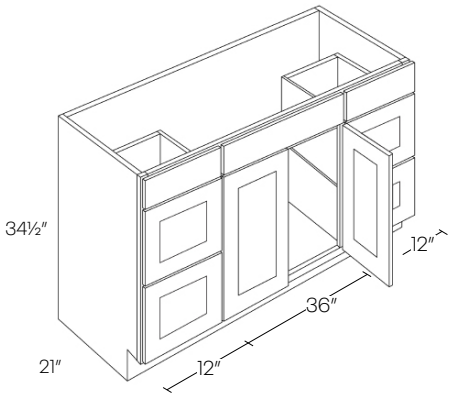

	Item Number	L	Z
Vanity Drawer Base Cabinet	**VSD60**	1276	1308

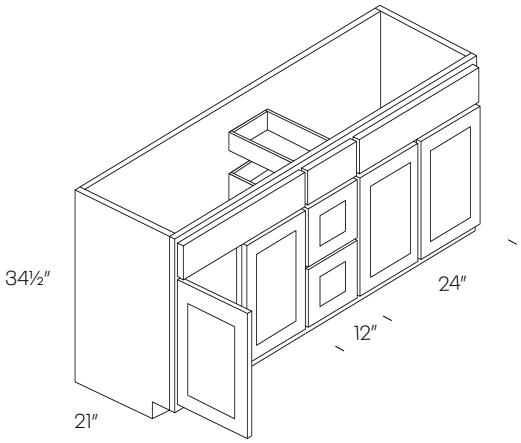

Single Door Medicine Cabinet	**MC1830**	294	N/A

• Mirrored front
• Finished side

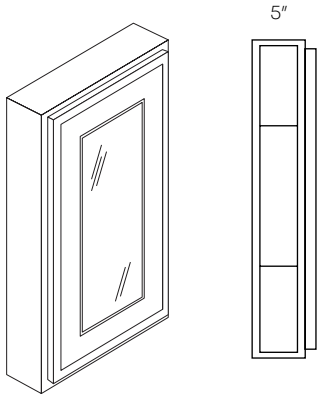

Double Door Medicine Cabinet	**MC2430**	527	N/A
	MC3030	586	N/A
	MC3630	661	N/A

• Mirrored front
• Finished side

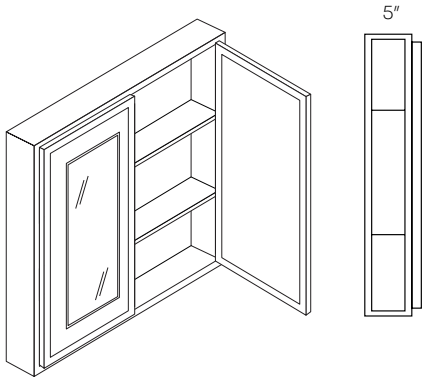

Desk Drawer

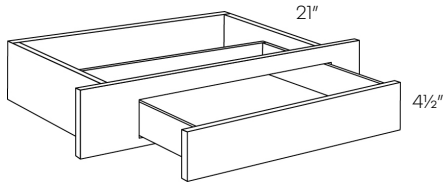

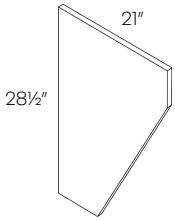

Item Number	L	Z
DD30	319	N/A
DS	203	N/A

- DS is 21″
- 2 ½″ trimmable sides
- Drawer front is 22 ½″ wide
- Slab drawer front

Item Number	L

Refrigerator End Panel

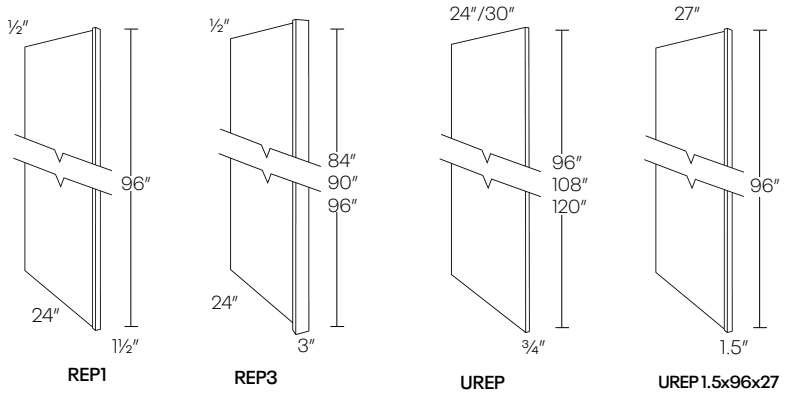

REP196	518
REP384	470
REP390	494
REP396	518
UREP24	361
UREP30	480
UREP24-9	406
UREP30-9	540
UREP24-10	457
UREP30-10	608
UREP1.5x96x27	540

Finished Skin

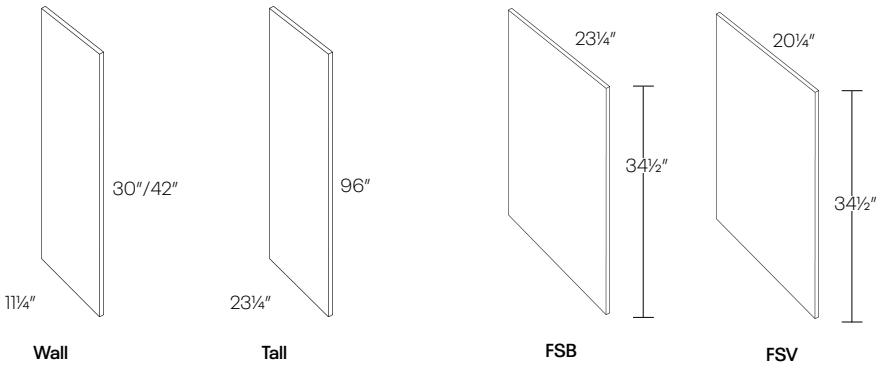

FS30	107
FS42	149
FS9624	283
FSB	139
FSV	139

• ¼″ Thick

Plywood Panel

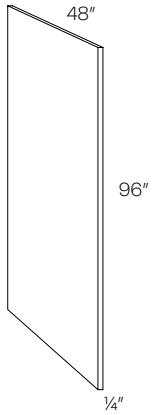

PLY4X8	410

Item Number	L
DWR1	236
DWR3	272
DWR6	302
BEP	238

Base End Panel

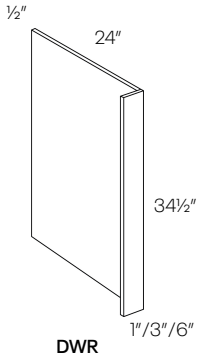

DWR

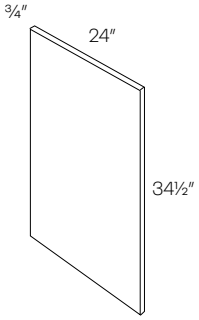

BEP

F330	52
F630	89
F342	68
F642	120
F396	160
F696	265

- Fillers finished on all 4 sides

Fillers

F330/F630/F342/F642

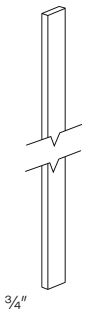

F396/F696

Item Number	L
RCRM	397
RCRMS	397
RCRMC	397
RCRMR	397

• 8 feet long

Royal Crown Molding

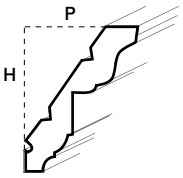

RCRM
Height: 3½″
Projection: 2½″

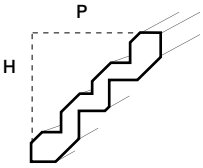

STEP
RCRMS
Height: 3⅛″
Projection: 3⅛″

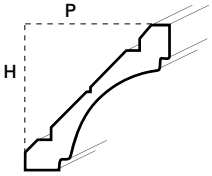

COVE
RCRMC
Height: 3⅛″
Projection: 3⅛″

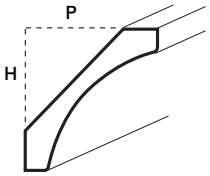

ROUND
RCRMR
Height: 3 ¼″
Projection: 3 ¼″

OCM	107
OCM135	107
ICM	107

• 8 feet long

Corner Molding

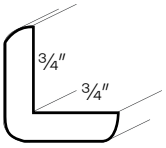

OCM

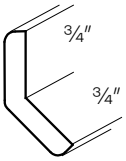

OCM135

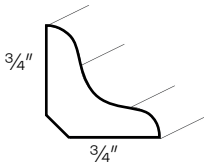

ICM

CRM	141
CRMS	141

• 8 feet long

Crown Molding

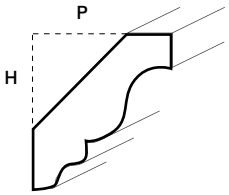

CRM
Height: 2″
Projection: 2″

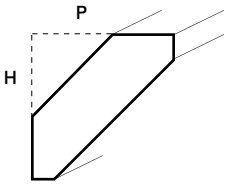

CRMS
Height: 2″
Projection: 2″

Item Number	L

Shoe Molding

SHM	119

- 8 feet long

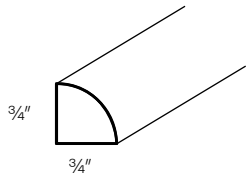

Scribe / Batten Molding

SCM	87
BAT	87

- 8 feet long

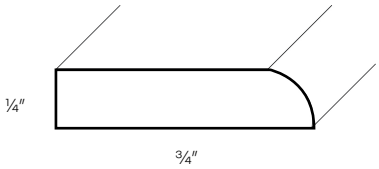

SCM

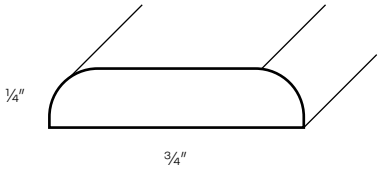

BAT

Light Rail Molding

LTRM	275
LTRMS	275
LTRM1	207

- 8 Feet long

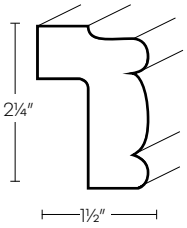

LTRM

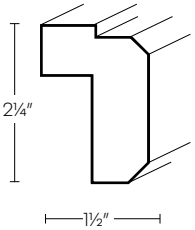

LTRMS

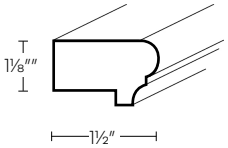

LTRM1

Item Number	L

Large Post

POST5-C	887

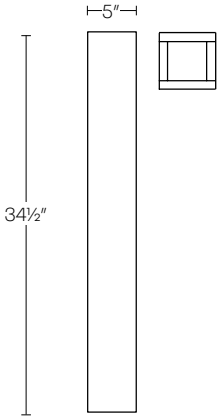

Corbel

CBS6	100
CBS10	139

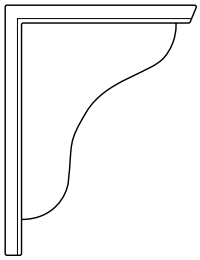

	W	D	H
CBS6	3″	3½″	6½″
CBS10	3″	7½″	10½″

Column

CLM-B30 (34½″H X 30″D)	451
CLM-30X15 (30″H X 15″D)	228
CLM-36X15 (36″H X 15″D)	255
CLM-42X15 (42″H X 15″D)	283

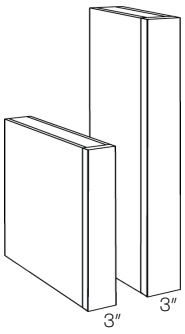

- Depth is Trimmable
- Finished 3 sides

Item Number	L

Base Molding

BSMS	283

• 8 feet long

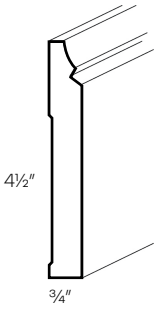

Toe Kick

TKS	89

• 8 feet long

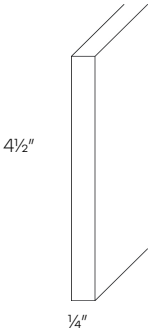

Touch Up Kit / Stain

TUP	100
TUP-PINT	118
CHW-LUX-CARE	15
CHW-UNI-AERSOL-SPRAY	100

• TUP-PINT is one pint available in all finishes
*Must purchase TUP-PINT with Aerosol Spray

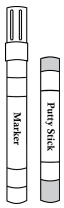

TUP

TUP-PINT

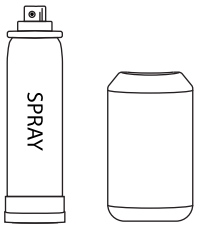

CHW-UNI-AERSOL-SPRAY

Modifications & Upgrades

Luxor Collection

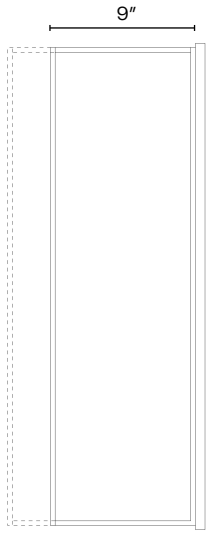

Wall Cabinet

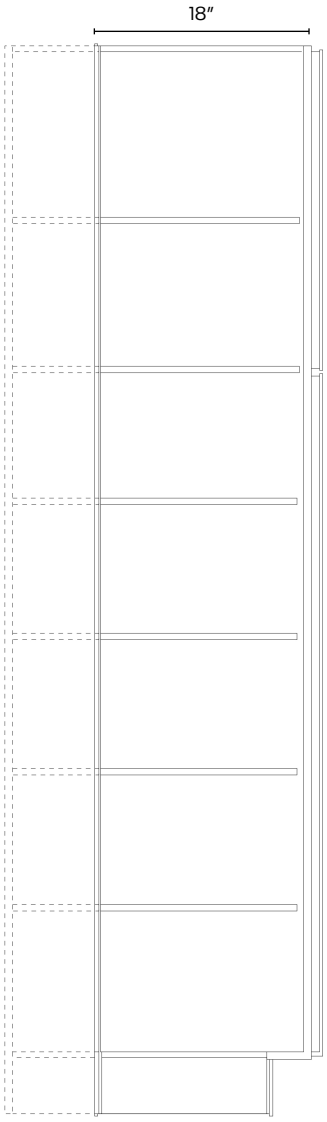

Tall Cabinet

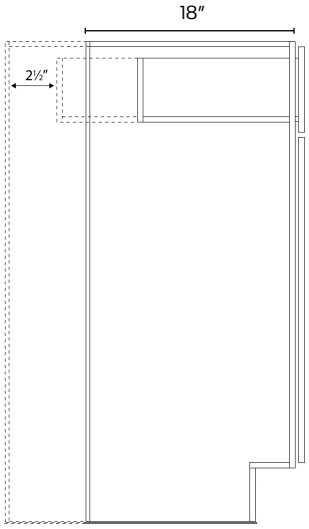

Base Cabinet

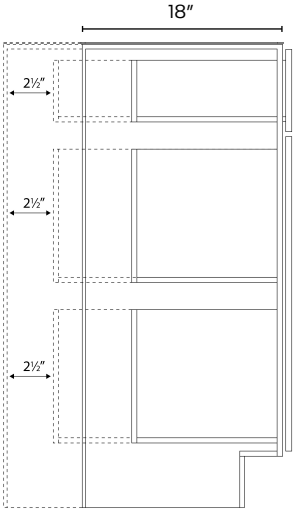

Drawer Base Cabinet

*Dovetail not in back

Cut Down Depth	Description	List Price
CT-BCUT *	Base cabinet, cut down depth	400
CT-DBCUT*	Drawer base cabinet, cut down depth	500
CT-TCUT*	Tall cabinet, cut down depth	500
CT-WCUT**	Wall cabinet, cut down depth	400

*Can be cut down to 9″, 12″, 15″, 18″ & 21″ | **Can be cut down to 6″, 9″ & 11″
*All 9″ Base Cabinets will have a dummy drawer front

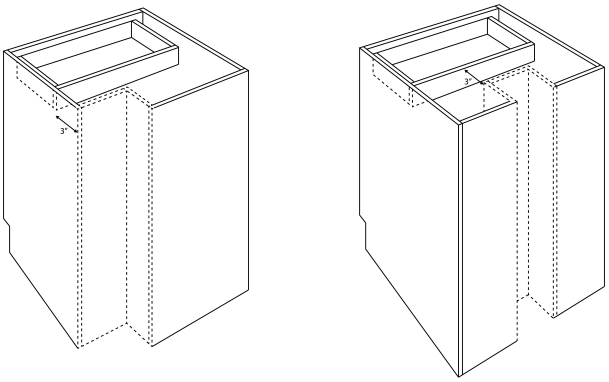

Base Cabinet

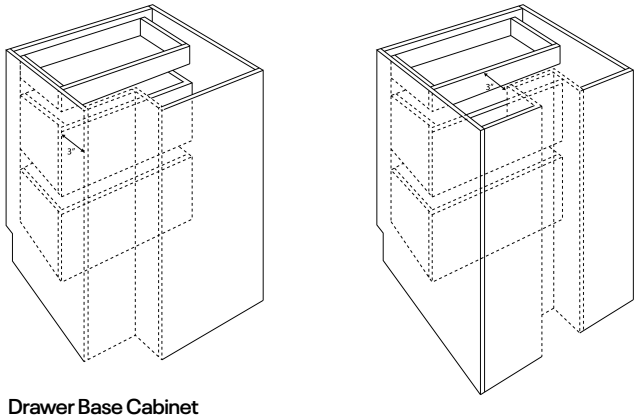

Drawer Base Cabinet

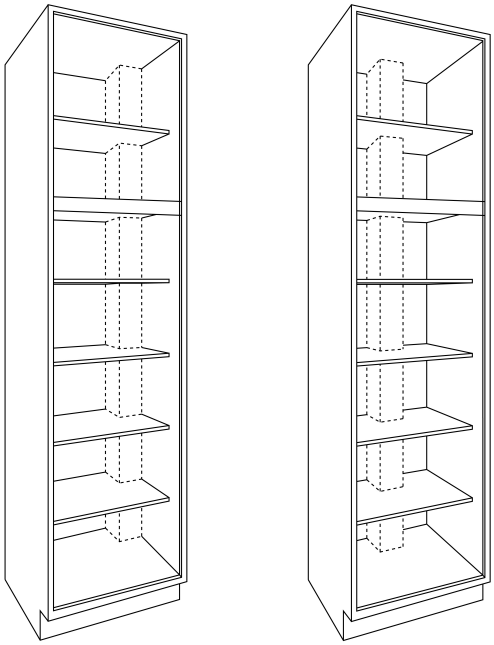

Tall Cabinet

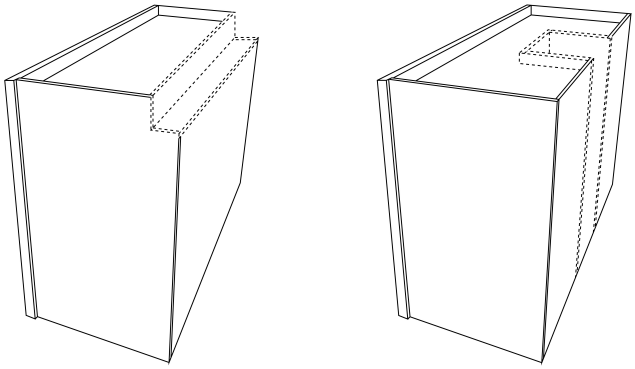

Wall Cabinet

Chase Cuts	Description	List Price
CT-BCHASE	Base cabinet, chase cut	700
CT-DBCHASE	Drawer base cabinet, chase cut	900
CT-TCHASE	Tall cabinet, chase cut	900
CT-WCHASE	Wall cabinet, chase cut	600

•Non-stock cabinets, parts including doors and drawets, custom modifications, wood hoods and countertops (post form and self-edge) are not returnable.
•Must provide accurate drawings with your order

Item	Description	List Price

Door cut for glass

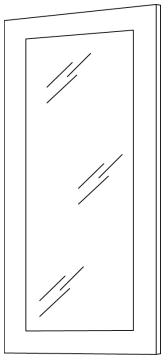

CT-DCG	Door cut for glass	205
CT-DCG-GLI	Door cut and insert glass	381
CT-GLI	Glass Insert	197

•Only Wall Cabinets can be cut for glass
•Loose glass not for sale
*Per door cost shown above

Toe Kick

CT-HANDICUT	Base cabinet, cut off toe kick	116
CT-HANDICUTSHIP	Base cabinet, cut off toe kick and ship	200

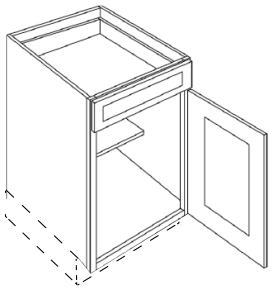

CT-HANDICUT

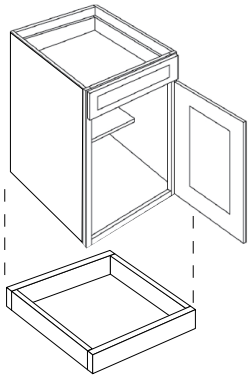

CT-HANDICUTSHIP

Wall

CT-EXDW	Extended depth wall	806

• Can only be extended to 15", 18", 21" & 24"

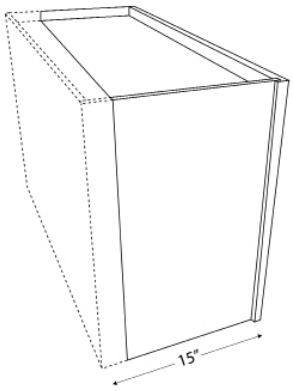

Item	Description	List Price

Luxor Full Depth Shelf

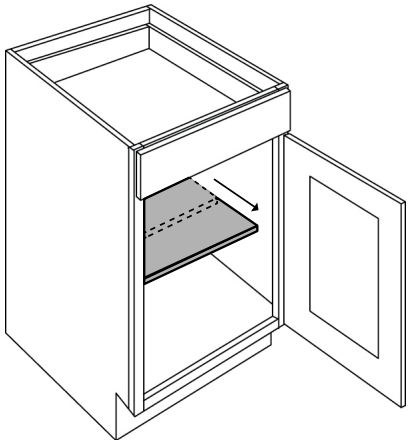

CT-SHELF-FD-B9	Full Depth Shelf	7
CT-SHELF-FD-B12	Full Depth Shelf	9
CT-SHELF-FD-B15	Full Depth Shelf	11
CT-SHELF-FD-B18	Full Depth Shelf	14
CT-SHELF-FD-B21	Full Depth Shelf	15
CT-SHELF-FD-B24	Full Depth Shelf	17
CT-SHELF-FD-B27	Full Depth Shelf	20
CT-SHELF-FD-B30	Full Depth Shelf	23
CT-SHELF-FD-B33	Full Depth Shelf	27
CT-SHELF-FD-B36	Full Depth Shelf	30
CT-SHELF-FD-B39	Full Depth Shelf	34
CT-SHELF-FD-B42	Full Depth Shelf	37
CT-SHELF-FD-B48	Full Depth Shelf	40

Finished Interior

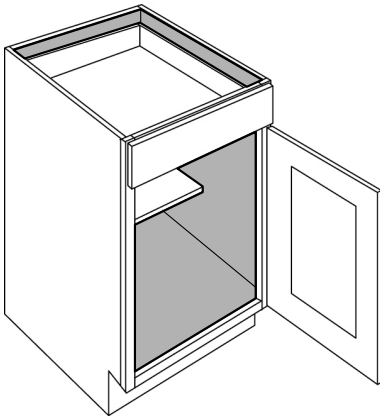

CT-FINISH-B	Finished Interior - Base Cabinet	450
CT-FINISH-W	Finished Interior - Wall Cabinet	450
CT-FINISH-T	Finished Interior - Tall Cabinet	800

• Drawers will not be finished

Recessed Toe Kick

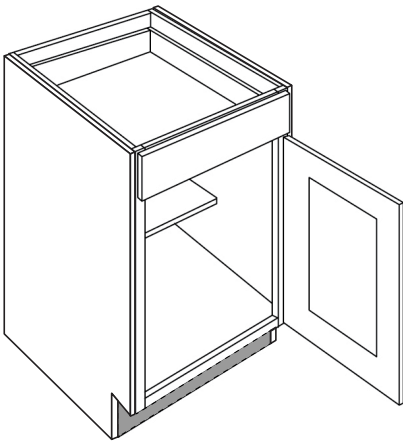

CT-TK-REDUCE	Recessed Toe Kick	800

• Must specify front, left, right dimensions

Front View - Toe Kick

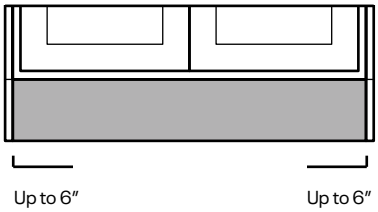

Item	Description	List Price
CT-TKFLUSH	Flush Toe Kick	600

Flush Toe Kick

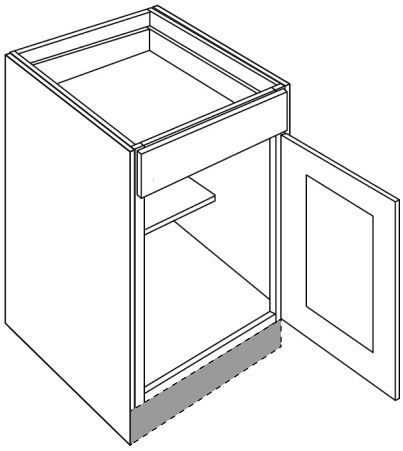

Front View - Toe Kick

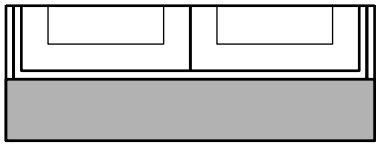

CHARGE-SINK BASE	Base to Sink Base	210

Base Cabinet to Sink Base

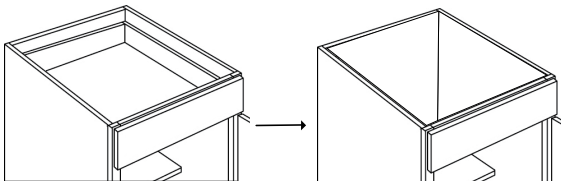

CT-TD-REDUCE	Reduce Depth of Top Drawer	120

• Can be cut down to 9″, 12″, 15″, 18″ & 21″

Reduced Top Drawer

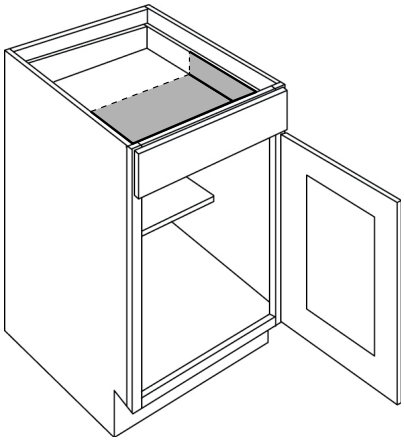

Cabinet & Door Information

Country Collection

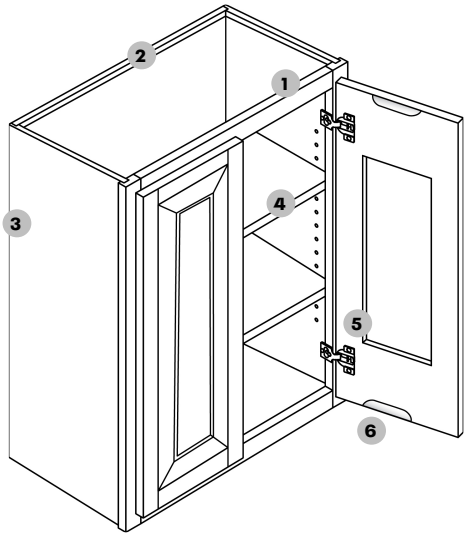

1. **Frame** — ¾″ thick, 1½″ wide, kiln-dried solid hardwood. Assembled with glue and nails, under clamp pressure, which ensures squareness.
2. **Back panel** — ½″ substrate, with 3″ plywood surrounding frame,made of 1/2″ plywood. Rabbeted and stapled into cabinet sides, screwed into top and bottom. Includes 1½″ hanging rails.
3. **End panel** — Top and bottom 1/2″ plywood substrate, with light maple woodgrain laminate finish.
4. **Shelves** — ¾″ thick, plywood; fully adjustable
5. **Hinges** — Heavy duty steel concealed adjustable hinge.
6. **Doors** — Finger pull groove for easy access

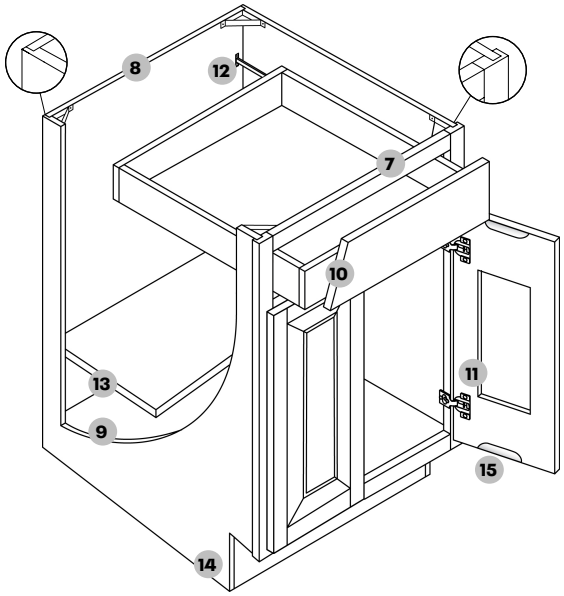

7. **Base frame** — ¾″ thick, 1½″ wide, kiln-dried solid hardwood. Assembled with glue and nails, under clamp pressure, which ensures squareness.
8. **Back panel** — ½″ substrate plywood material. Rabbeted and stapled into cabinet sides, screwed into top and bottom.
9. **End panel** — ½″ plywood substrate, with light maple woodgrain laminate interior finish.
10. **Drawers** — ½″ Plywood sides with ⅜″ thick bottom fastened with screws
11. **Hinges** — Heavy duty steel concealed adjustable hinge.
12. **Glides** — High quality epoxy coated steel side mounted glides.
13. **Shelves** — ¾ thick, plywood; fully adjustable. (10″ deep)
14. **Toe kick** — 4 ½″ Toe kick with 2 ½ ″ inset on all standard base and vanity cabinets.
15. **Doors** — Finger pull groove for easy access

Standard Overlay

1″ Reveal

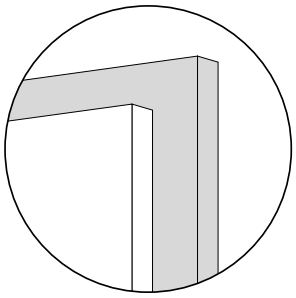

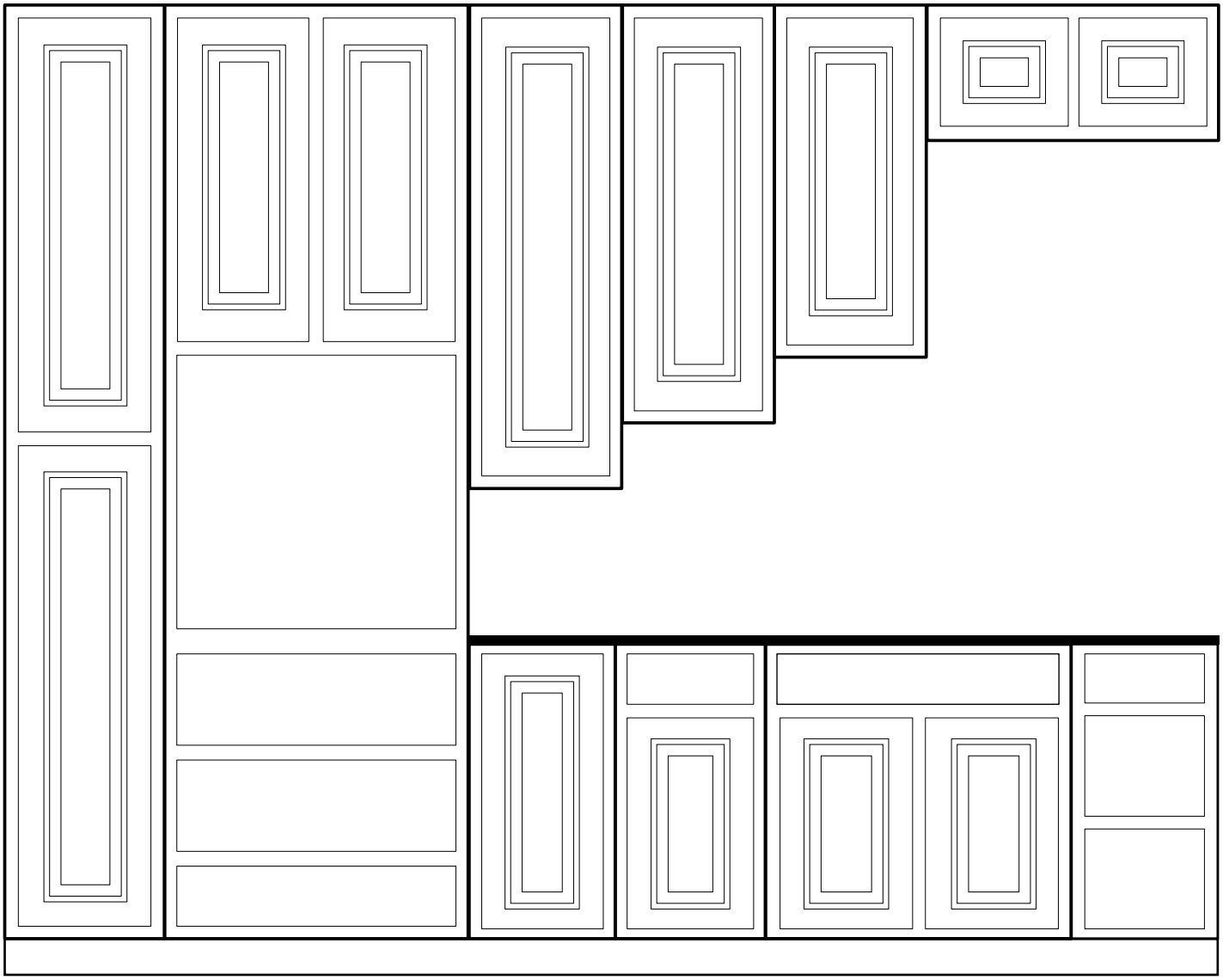

Country Oak

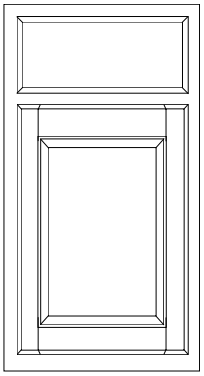

A standard 1" reveal, 5 piece solid wood with a raised MDF veneer center panel Mortise and Tenon construction, slab drawer front. solid wood in a Honey finish.

Finish	Price Code (Slab)
C4 - Honey (Stain)	R

Specifications & Pricing

Country Collection

	Item Number	R
12″ High Wall Cabinet	**3012**	323
	3312	334
	3612	362

• No Shelf

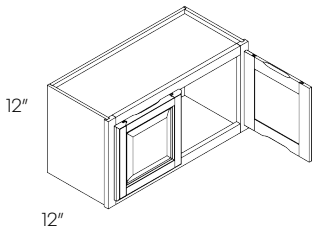

15″ High Wall Cabinet	**2415**	320
	3015	329
	3315	344
	3615	362

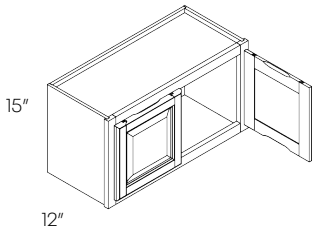

15″ High, 24″ Deep Wall Cabinet	**3015X24**	441
	3615X24	491

• No Shelf
*Has one shelf

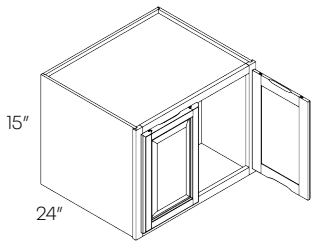

18″ High Wall Cabinet

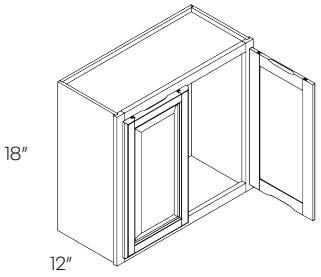

Item Number	R
2118 (1 Door)	302
2418	320
3018	332
3318	360
3618	414

• No Shelf

24″ High Wall Cabinet

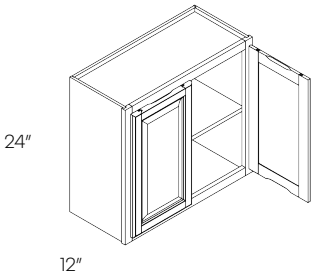

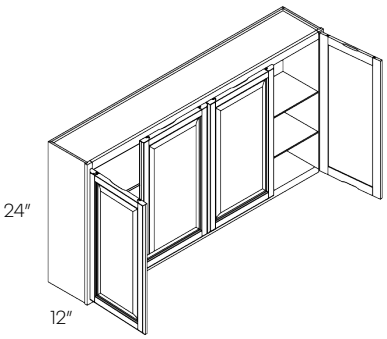

4824

1824 (1 Door)	342
2424	452
2724	458
3024	471
3324	488
3624	523
4224	623
4824 (4 Doors)	696

24″ High, 24″ Deep Wall Cabinet

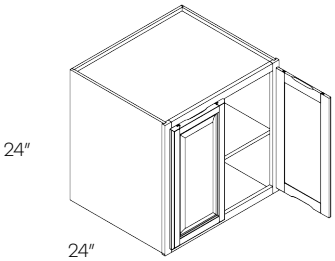

3024X24	613
3624X24	708

30″ High 1 Door Wall Cabinet

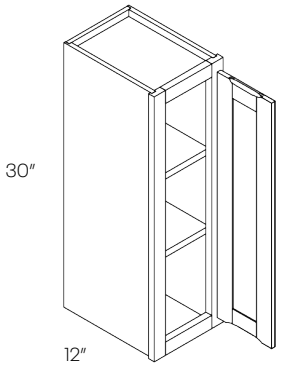

Item Number	R
930	260
1230	289
1530	312
1830	351
2130	419

30″ High 2 Door Wall Cabinet

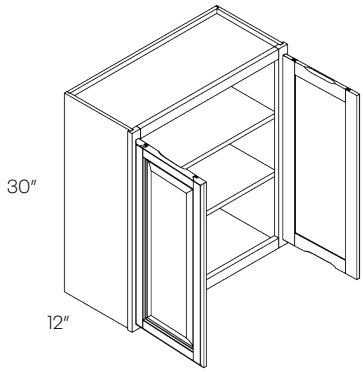

2430	447
2730	493
3030	504
3330	549
3630	584
3930	632
4230	670

30″ High 4 Door Wall Cabinet

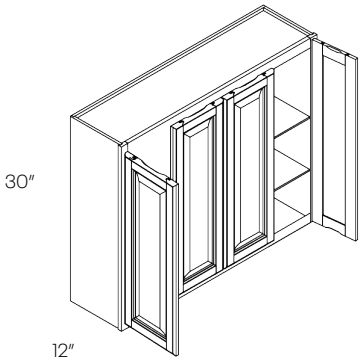

4830	759
5430	849

Item Number	R

30″ High Open Wall Cabinet

6030-O	866

• Opening Natural Interior Finish

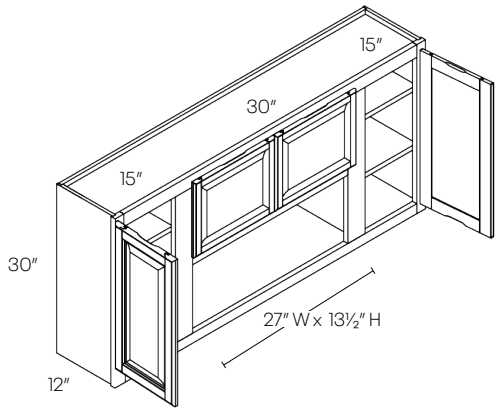

30″ High Blind Wall Cabinet

BLW27/3030	637
BLW36/3930	762
BLW39/4230	832
BLW42/4530	913

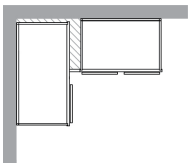

• Reversible L or R
• Can be installed at actual size

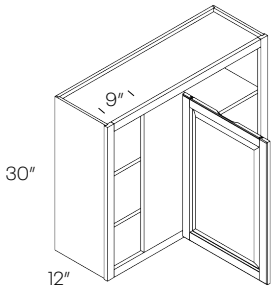

BLW27/BLW36

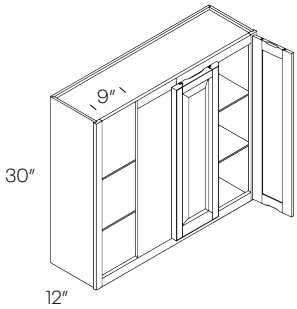

BLW39/BLW42

Cabinet	Min. Pull	Max. Pull	Actual Size	Door(s)	Door Opening
BLW27/3030	27″	30″	27″	1230	9″ X 27″
BLW36/3930	36″	39″	36″	2130	18″ X 27″
BLW39/4230	39″	42″	39″	2430	21″ X 27″
BLW42/4530	42″	45″	42″	2730	24″ X 27″

30″ High Diagonal Corner Wall Cabinet

CW2430	651

• Requires 24″ x 24″ wall space

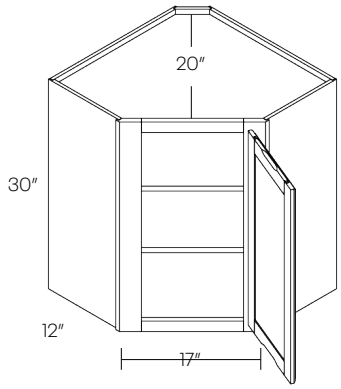

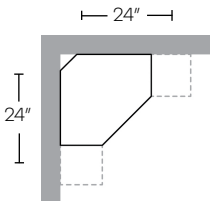

Item Number	R
942	349
1242	380
1542	418
1842	465
2142	554

42″ High 1 Door Wall Cabinet

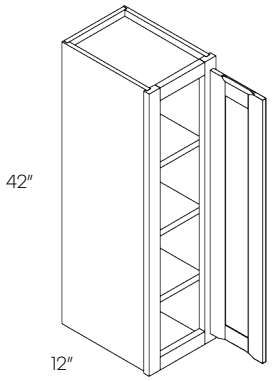

2442	595
2742	656
3042	680
3342	729
3642	772
4242	898

42″ High 2 Door Wall Cabinet

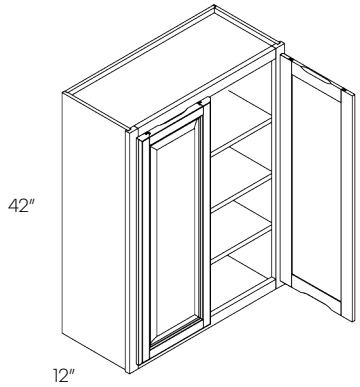

BLW27/3042	822
BLW36/3942	987
BLW39/4242	1081

42″ High Blind Wall Cabinet

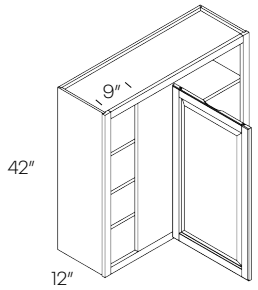

BLW27/BLW36

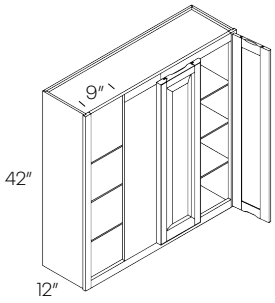

BLW39

- Reversible L or R
- Can be installed at actual size

Cabinet	Min. Pull	Max. Pull	Actual Size	Door(s)	Door Opening
BLW27/3042	27″	30″	27″	1242	9″ X 39″
BLW36/3942	36″	39″	36″	2142	18″ X 39″
BLW39/4242	39″	42″	39″	2442	21″ X 39″

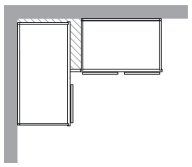

Item Number	R

42″ High Diagonal Corner Wall Cabinet

CW2442	849

• Requires 24″ x 24″ wall space

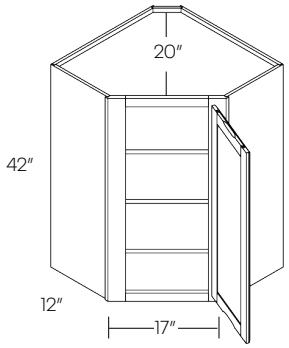

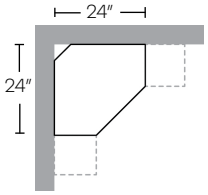

Microwave Cabinet

MW3030	625

• Opening 27″ x 15¾″
• Shelf is 15¼″ deep
• Opening has natural finish
• Shelf ships loose

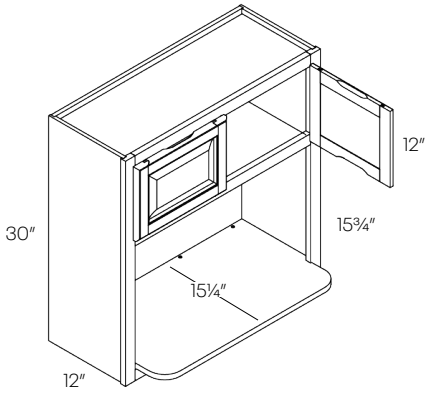

1 Door Base Cabinet

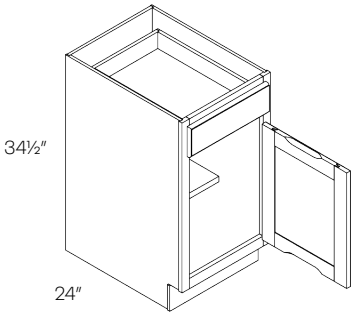

Item Number	R
B9	380
B12	434
B15	456
B18	479
B21	544

• 10″ Deep Shelf

1 Drawer 2 Door Base Cabinet

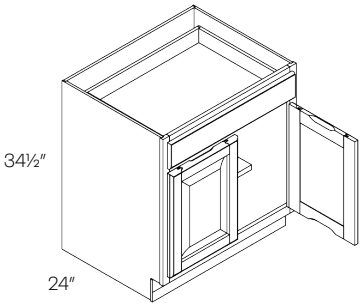

B24	580
B27	640

• 10″ Deep Shelf

2 Drawer 2 Door Base Cabinet

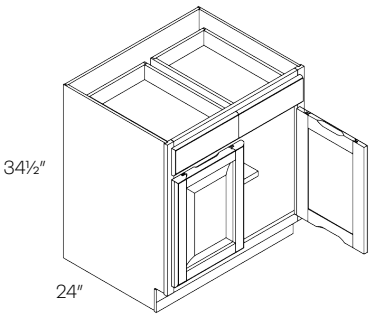

B30	698
B33	746
B36	783
B39	833
B42	878

• 10″ Deep Shelf

2 Drawer 4 Door Base Cabinet

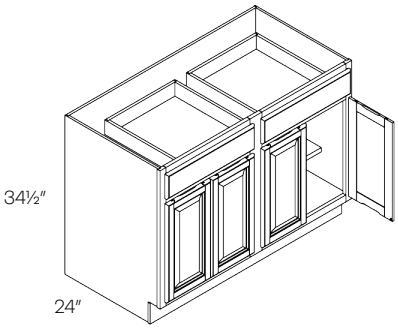

Item Number	R
B48	980

• 10″ Deep Shelf

3 Drawer Base Cabinet

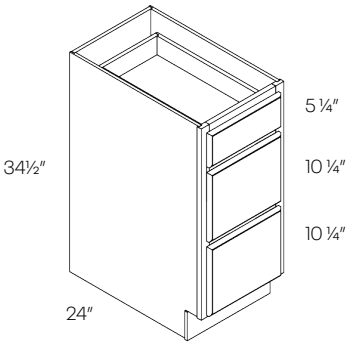

DB12	639
DB15	670
DB18	690
DB21	718
DB24	743

Blind Base Cabinet

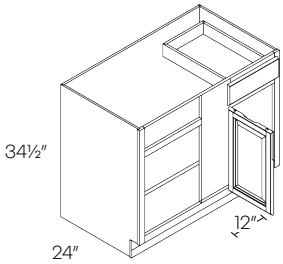

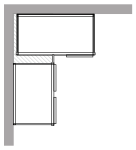

BLB36/39	777
BLB39/42	803
BLB42/45	857

• Reversible Left or Right
• Must be pulled to the minimum position
*Left blind shown

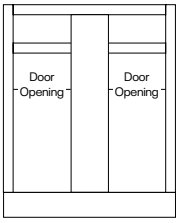

Cabinet	Min. Pull	Max. Pull	Actual Size	Door(s)	Door Opening
BLB36/39	36″	39″	30″	B12	9″
BLB39/42	39″	42″	36″	B15	12″
BLB42/45	42″	45″	42″	B18	15″

Item Number	R

Diagonal Corner Sink Base Cabinet

CSB36	1178

• Requires 36″ x 36″ wall space.

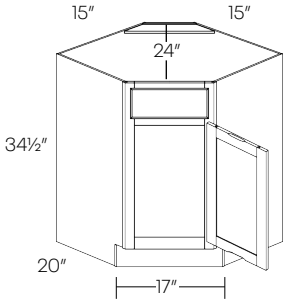

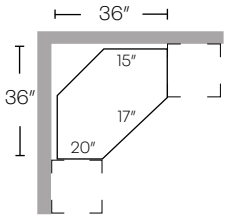

Diagonal Corner Sink Front

CSF36*	312
CSFFL36 (Floor)	145

*Requires 36″ x 36″ wall space.
*Requires Floor (sold separately)

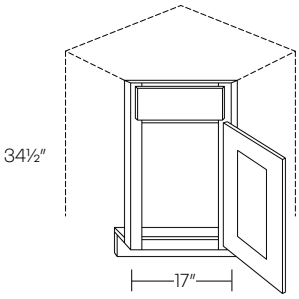

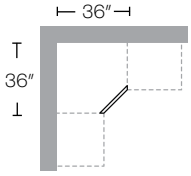

Carousel Corner Base Cabinet

CAR36	1270

• Wood rotating shelf
• Requires 36″ x36″ wall space
• Pie cut is 12″

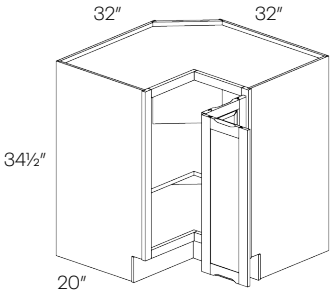

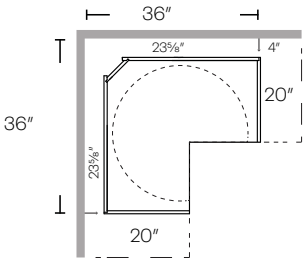

Item Number	R

1 Drawer Front 2 Door Sink Base

SB24	575
SB27	617

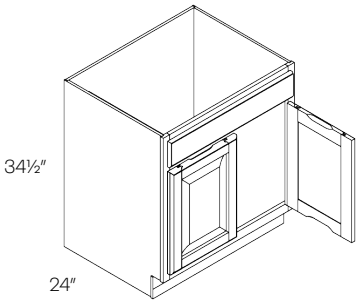

2 Drawer Front 2 Door Sink Base

SB30	656
SB33	693
SB36	710
SB39	728
SB42	743

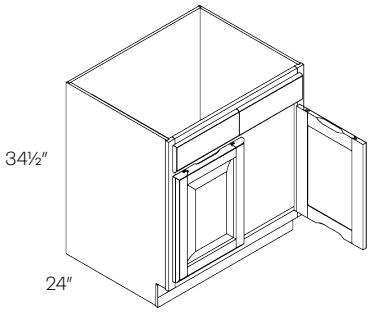

2 Drawer 4 Door Base Cabinet

SB48	835

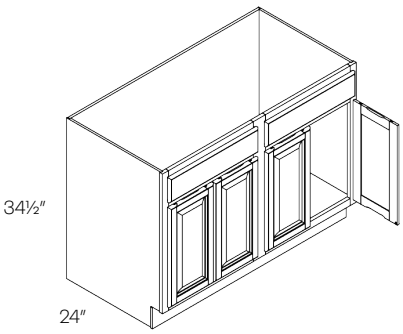

Item Number	R

Combination Sink Base Cabinet

SB42RD	789
SB42LD	789

- Drawer is 12″ wide
- Right Drawer (RD) shown

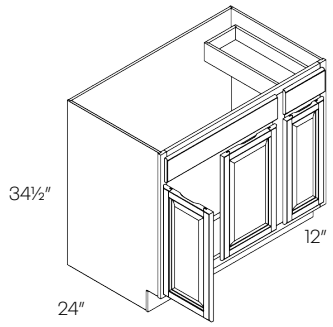

Combination Sink Base Cabinet

SB54	934
SB60	1017

	Door	Sink	Door
SB54	12″	30″	12″
SB60	15″	30″	15″

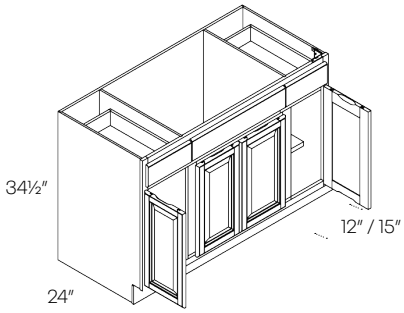

Single Door Utility Cabinet

Item Number	R
UC1824X84*	1453
UC1824X96*	1888

- 3 bottom adjustable shelves
- 84″ has 2 upper shelves
- 96″ has 3 upper shelves

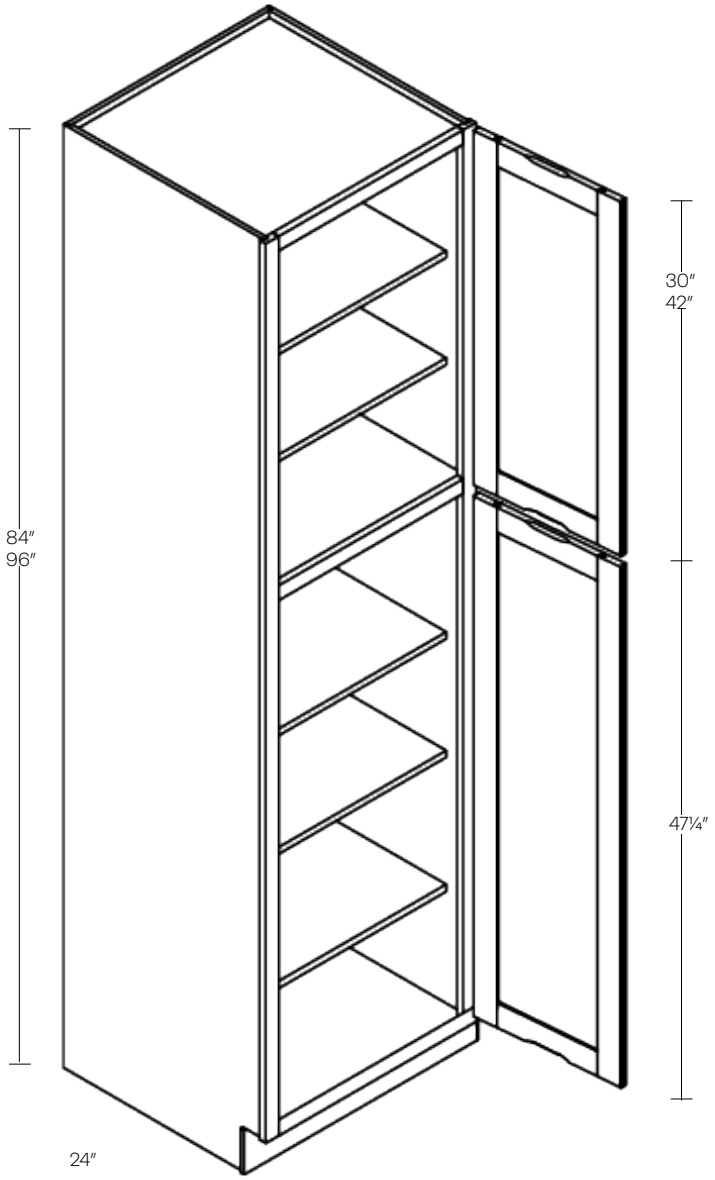

Double Door Utility Cabinet

Item Number	R
UC2424X84*	1673
UC2424X96*	2112

- 3 bottom adjustable shelves
- 84″ has 2 upper shelves
- 96″ has 3 upper shelves

*POS not available

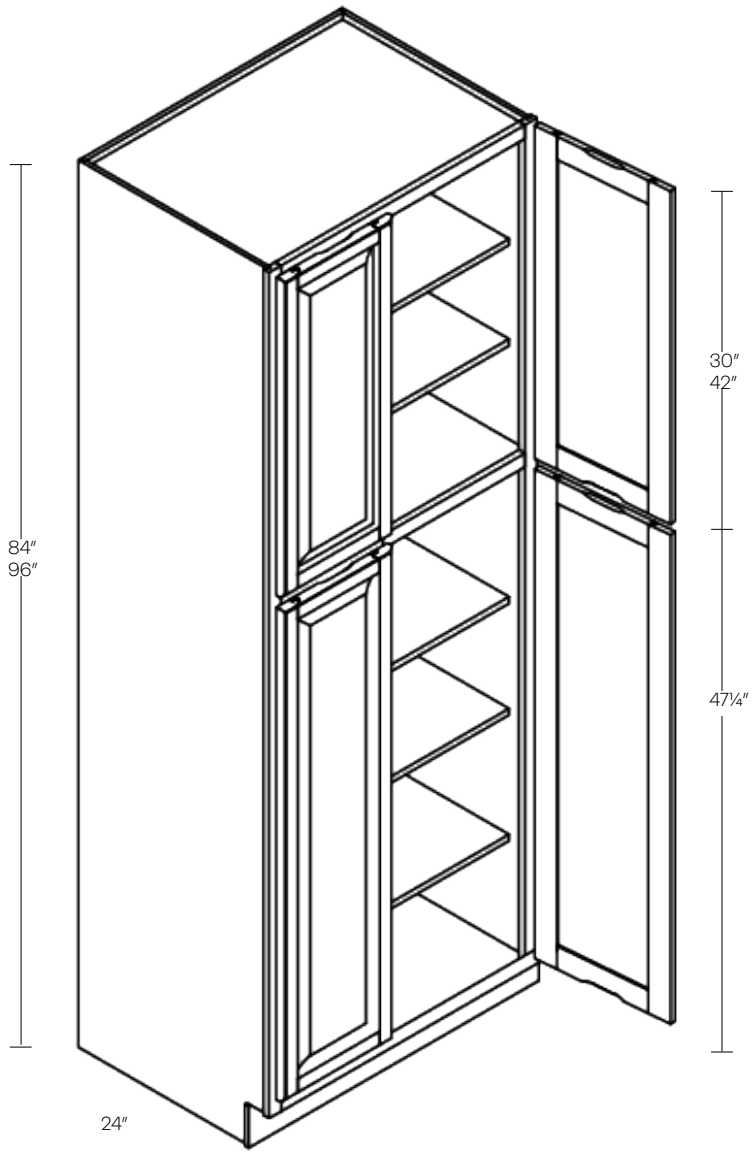

	Item Number	R
1 Door Vanity Sink Base Cabinet	**V1816-32.5**	284

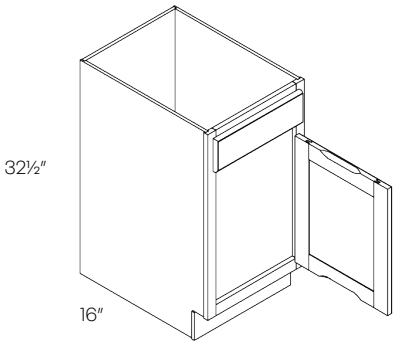

Vanity Drawer Base Cabinet	**VDB15-32.5**	653
	VDB18-32.5	668

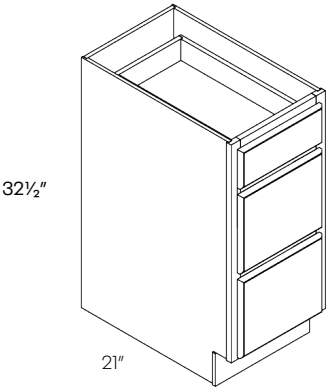

2 Door Vanity Sink Base Cabinet	**V2418-32.5**	366
	V3018-32.5	465
	V2421-32.5	394
	V3021-32.5	493
	V3621-32.5	596

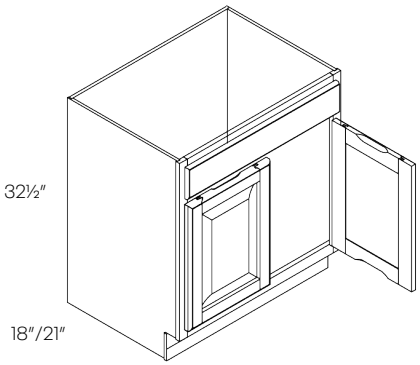

Item Number	R

1 Door 2 Drawer Vanity Sink Base Cabinet

V2421D-32.5	569
V3021D-32.5	780

• Drawers on right hand side only

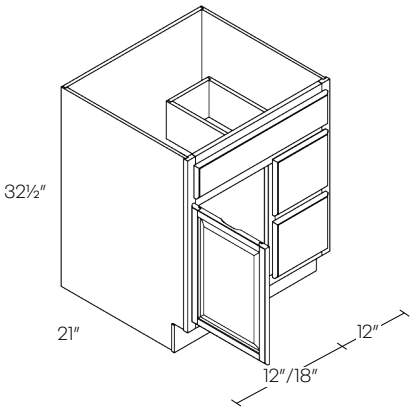

2 Door 2 Drawer Vanity Sink Base Cabinet

V3621D-32.5	881
V4221D-32.5	894

• Drawers on right hand side only

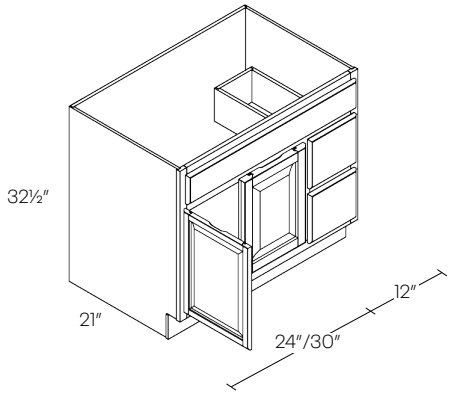

2 Door 4 Drawer Vanity Sink Base Cabinet

V4821DD-32.5	1023

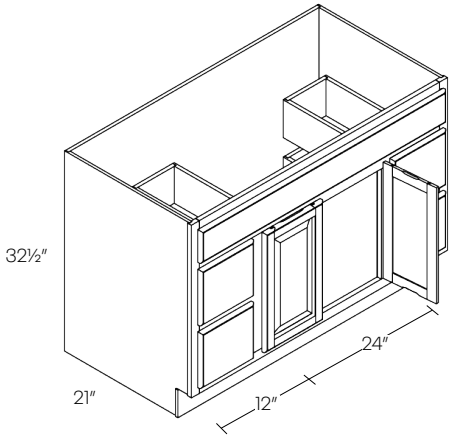

	Item Number	R
Single Door Medicine Cabinet	**MC1830**	285

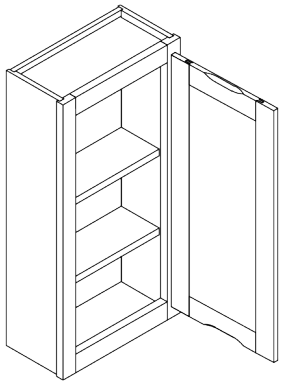

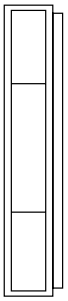

Double Door Medicine Cabinet	**MC2430**	508
	MC3030	567
	MC3630	638

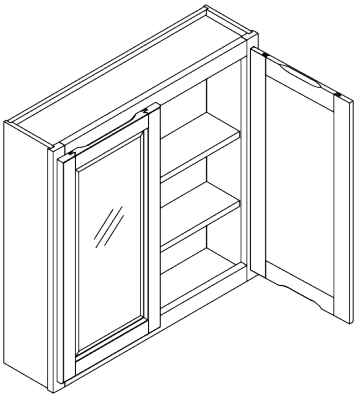

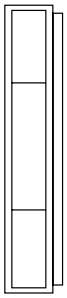

Filler

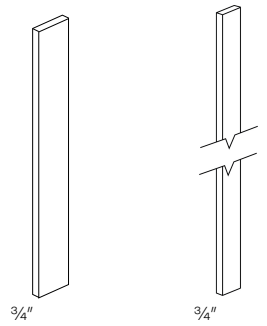

F330/F630/F342/F642 F396/F696

Item Number	R
F330	47
F630	73
F342	63
F642	103
F396	120
F696	234

- Fillers finished on all 4 sides

Plywood Panel

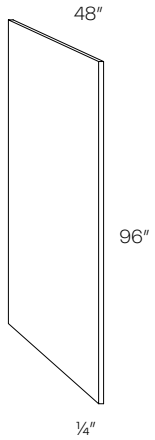

Item Number	R
PLY4X8	349

Base End Panel

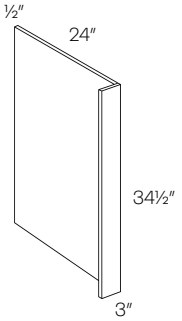

DWR

DWR3	159

Crown Molding

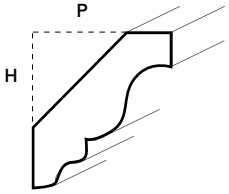

CRM
Height: 2″
Projection: 2″

CRM	115

- 8 feet long

Refrigerator End Panel

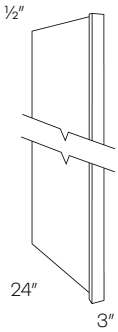

REP3

REP384	444
REP396	489

Corner Molding

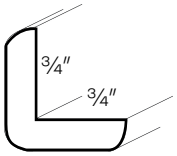

OCM

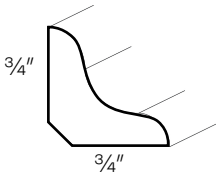

ICM

OCM	109
ICM	109

- 8 feet long

Item Number	R

Scribe Molding

SCM	72

- 8 feet long

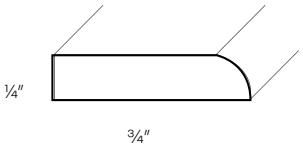

Item Number	R

Toe Kick

TKS	81

- 8 feet long

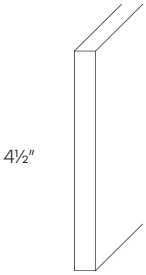

Touch Up Kit

TUP	100

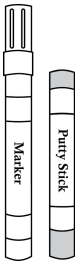

TUP

Cabinet & Door Information

Concord Collection

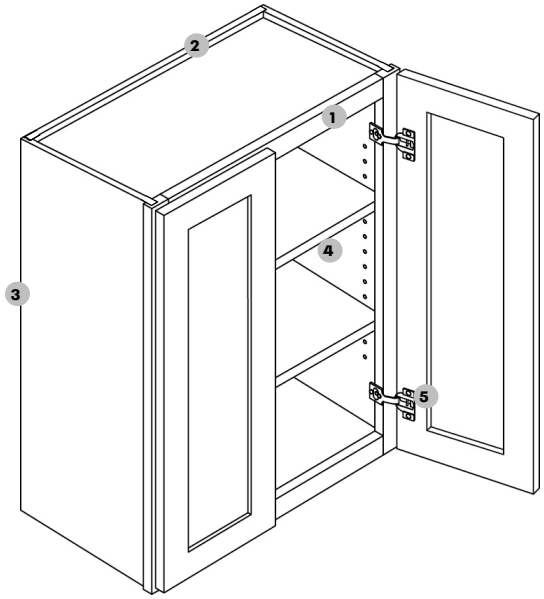

1. **Frame** — ¾″ thick, 1½″ wide, kiln-dried solid hardwood. Frame and sides are installed with a DADO interlocking system, which insures easy assembly and inseparable strength
2. **Back panel** — Full ½″ plywood back with 3″ hanging rails, installed with DADO groove. Screwed to top and bottom. Exterior is finished.
3. **End panel**

   Concord Collection
   ½″ Plywood sides. Finished exterior with a natural wood-finish veneer interior.

   Concord Plus Program
   1/4″ Applied finished ends - Customer must order. End panel will be flush.
4. **Shelves** — 3/4″ thick, plywood; fully adjustable with metal clips.
5. **Hinges**

   Concord Collection
   Six-way, soft close adjustable hinges

   Concord Plus Program
   BLUM soft close adjustable hinges

   *36″ and 42″ Wall cabinets will have 3 hinges

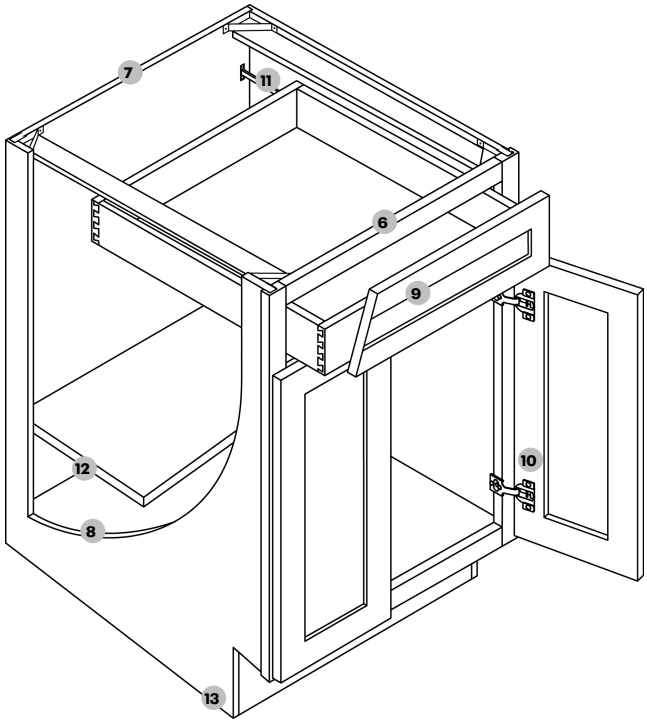

6. **Base frame** — ¾″ thick, 1½″ wide, kiln-dried solid hardwood. Frame and sides are installed with a DADO groove, which insures easy assembly. Exterior is finished.
7. **Back panel** — Full ½″ plywood back with 3″ hanging rails, installed with DADO groove. Screwed to top and bottom.
8. **End panel**

   Concord Collection
   ½″ Plywood sides. Finished exterior with a natural wood-finish veneer interior.

   Concord Plus Program
   1/4″ Applied finished ends - Customer must order. End panel will be flush.
9. **Drawers** — ¾″ Solid wood, dovetail construction. With high quality stainless steel full extension under-mount glide. With soft-close safety feature.
10. **Hinges**

    Concord Collection
    Six-way, soft close adjustable hinges

    Concord Plus Program
    BLUM soft close adjustable hinges
11. **Glides**

    Concord Collection
    High quality stainless steel full extension under-mount glide. With soft-close safety feature.

    Concord Plus Program
    BLUM soft close adjustable ull extensionunder-mount glides
12. **Shelves** — 3/4″ thick, plywood; fully adjustable with metal clips. (10″ deep)
13. **Toe kick** — 4 ½″ Toe kick with 2 ½″ inset on all standard base and vanity cabinets.

Full Overlay

1/4″ Reveal

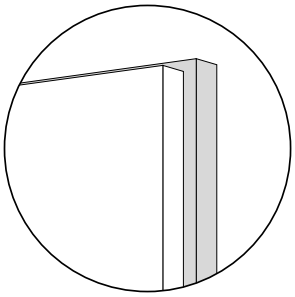

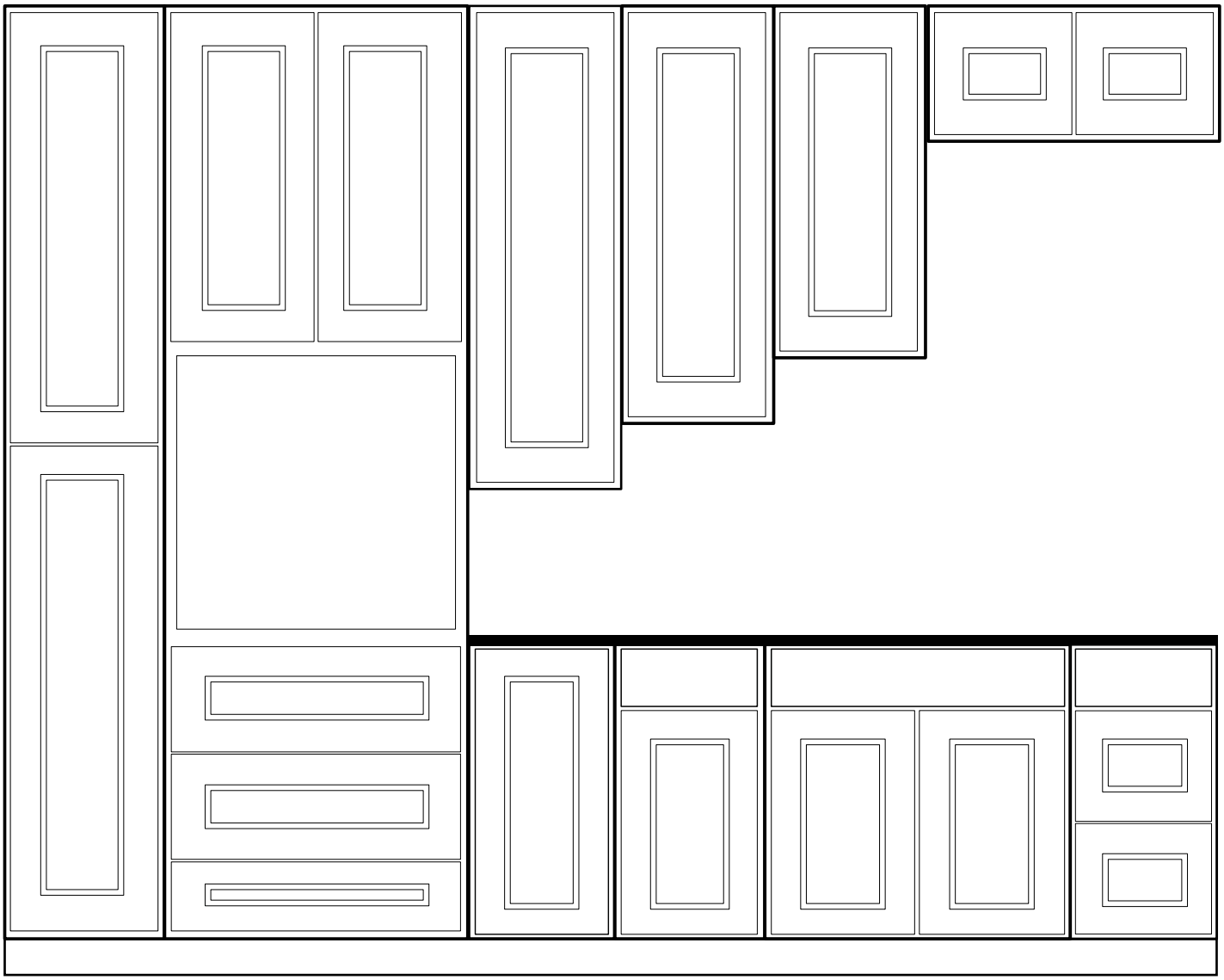

Elegant

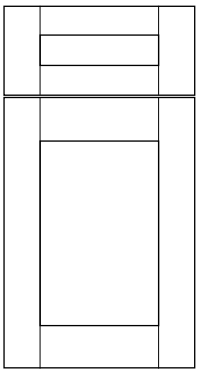

A full overlay 5 piece solid wood, with solid MDF veneer flat center panel. Mortise and Tenon construction.

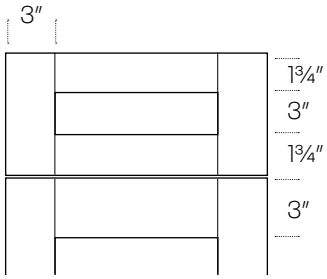

*Must call out finished sides for all PLUS orders

Finish	Price Code
EB02 - Smoky Grey (stain)	A
EB10 - White (paint)	A
EB23 - Stone (hybrid stain)	B
EB27 - Ocean (paint)	A

Elegant Plus - EBP	Price Code
101 - Sleek White	M
102 - Linen	M
103 - Sahara	M
104 - Mountain Stream	M
105 - Adirondack Blue	M
106 - Sage	M
107 - Evergreen	M
108 - Rumors	M
109- Cracked Pepper	M
110 - Jet Black	M

Newport

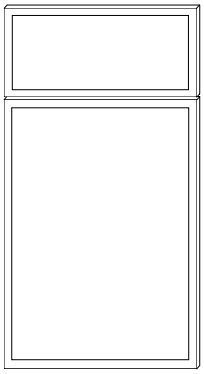

A full overlay 5 piece solid wood, with solid MDF veneer flat center panel. The Newport door features a 3/4″ frame.

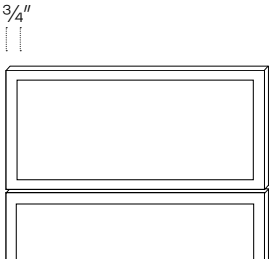

*Must call out finished sides for all PLUS orders

Finish	Price Code
NB10 - White	A

Newport Plus	Price Code
Stain - NKP	
200 - Ale	D
201 - Bourbon	D
Paint - NBP	
101 - Sleek White	M
102 - Linen	M
103 - Sahara	M
104 - Mountain Stream	M
105 - Adirondack Blue	M
106 - Sage	M
107 - Evergreen	M
108 - Rumors	M
109- Cracked Pepper	M
110 - Jet Black	M

Fashion

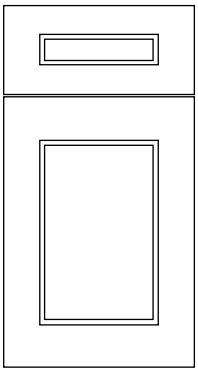

A full overlay 5 piece solid wood, with solid MDF veneer flat center panel. Mortise and Tenon construction.

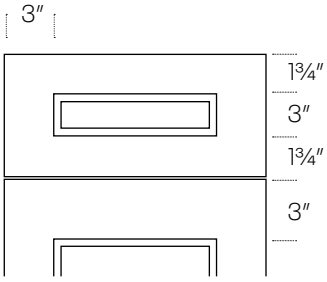

*Must call out finished sides for all PLUS orders

Finish	Price Code
FB10 - White (paint)	B
FB27 - Ocean (paint)	B

Fashion Plus - FBP	Price Code
101 - Sleek White	N
102 - Linen	N
103 - Sahara	N
104 - Mountain Stream	N
105 - Adirondack Blue	N
106 - Sage	N
107 - Evergreen	N
108 - Rumors	N
109- Cracked Pepper	N
110 - Jet Black	N

Sydney

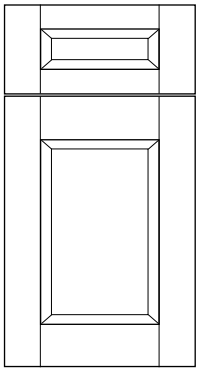

A full overlay 5 piece solid wood, MDF veneer center panel. French mitered construction.

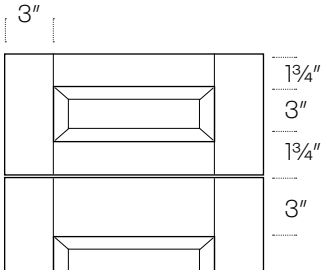

*Must call out finished sides for all PLUS orders

Finish	Price Code
SB10 - White	C

Sydney Plus	Price Code
Stain - SKP	
200 - Ale	P
201 - Bourbon	P
Paint - SBP	
101 - Sleek White	O
102 - Linen	O
103 - Sahara	O
104 - Mountain Stream	O
105 - Adirondack Blue	O
106 - Sage	O
107 - Evergreen	O
108 - Rumors	O
109- Cracked Pepper	O
110 - Jet Black	O

Richmond

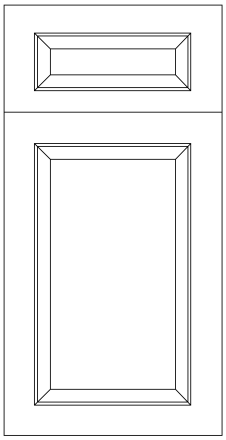

A full overlay 5 piece solid wood, raised panel MDF veneer center. Mitered construction.

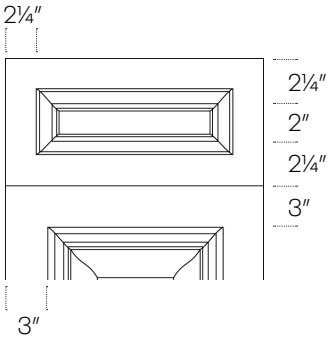

*Must call out finished sides for all PLUS orders

Finish	Price Code
RB10 - White (paint)	C
RB23 - Stone (hybrid stain)	C

Richmond Plus - RBP	Price Code
101 - Sleek White	O
102 - Linen	O
103 - Sahara	O
104 - Mountain Stream	O
105 - Adirondack Blue	O
106 - Sage	O
107 - Evergreen	O
108 - Rumors	O
109- Cracked Pepper	O
110 - Jet Black	O

Park Avenue

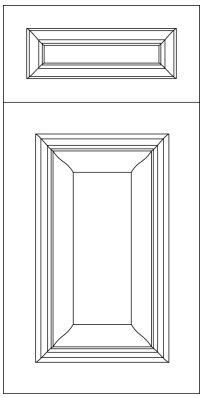

A full overlay 5 piece solid wood, raised panel MDF veneer center. Mitered construction.

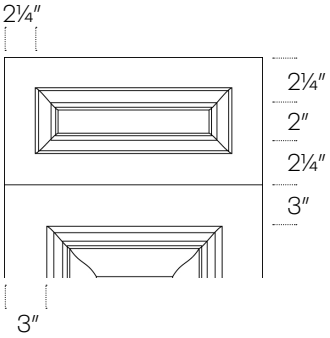

Finish	Price Code
PB10 - White (paint)	C
PB27- Ocean (paint)	C

Specifications & Pricing

Concord Collection

12″ High Wall Cabinet

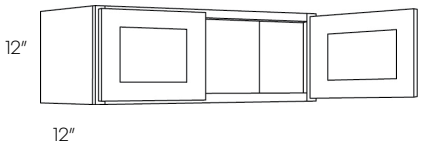

Item Number	Plus Program A	B	C	D	M	N	O	P
3012	428	454	479	540	514	545	575	604
3312	453	480	508	572	544	576	610	641
3612	493	523	553	622	592	628	664	698
3912	566	595	625	714	690	714	750	788

• No Shelf

12″ High, 24″ Deep Wall Cabinet

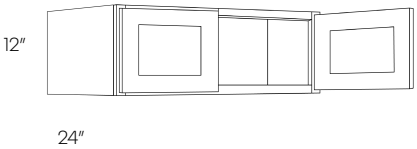

3012X24	603	640	677	761	724	768	813	854
3312X24	615	653	689	775	738	784	827	869
3612X24	663	705	744	836	796	846	893	938
3912X24	711	747	784	897	854	897	941	989

• No Shelf

15″ High Wall Cabinet

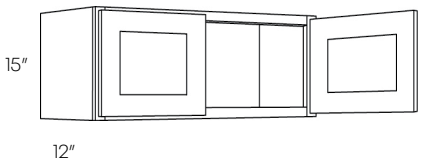

1215 (one door)	275	311	330	347	330	374	396	416
1515 (one door)	294	327	347	371	353	393	417	438
1815 (one door)	317	344	365	401	381	413	438	460
2115 (one door)	339	361	383	428	407	434	460	483
2415	431	457	481	544	518	549	578	607
3015	444	471	498	560	533	566	598	628
3315	469	498	525	592	563	598	630	662
3615	540	573	604	681	648	688	725	762
3915	597	627	659	753	717	753	791	831

• No Shelf

15″ High, 24″ Deep Wall Cabinet

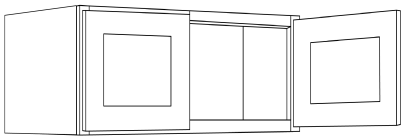

Item Number	A	B	C	Plus Program D	M	N	O	P
3015X24	639	680	718	806	767	816	862	906
3315X24	672	712	754	848	807	855	905	951
3615X24	720	763	807	908	864	916	969	1018
3915X24	768	807	847	969	922	969	1017	1068

• No Shelf

18″ High Wall Cabinet

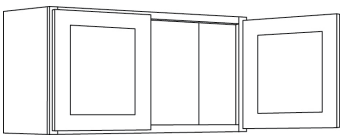

1218 (one door)	314	356	377	396	377	428	453	476
1518 (one door)	338	374	396	427	406	449	476	500
1818 (one door)	363	394	417	458	436	473	501	527
2118 (one door)	408	433	457	515	490	520	549	577
2418	451	478	504	570	542	574	605	636
3018	474	502	531	598	569	603	638	670
3318	489	518	548	617	587	622	658	691
3618	559	593	626	705	671	712	752	790
3918	626	658	691	790	752	790	830	872

• No Shelf

18″ High, 24″ Deep Wall Cabinet

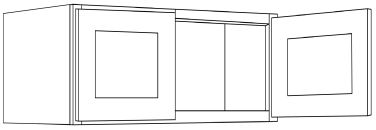

3018X24	676	717	758	853	812	861	910	956
3318X24	729	772	816	919	875	927	980	1029
3618X24	774	822	869	976	929	987	1043	1096
3918X24	819	860	903	1033	983	1032	1084	1139

• No Shelf

24″ High Wall Cabinet

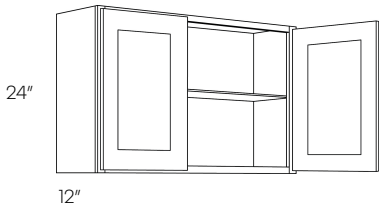

Item Number	A	B	C	D	M	N	O	P
				Plus Program				
2424	607	645	681	766	729	774	818	859
2724	611	648	684	771	734	778	821	863
3024	620	657	693	782	744	789	832	874
3324	658	698	737	830	790	838	885	930
3624	706	748	791	891	848	898	950	998
3924	734	771	810	926	881	926	972	1021
4224	795	844	892	1002	954	1013	1071	1125

• Has One Shelf

24″ High, 24″ Deep Wall Cabinet

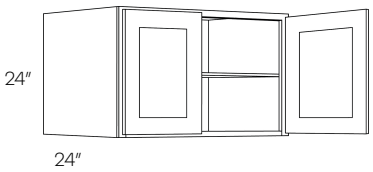

3024X24	831	880	930	1048	998	1056	1116	1172
3324X24	891	944	998	1124	1070	1133	1198	1258
3624X24	955	1013	1071	1204	1146	1216	1286	1351
3924X24	1019	1070	1124	1285	1223	1284	1349	1417

• Has One Shelf

15″ - 18″″ High Diagonal Corner Wall Cabinet

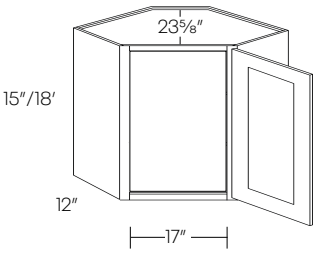

CW2415	634	671	711	800	761	806	854	897
CW2418	725	769	816	914	870	923	980	1029

• 2430 uses 14¹¹⁄₁₆″ door
• Requires 24″ X 24″ wall space

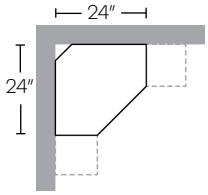

cnc cabinetry

Horizontal Wall Cabinet

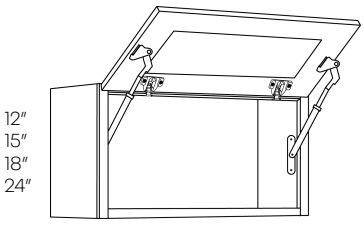

12″
15″
18″
24″

12″

Item Number	A	B	C	D	M	N	O	P
				Plus Program				
3012-HD	687	730	770	867	825	876	924	971
3015-HD	704	746	789	888	845	896	947	995
3018-HD	710	754	795	895	852	905	954	1002
3024-HD *	878	931	984	1107	1054	1118	1181	1241
3612-HD	753	797	843	950	904	957	1012	1063
3615-HD	798	847	895	1006	958	1017	1074	1128
3618-HD	818	868	917	1032	982	1042	1101	1157
3624-HD*	965	1024	1082	1216	1158	1229	1299	1364

*Has One Shelf

30″ High Single Door Wall Cabinet

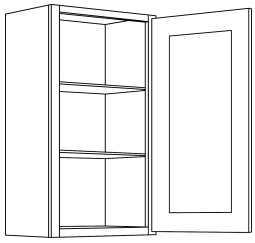

30″

12″

930	351	372	393	444	422	447	472	496
1230	392	416	439	495	471	500	527	554
1530	422	447	472	533	507	537	567	596
1830	475	503	532	599	570	604	639	671
2130	567	602	636	716	681	723	764	803

30″ High Double Door Wall Cabinet

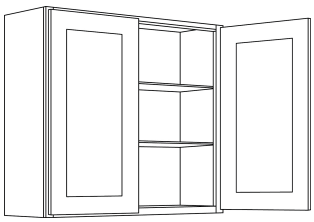

30″

12″

2430	604	641	678	762	725	770	814	855
2730	667	708	747	842	801	850	897	942
3030	683	725	766	861	820	870	920	966
3330	745	791	835	939	894	950	1002	1053
3630	791	839	887	998	950	1007	1065	1119
3930	855	907	959	1078	1026	1089	1151	1209
4230	922	977	1033	1163	1107	1173	1240	1302

30″ High Blind Wall Cabinet

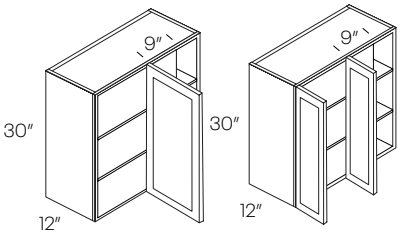

BLW27/BLW30/BLW36 BLW42

Item Number	A	B	C	D (Plus Program)	M	N	O	P
BLW27/3030 (1 door)	861	913	964	1086	1034	1096	1157	1215
BLW30 /3330 (1 door)	947	1004	1061	1194	1137	1205	1274	1338
BLW36/3930 (1 door)	1033	1095	1157	1302	1240	1314	1389	1459
BLW42/4530	1237	1312	1385	1560	1485	1575	1662	1746

- Reversible left or right

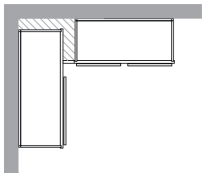

Cabinet	Min. Pull	Max. Pull	Actual Size	Door(s)	Door Opening
BLW27/3030	27″	30″	27″	1230	9″ X 27″
BLW30/3330	30″	33″	30″	1530	12″ X 27″
BLW36/3930	36″	39″	36″	2130	18″ X 27″
BLW42/4530	42″	45″	42″	2730	24″ X 27″

30″ High Diagonal Corner Wall Cabinet

CW2430	881	935	987	1111	1058	1122	1185	1245

- 2430 uses 14 11/16″ door
- Requires 24″ X 24″ wall space

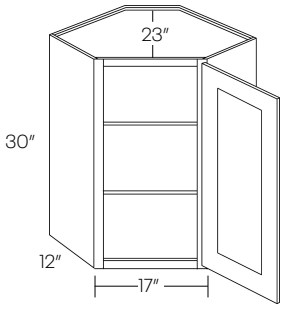

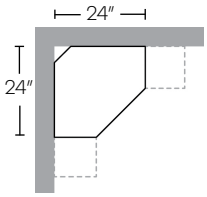

30″ High Corner Wall Cabinet

WSQ2430	947	1003	1060	1194	1137	1204	1272	1336

- Requires 24″ X 24″ wall space
- Pie is 12″ X 12″

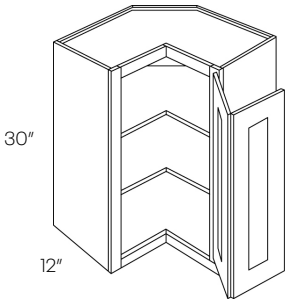

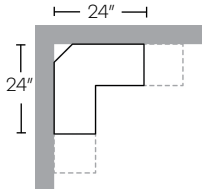

36″ High Single Door Wall Cabinet

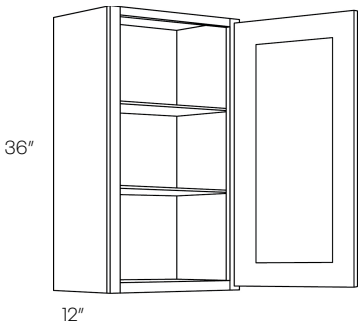

Item Number	A	B	C	D	M	N	O	P
				Plus Program				
936	422	447	472	533	507	537	567	596
1236	466	494	522	588	560	593	627	659
1536	507	539	569	640	609	647	683	718
1836	564	599	633	711	677	719	760	798
2136	678	719	760	855	814	863	912	958

36″ High Double Door Wall Cabinet

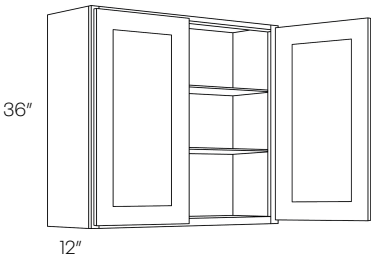

2436	722	766	809	911	867	920	971	1020
2736	798	847	895	1006	958	1017	1074	1128
3036	833	884	934	1050	1000	1061	1121	1178
3336	891	944	998	1124	1070	1133	1198	1258
3636	942	999	1056	1188	1131	1199	1268	1332
4236	1106	1172	1239	1395	1328	1407	1487	1562

36″ High Blind Wall Cabinet

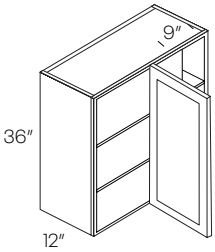

BLW27/BLW36

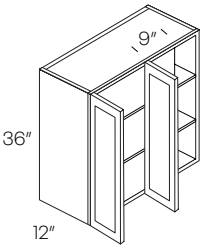

BLW39

BLW27/3036	1002	1062	1122	1264	1203	1275	1347	1415
BLW30/3336	1096	1163	1228	1382	1316	1396	1474	1548
BLW36/3936	1190	1263	1333	1500	1428	1516	1600	1680
BLW42/4536	1384	1467	1552	1745	1661	1678	1863	1957

• Reversible left or right

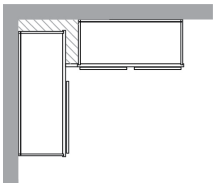

Cabinet	Min. Pull	Max. Pull	Actual Size	Door(s)	Door Opening
BLW27/3036	27″	30″	27″	1236	9″ X 33″
BLW30/3336	30″	33″	30″	1536	12″ X 33″
BLW36/3936	36″	39″	36″	2136	18″ X 33″
BLW42/4536	42″	45″	42″	2736	24″ X 33″

	Item Number	A	B	C	Plus Program D	M	N	O	P
36″ High Diagonal Corner Wall Cabinet	**CW2436**	928	984	1039	1170	1114	1181	1247	1310

• 2430 uses 14 11/16″ door
• Requires 24″ X 24″ wall space

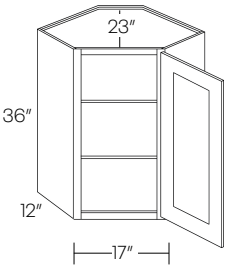

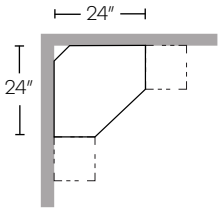

36″ High Corner Wall Cabinet	**WSQ2436**	996	1056	1116	1256	1196	1268	1340	1407

• Requires 24″ X 24″ wall space
• Pie is 12″ X 12″

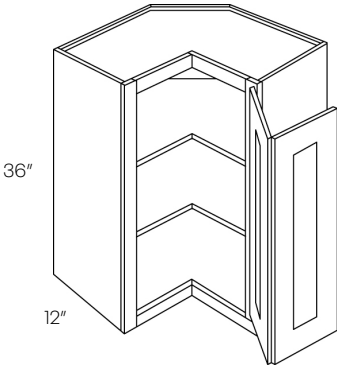

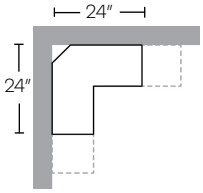

42″ High Single Door Wall Cabinet	**942**	470	499	527	593	564	599	633	665
	1242	515	546	577	649	618	656	693	728
	1542	565	600	634	712	678	720	761	800
	1842	627	665	704	791	753	798	845	888
	2142	752	796	842	949	903	956	1011	1062

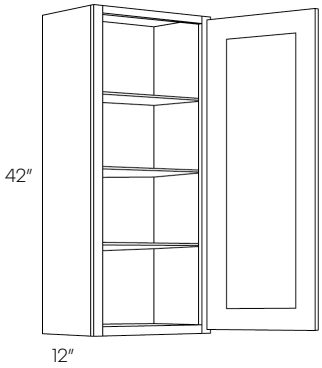

42″ High Double Door Wall Cabinet

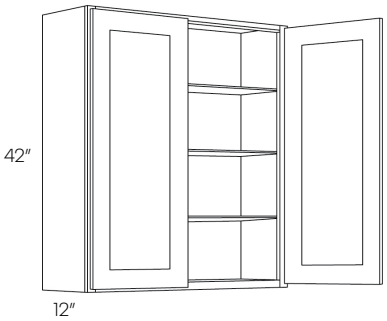

Item Number	A	B	C	Plus Program D	M	N	O	P
2442	807	855	903	1018	969	1026	1084	1139
2742	886	939	992	1118	1064	1127	1191	1251
3042	917	973	1027	1157	1101	1168	1233	1295
3342	987	1048	1107	1245	1185	1258	1329	1396
3642	1046	1109	1171	1319	1256	1331	1406	1477
4242	1216	1290	1362	1533	1460	1548	1635	1717

42″ High Blind Wall Cabinet

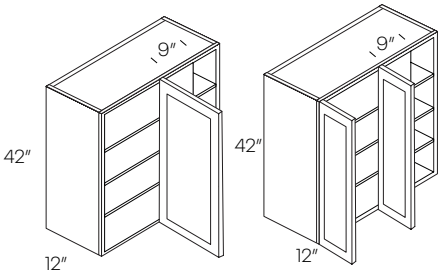

BLW27/BLW36 **BLW42**

BLW27/3042	1116	1183	1250	1407	1340	1420	1500	1575
BLW30/3342	1228	1302	1375	1548	1474	1563	1650	1733
BLW36/3942	1339	1420	1500	1688	1607	1704	1800	1890
BLW42/4542	1525	1620	1712	1922	1830	1864	2055	2158

• Reversible left or right

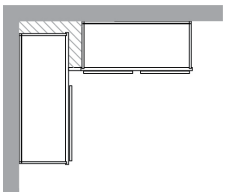

Cabinet	Min. Pull	Max. Pull	Actual Size	Door(s)	Door Opening
BLW27/3042	27″	30″	27″	1242	9″ X 39″
BLW30/3342	30″	33″	30″	1542	12″ X 39″
BLW36/3942	36″	39″	36″	2142	18″ X 39″
BLW42/4542	42″	45″	42″	2742	24″ X 39″

42″ High 4 Door Wall Cabinet

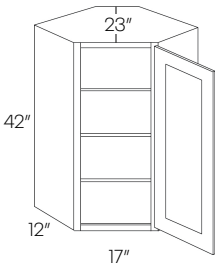

CW2442	1150	1220	1289	1449	1380	1464	1547	1625

• Requires 24″ X 24″ wall space

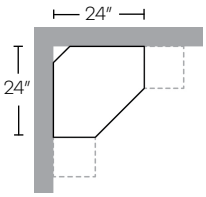

	Item Number	A	B	C	Plus Program D	M	N	O	P
42″ High Corner Wall Cabinet	**WSQ2442**	1234	1309	1383	1556	1481	1571	1660	1743

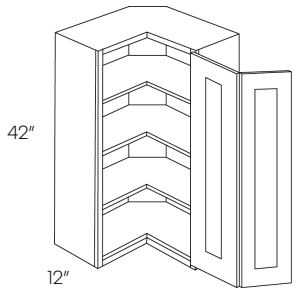

- Requires 24″ X 24″
- Pie is 12″ X 12″

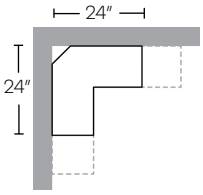

Wine Rack Cabinet	**WCX1818**	360	360	360	454	432	432	432	454

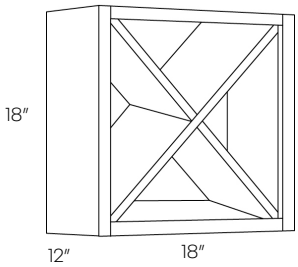

WCX1818

- Finished interior

Organizer Cubby	**OC36**	297	297	297	375	357	357	357	375
	WC30	272	272	272	344	327	327	327	344
	WC36	282	282	282	356	339	339	339	356

WC

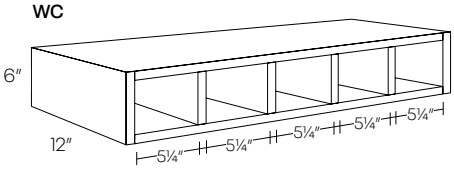

OC

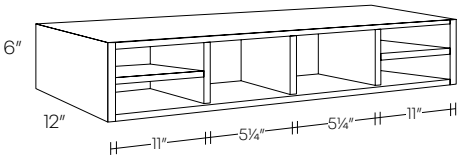

- Finished interior
- Wood is ¾″ thick

Knick Knack Wall Shelf

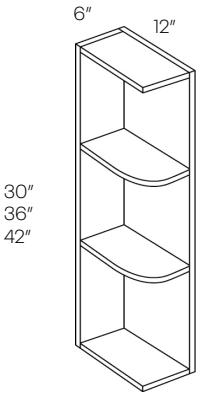

Item Number	A	B	C	Plus Program D	M	N	O	P
WS30	208	208	208	263	250	250	250	263
WS36	245	245	245	309	294	294	294	309
WS42	278	278	278	351	334	334	334	351

- Reversible
- Fixed shelves
- 42″ Has 3 shelves

Single Door Wall End Cabinet

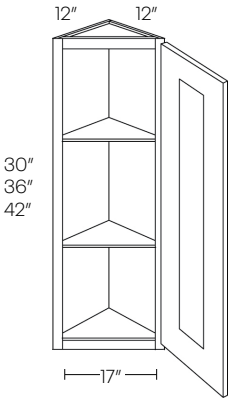

WEC1230	405	430	453	511	486	516	544	572
WEC1236	453	480	508	572	544	576	610	641
WEC1242	506	538	567	639	608	806	681	716

- 42″ Has 3 shelves

Double Door Wall End Cabinet

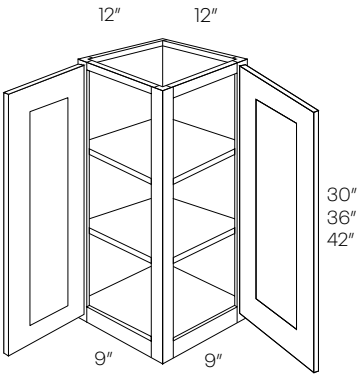

WECD1230	506	538	567	639	608	646	681	716
WECD1236	567	602	636	716	681	723	764	803
WECD1242	633	671	708	798	760	806	850	893

- 42″ Has 3 shelves

Wall Spice Cabinet

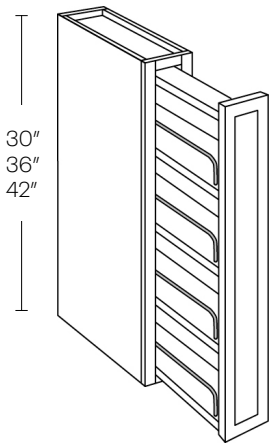

Item Number	A	B	C	D	M	N	O	P
				Plus Program				
WSP30	450	477	503	567	540	573	604	635
WSP36	523	555	586	660	628	666	704	740
WSP42	553	586	621	698	664	704	746	784

• Cabinet is 6″ wide

Microwave Cabinet

MW3018	507	533	560	640	609	609	609	640

• Finished interior
• Opening 27″ W X 14¼″ H
• Shelf ships loose
• Depth of the shelf may be cut-down

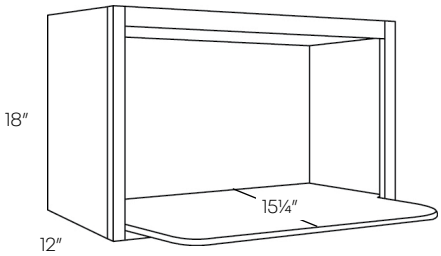

	Item Number	A	B	C	D	M	N	O	P
					Plus Program				
Single Door & Drawer Base Cabinet	**B9**	563	598	632	710	676	718	759	797
	B12	635	674	711	801	762	809	854	897
	B15	662	702	742	835	795	843	891	936
	B18	698	739	782	880	838	887	939	986
	B21	783	830	876	987	940	996	1052	1105

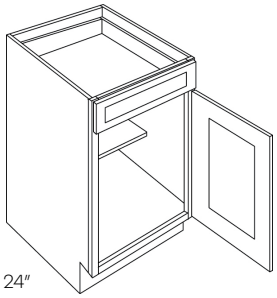

Single Drawer Double Door Base Cabinet	**B24**	843	893	943	1063	1012	1072	1132	1189
	B27	922	977	1033	1163	1107	1173	1240	1302

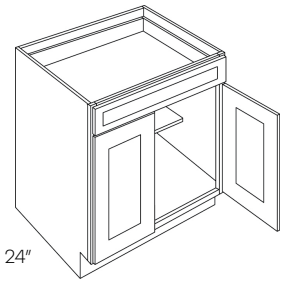

Double Drawer & Door Base Cabinet	**B30**	1046	1109	1171	1319	1256	1331	1406	1477
	B33	1110	1179	1244	1399	1332	1415	1493	1568
	B36	1160	1229	1299	1462	1392	1475	1559	1637
	B39	1225	1299	1373	1544	1470	1559	1648	1731
	B42	1294	1373	1451	1631	1553	1648	1742	1830

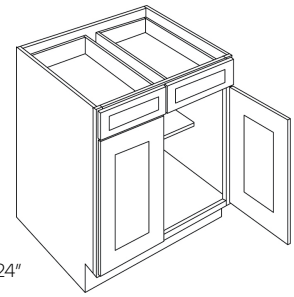

Full Height Single Door & Drawer Base Cabinet

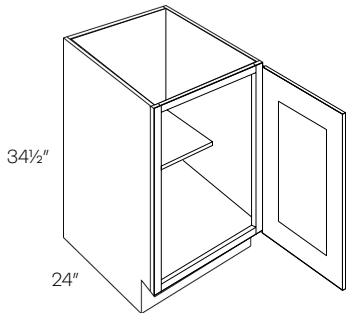

Item Number	Plus Program A	B	C	D	M	N	O	P
B9-FH	563	598	632	710	676	718	759	797
B12-FH	635	674	711	801	762	809	854	897
B15-FH	662	702	742	835	795	843	891	936
B18-FH	698	739	782	880	838	887	939	986
B21-FH	783	830	876	987	940	996	1052	1105

Full Height Single Drawer Double Door Base Cabinet

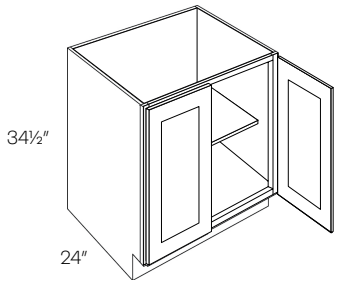

B24-FH	843	893	943	1063	1012	1072	1132	1189
B27-FH	922	977	1033	1163	1107	1173	1240	1302

Full Height Double Drawer & Door Base Cabinet

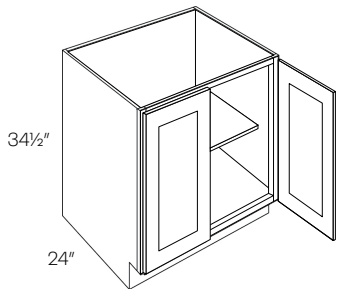

B30-FH	1046	1109	1171	1319	1256	1331	1406	1477
B33-FH	1110	1179	1244	1399	1332	1415	1493	1568
B36-FH	1160	1229	1299	1462	1392	1475	1559	1637
B39-FH	1225	1299	1373	1544	1470	1559	1648	1731
B42-FH	1294	1373	1451	1631	1553	1648	1742	1830

	Item Number	A	B	C	D	M	N	O	P
					Plus Program				
Double Drawer & 4 Door Base Cabinet	**B48**	1434	1520	1607	1808	1721	1824	1929	2026

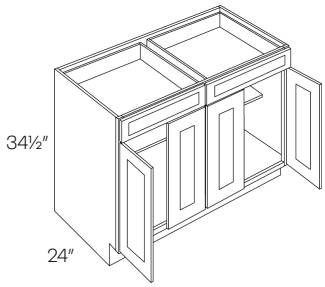

Single Door & Drawer Base Cabinet W/ 1 POS

B12-POS1	927	983	1038	1049	1010	1057	1102	1145
B15-POS1	962	1021	1079	1092	1052	1100	1148	1193
B18-POS1	1020	1081	1142	1158	1116	1165	1217	1264
B21-POS1	1117	1184	1251	1277	1230	1286	1342	1395

- BLUM glides not available for POS in PLUS program
- Ball bearing soft close glides for POS
- POS has natural finish

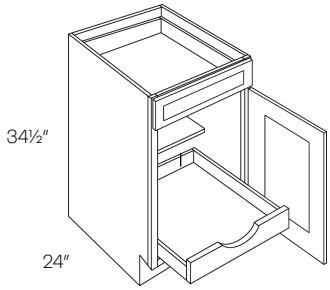

Single Drawer Double Door Base Cabinet W/1 POS

B24-POS1	1206	1278	1351	1384	1333	1393	1453	1510
B27-POS1	1295	1374	1452	1495	1439	1505	1572	1634

- BLUM glides not available for POS in PLUS program
- Ball bearing soft close glides for POS
- POS has natural finish

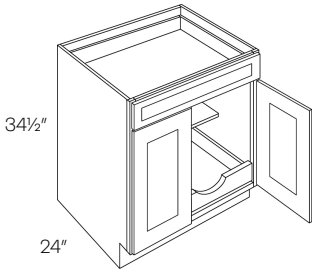

	Item Number	A	B	C	D	M	N	O	P
					Plus Program				
Full Height Double Drawer & 4 Door Base Cabinet	**B48-FH**	1434	1520	1607	1808	1721	1824	1929	2026

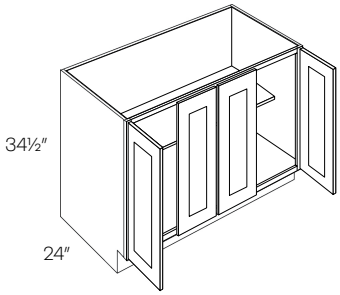

Full Height Single Door & Drawer Base Cabinet W/ 1 POS	**B12-FH-POS1**	927	983	1038	1049	1010	1057	1102	1145
	B15-FH-POS1	962	1021	1079	1092	1052	1100	1148	1193
	B18-FH-POS1	1020	1081	1142	1158	1116	1165	1217	1264
	B21-FH-POS1	1117	1184	1251	1277	1230	1286	1342	1395

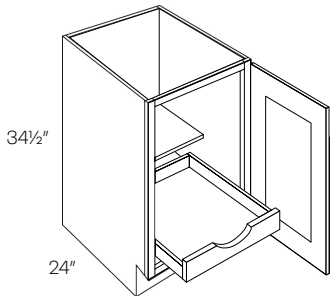

- BLUM glides not available for POS in PLUS program
- Ball bearing soft close glides for POS
- POS has natural finish

Full Height Single Drawer Double Door Base Cabinet W/1 POS	**B24-FH-POS1**	1206	1278	1351	1384	1333	1393	1453	1510
	B27-FH-POS1	1295	1374	1452	1495	1439	1505	1572	1634

- BLUM glides not available for POS in PLUS program
- Ball bearing soft close glides for POS
- POS has natural finish

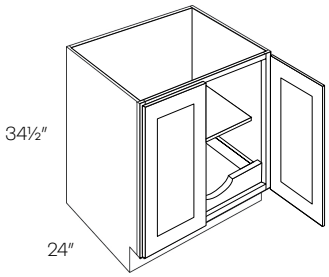

Double Drawer & Door Base Cabinet W/1 POS

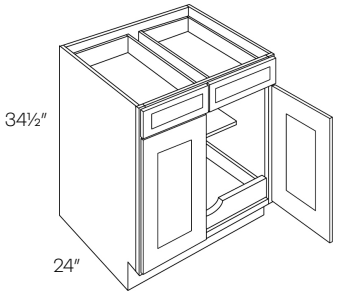

Item Number	A	B	C	Plus Program D	M	N	O	P
B30-POS1	1433	1519	1605	1663	1600	1675	1750	1821
B33-POS1	1509	1601	1691	1756	1689	1772	1850	1925
B36-POS1	1580	1674	1770	1841	1771	1854	1938	2016
B42-POS1	1862	1974	2087	2026	1948	2043	2137	2225

- BLUM glides not available for POS in PLUS program
- Ball bearing soft close glides for POS
- POS has natural finish

Double Drawer & 4 Door Base Cabinet W/2 POS

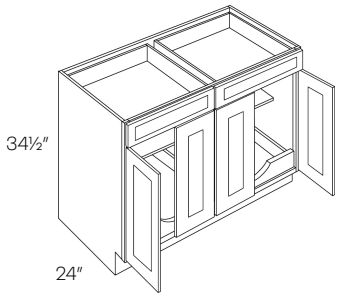

B48-POS2 (Has 2 POS)	1433	1519	1605	2992	2905	3008	3113	2620

- BLUM glides not available for POS in PLUS program
- Has two POS
- Ball bearing soft close glides for POS
- POS has natural finish

Single Door & Drawer Base Cabinet W/ 2 POS

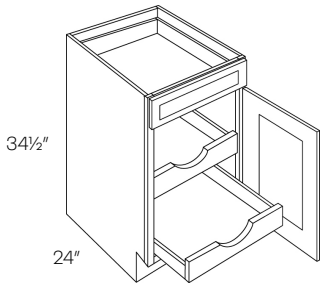

B12-POS2	1119	1186	1253	1297	1258	1305	1350	1393
B15-POS2	1164	1234	1304	1349	1309	1357	1405	1450
B18-POS2	1242	1316	1391	1436	1394	1443	1495	1542
B21-POS2	1351	1433	1512	1567	1520	1576	1632	1685

- BLUM glides not available for POS in PLUS program
- Ball bearing soft close glides for POS
- POS has natural finish

Full Height Double Drawer & Door Base Cabinet W/1 POS

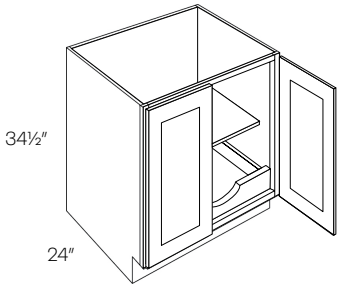

Item Number	Plus Program A	B	C	D	M	N	O	P
B30-FH-POS1	1433	1519	1605	1663	1600	1675	1750	1821
B33-FH-POS1	1509	1601	1691	1756	1689	1772	1850	1925
B36-FH-POS1	1580	1674	1770	1841	1771	1854	1938	2016
B42-FH-POS1	1862	1974	2087	2026	1948	2043	2137	2225

- BLUM glides not available for POS in PLUS program
- Ball bearing soft close glides for POS
- POS has natural finish

Full Height Double Drawer & 4 Door Base Cabinet W/2 POS

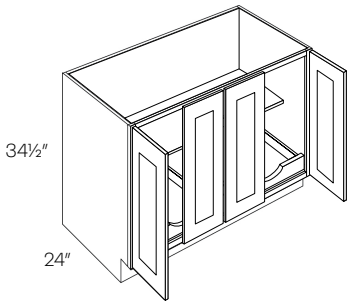

B48-FH-POS2 (Has 2 POS)	1433	1519	1605	2992	2905	3008	3113	2620

- BLUM glides not available for POS in PLUS program
- Has two POS
- Ball bearing soft close glides for POS
- POS has natural finish

Full Height Single Door & Drawer Base Cabinet W/ 2 POS

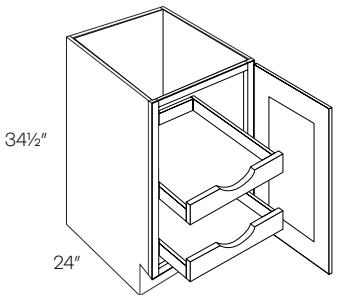

B12-FH-POS2	1119	1186	1253	1297	1258	1305	1350	1393
B15-FH-POS2	1164	1234	1304	1349	1309	1357	1405	1450
B18-FH-POS2	1242	1316	1391	1436	1394	1443	1495	1542
B21-FH-POS2	1351	1433	1512	1567	1520	1576	1632	1685

- BLUM glides not available for POS in PLUS program
- Ball bearing soft close glides for POS
- POS has natural finish

Single Drawer Double Door Base Cabinet W/2 POS

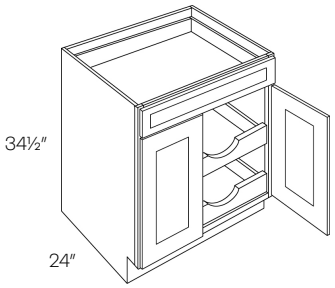

Item Number	A	B	C	Plus Program D	M	N	O	P
B24-POS2	1468	1558	1645	1705	1654	1714	1774	1831
B27-POS2	1569	1665	1758	1827	1771	1837	1904	1966

- BLUM glides not available for POS in PLUS program
- Ball bearing soft close glides for POS
- POS has natural finish

Double Drawer & Door Base Cabinet W/2 POS

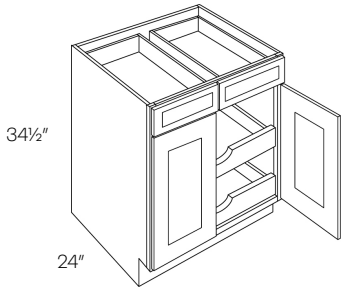

B30-POS2	1720	1823	1927	2007	1944	2019	2094	2165
B33-POS2	1809	1918	2026	2113	2046	2129	2207	2282
B36-POS2	1899	2013	2127	2220	2150	2233	2317	2395
B42-POS2	2430	2577	2722	2421	2343	2438	2532	2620

- BLUM glides not available for POS in PLUS program
- Ball bearing soft close glides for POS
- POS has natural finish

Double Drawer & 4 Door Base Cabinet W/4 POS

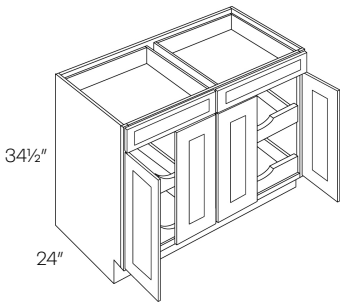

B48-POS4	2685	2848	3009	4176	4089	4192	4297	4394

- BLUM glides not available for POS in PLUS program
- Has four POS
- Ball bearing soft close glides for POS
- POS has natural finish

Full Height Single Drawer Double Door Base Cabinet W/2 POS

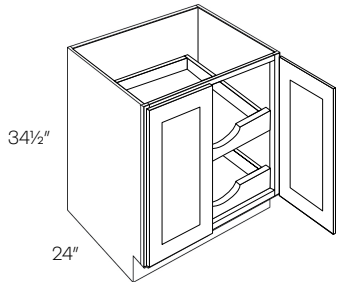

Item Number	A	B	C	D	M	N	O	P
				Plus Program				
B24-FH-POS2	1468	1558	1645	1705	1654	1714	1774	1831
B27-FH-POS2	1569	1665	1758	1827	1771	1837	1904	1966

- BLUM glides not available for POS in PLUS program
- Ball bearing soft close glides for POS
- POS has natural finish

Full Height Double Drawer & Door Base Cabinet W/2 POS

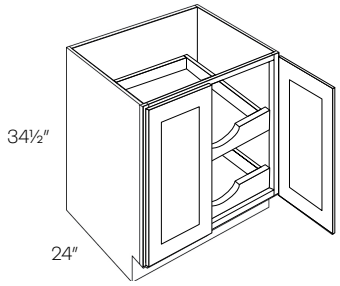

B30-FH-POS2	1720	1823	1927	2007	1944	2019	2094	2165
B33-FH-POS2	1809	1918	2026	2113	2046	2129	2207	2282
B36-FH-POS2	1899	2013	2127	2220	2150	2233	2317	2395
B42-FH-POS2	2430	2577	2722	2421	2343	2438	2532	2620

- BLUM glides not available for POS in PLUS program
- Ball bearing soft close glides for POS
- POS has natural finish

Full Height Double Drawer & 4 Door Base Cabinet W/4 POS

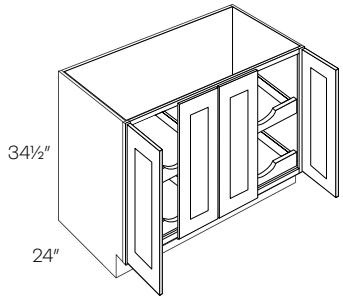

B48-FH-POS4	2685	2848	3009	4176	4089	4192	4297	4394

- BLUM glides not available for POS in PLUS program
- Has four POS
- Ball bearing soft close glides for POS
- POS has natural finish

3 Drawer Base Cabinet

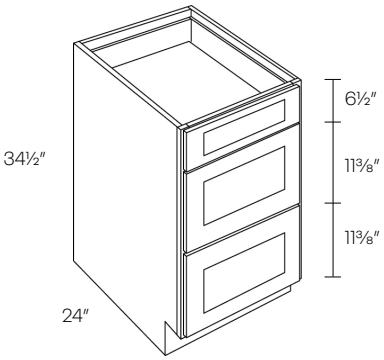

Item Number	A	B	C	Plus Program D	M	N	O	P
DB12	1006	1067	1128	1269	1208	1281	1354	1422
DB15	1047	1110	1172	1320	1257	1332	1407	1478
DB18	1075	1140	1205	1355	1290	1368	1446	1519
DB21	1109	1178	1243	1398	1331	1414	1492	1567
DB24	1146	1216	1286	1445	1376	1460	1544	1622
DB27	1203	1275	1348	1517	1444	1530	1618	1699
DB30	1236	1311	1384	1559	1484	1574	1661	1745
DB33	1297	1375	1453	1635	1557	1650	1744	1832
DB36	1349	1431	1504	1700	1619	1718	1805	1896

Blind Base Cabinet

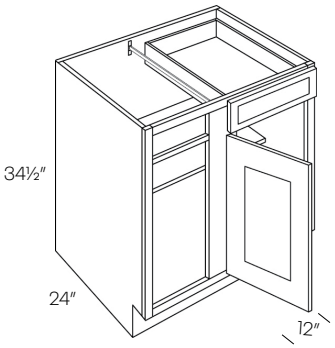

BLB36/39	1100	1166	1232	1386	1320	1400	1479	1553
BLB39/42	1130	1197	1266	1424	1356	1437	1520	1596
BLB42/45	1209	1281	1354	1524	1451	1538	1625	1707
BLB45/48	1315	1395	1474	1657	1578	1674	1769	1858
BLB48/51	1415	1475	1554	1783	1698	1784	1865	1959

- Reversible Left or Right
- Must be pulled to the minimum position

* Left blind shown

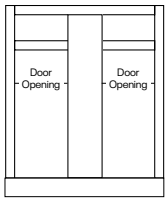

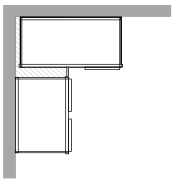

Cabinet	Min. Pull	Max. Pull	Actual Size	Door(s)	Door Opening
BLB36/39	36″	39″	27″	B9	6″
BLB39/42	39″	42″	33″	B12	9″
BLB42/45	42″	45″	39″	B15	12″
BLB45/48	45″	48″	42″	B18	15″
BLB48/51	48″	51″	48″	B39	16.6″

Full Height Blind Base Cabinet

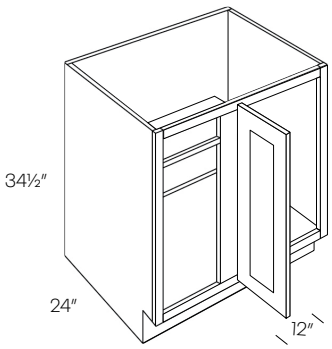

Full Height Door

BLB36/39-FH	1100	1166	1232	1386	1320	1400	1479	1553
BLB39/42-FH	1130	1197	1266	1424	1356	1437	1520	1596
BLB42/45-FH	1209	1281	1354	1524	1451	1538	1625	1707
BLB45/48-FH	1315	1395	1474	1657	1578	1674	1769	1858
BLB48/51-FH	1415	1475	1554	1783	1698	1784	1865	1959

- Reversible Left or Right
- Must be pulled to the minimum position

* Left blind shown

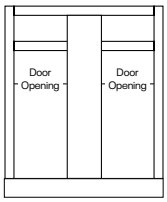

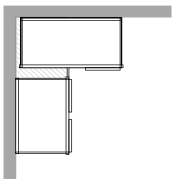

Cabinet	Min. Pull	Max. Pull	Actual Size	Door(s)	Door Opening
BLB36/39-FH	36″	39″	27″	B9	6″
BLB39/42-FH	39″	42″	33″	B12	9″
BLB42/45-FH	42″	45″	39″	B15	12″
BLB45/48-FH	45″	48″	42″	B18	15″
BLB48/51-FH	48″	51″	48″	B39	16.6″

2 Drawer Base Cabinet

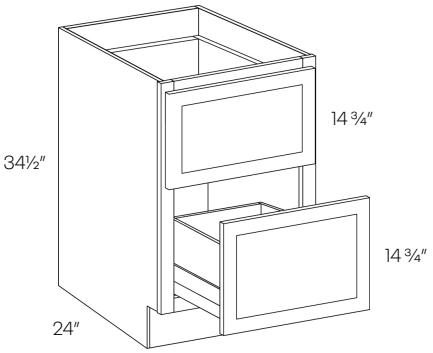

Item Number	A	B	C	Plus Program D	M	N	O	P
DB24-2	1146	1216	1286	1445	1376	1460	1544	1622
DB30-2	1236	1311	1384	1559	1484	1574	1661	1745
DB33-2	1297	1375	1453	1635	1557	1650	1744	1832
DB36-2	1349	1431	1504	1700	1619	1718	1805	1896

Diagonal Corner Sink Base Cabinet

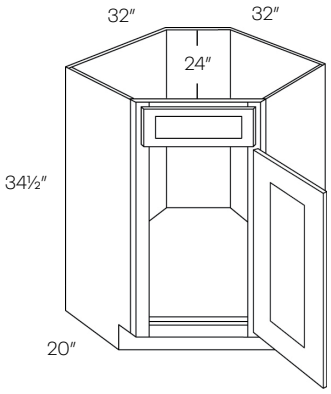

CSB36	1552	1645	1738	1957	1863	1974	2086	2191

• Requires 36″ X 36″ wall space

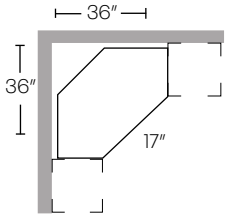

Diagonal Corner Sink Front

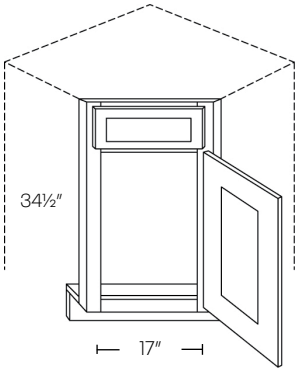

CSF36*	444	471	498	560	533	566	598	628
CSFFL36 (Floor)	155	155	155	196	186	186	186	196

*Requires 36″ X 36″ wall space
*Requires a floor (sold separately)

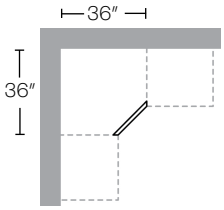

Easy Reach Corner Base Cabinet

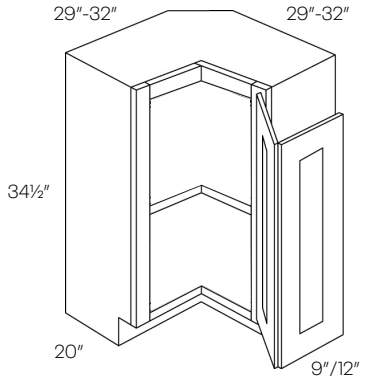

Item Number	A	B	C	Plus Program D	M	N	O	P
BSQC33R	1595	1692	1788	2010	1914	2031	2146	2254
BSQC33L	1595	1692	1788	2010	1914	2031	2146	2254
BSQC36R	1595	1692	1788	2010	1914	2031	2146	2254
BSQC36L	1595	1692	1788	2010	1914	2031	2146	2254

• Requires 33″ X 33″ / 36″ X 36″ wall space

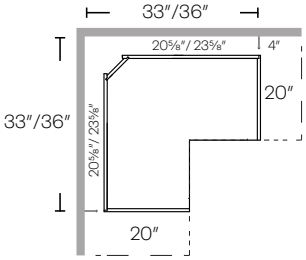

Easy Reach Corner Base Cabinet

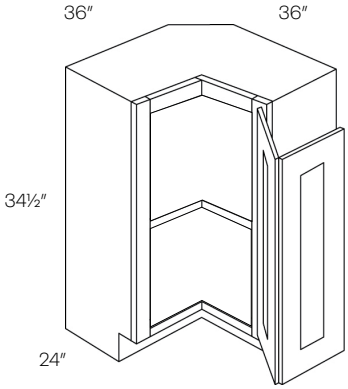

ER36R	1765	1889	2014	2070	2178	2327	2477	2130
ERC36L	1765	1889	2014	2070	2178	2327	2477	2130

• Requires 36″ X 36″ wall space

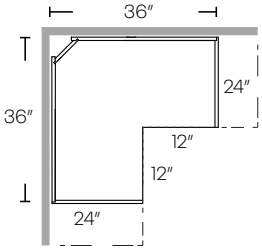

Carousel Corner Base Cabinet

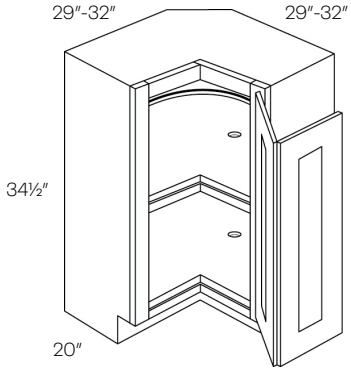

CAR33R	2065	2189	2314	2602	2478	2627	2777	2916
CAR33L	2065	2189	2314	2602	2478	2627	2777	2916
CAR36R	2065	2189	2314	2602	2478	2627	2777	2916
CAR36L	2065	2189	2314	2602	2478	2627	2777	2916

• Requires 33″ X 33″ / 36″ X 36″ wall space
• Pie is 9″ X 9″ / 12″ X 12″
• Wooden Lazy Susan

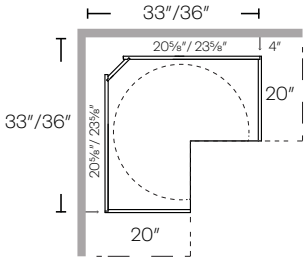

Lazy Susan Corner Base Cabinet

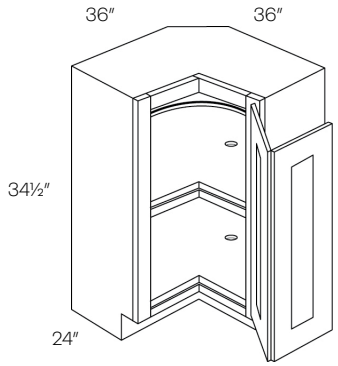

Item Number	A	B	C	Plus Program D	M	N	O	P
LS36R	2065	2189	2314	2602	2478	2603	2777	2916
LS36L	2065	2189	2314	2602	2478	2603	2777	2916

- Requires 36″ X 36″ wall space
- Pie is 2″ X 12″
- Wooden Lazy Susan

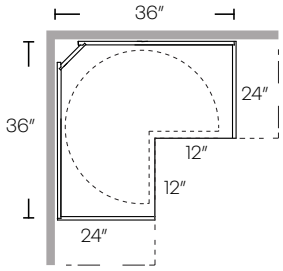

1 Drawer Front 2 Door Sink Base Cabinet

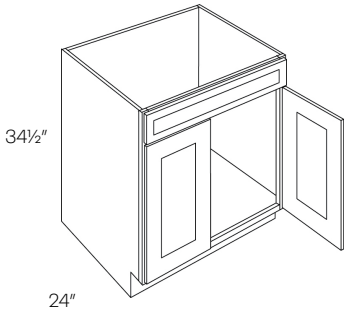

SB24	777	823	870	980	933	988	1044	1097
SB27	839	890	940	1058	1007	1068	1128	1185
TOT*	243	243	243	243	243	243	243	243

* Factory Installed

Tilt out tray

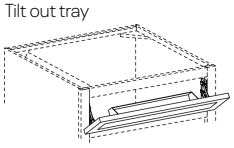

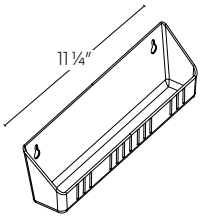

Double Drawer Front 2 Door Sink Base Cabinet

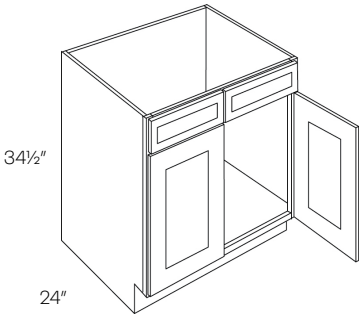

SB30	888	941	995	1120	1066	1130	1194	1254
SB33	949	1006	1062	1196	1139	1208	1275	1339
SB36	959	1017	1075	1209	1151	1221	1290	1355
SB39	1023	1084	1145	1290	1228	1301	1374	1443
SB42	1047	1110	1172	1320	1257	1332	1407	1478
TOT*	243	243	243	243	243	243	243	243

*Factory Installed
*Cabinets include two 11¼″ tilt out trays

Tilt out tray

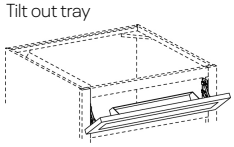

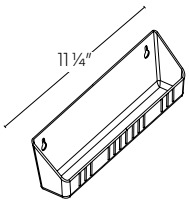

	Item Number	A	B	C	Plus Program D	M	N	O	P
Double Drawer Front 4 Door Sink Base Cabinet	**SB48**	1171	1243	1313	1477	1406	1492	1576	1655

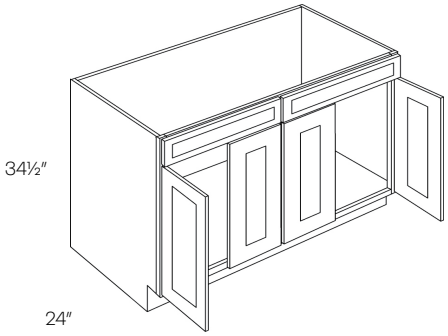

Double Door Farm Sink Base Cabinet	**SB30-FS**	944	999	1052	1190	1133	1199	1263	1327
	SB33-FS	1006	1063	1120	1269	1208	1276	1344	1412
	SB36-FS	1016	1075	1132	1281	1220	1290	1359	1427

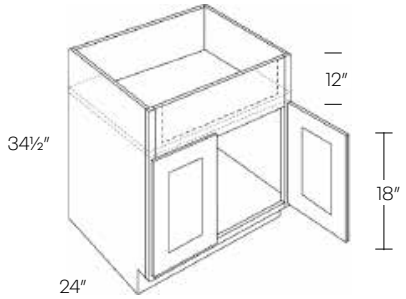

- Max trimmable 27″/30″/33″ X 10″
- Trimming to be done in field
- Has a fixed platform

Double Door Handicap Removable Sink Base Cabinet	**SB30-HR**	1329	1410	1488	1675	1595	1692	1786	1876
	SB33-HR	1386	1472	1554	1748	1664	1767	1865	1959
	SB36-HR	1443	1530	1616	1819	1732	1836	1940	2037

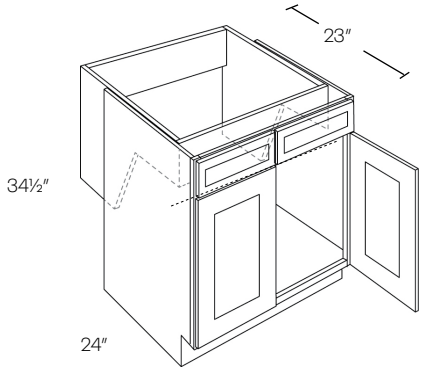

* Factory Installed
**Not ADA compliant

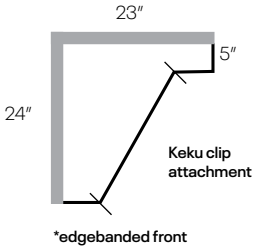

Oven Base & Microwave Base Cabinet

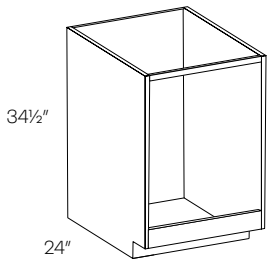

OVB

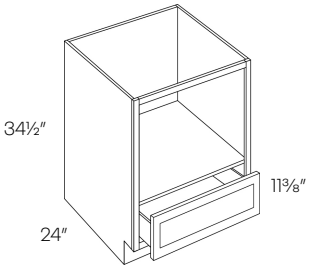

MCB

Item Number	A	B	C	Plus Program D	M	N	O	P
OVB30	681	721	762	859	818	866	915	961
MCB24	1146	1216	1286	1445	1376	1460	1544	1622
MCB24-TRM	250	250	250	315	300	300	300	315
MCB27	1191	1264	1335	1502	1430	1517	1602	1683
MCB27-TRM	275	275	275	347	330	330	330	347
MCB30*	1236	1311	1384	1559	1484	1574	1661	1745
MCB30-TRM	300	300	300	378	360	360	360	378

- OV front opening is 27″x27″
- MC front opening is
  MCB24 - 21″x16″
  MCB27 - 24″x16″
  MCB30 - 27″x16″

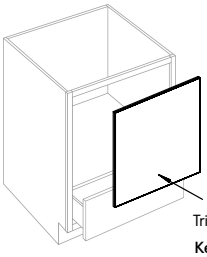

Base End Cabinet

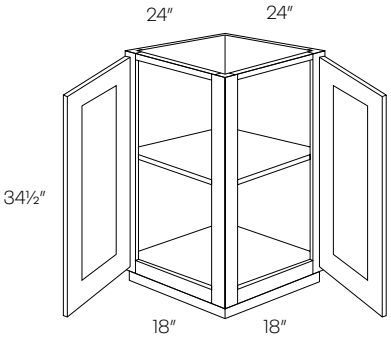

BEC24	784	832	878	989	941	999	1054	1107

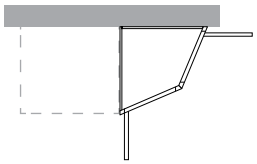

	Item Number	A	B	C	Plus Program D	M	N	O	P
Straight Base End Cabinet	**BECS24**	784	832	878	989	941	999	1054	1107

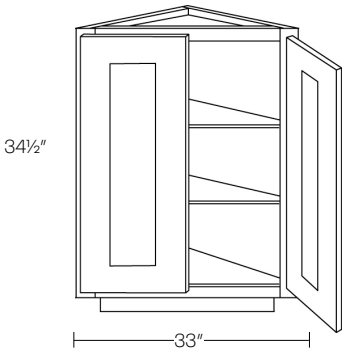

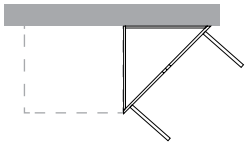

Angle Base End Cabinet	**BTC2412**	636	674	712	803	764	809	855	898

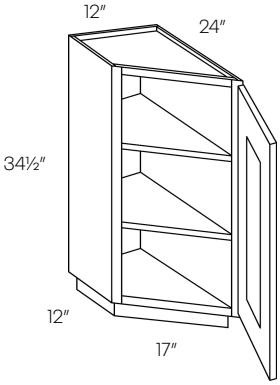

- Reversible
- Loose toe kick
- Hinged on 24″

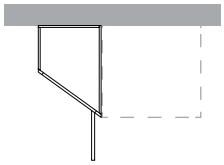

Base Spice Cabinet	**BSP6**	528	560	592	666	634	672	711	747
	BSP9	1075	1140	1205	1355	1290	1368	1446	1519

- BLUM glides not available in PLUS program

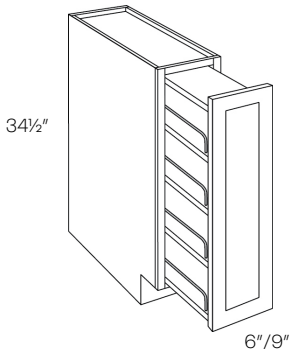

Waste Basket Cabinet

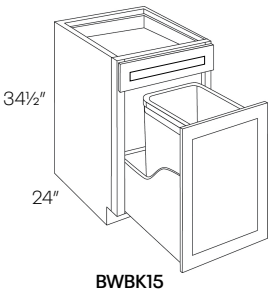

BWBK15

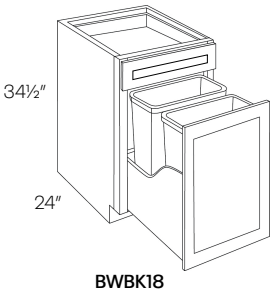

BWBK18

Item Number	A	B	C	Plus Program D	M	N	O	P
BWBK15 (Single basket)	1076	1141	1206	1357	1292	1370	1448	1521
BWBK18 (Double basket)	1140	1208	1276	1437	1368	1450	1532	1609

- BLUM glides not available in PLUS program
- Soft-close hinges and glides
- Includes 35qt. waste basket (BK18 includes two waste baskets)
- Full Height Waste Basket includes two 50qt. waste baskets

Full Height Waste Basket Cabinet

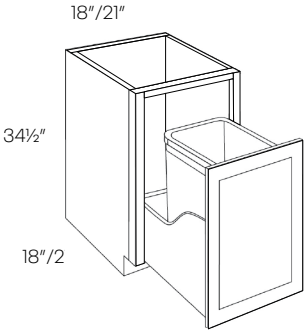

BWBK15-FH

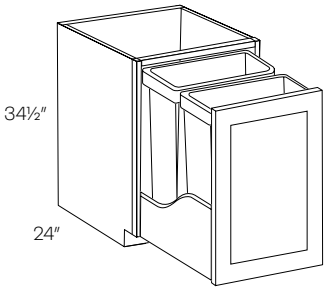

BWBK21-FH/ BWBK18-FH

BWBK15-FH (Single basket)	1076	1141	1206	1357	1292	1370	1448	1521
BWBK18-FH (Double basket)	1140	1208	1276	1437	1368	1450	1532	1609
BWBK21-FH	1394	1477	1560	1757	1673	1773	1872	1966

- BLUM glides not available in PLUS program
- Soft-close hinges and glides
- Includes 35qt. waste basket (BK18 includes two waste baskets)
- Full Height Waste Basket includes two 50qt. waste baskets

Single Door Utility Cabinet

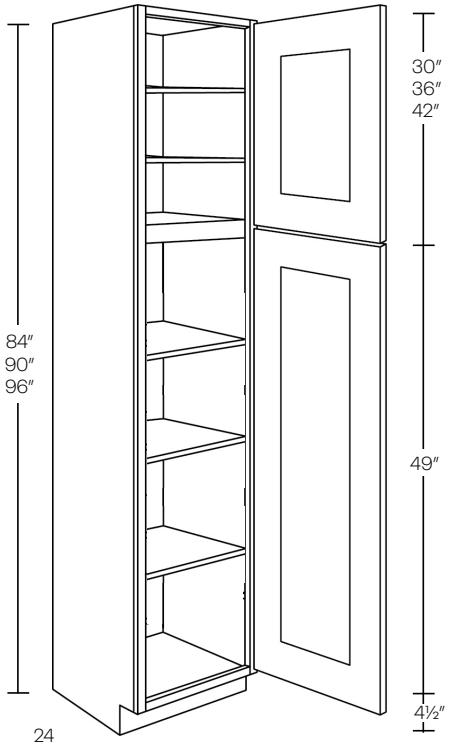

Item Number	A	B	C	Plus Program D	M	N	O	P
UC1521X84	1905	2020	2134	2401	2286	2424	2561	2690
UC1524X84	1905	2020	2134	2401	2286	2424	2561	2690
UC1524X90	2097	2223	2348	2643	2517	2668	2818	2959
UC1524X96*	2306	2445	2583	2907	2768	2934	3100	3255
UC1821X84	2007	2128	2249	2530	2409	2554	2699	2834
UC1824X84	2007	2128	2249	2530	2409	2554	2699	2834
UC1824X90	2102	2341	2473	2650	2523	2810	2968	3117
UC1824X96*	2428	2575	2720	3060	2914	3090	3264	3428
POS15-3 (factory installed)	743	743	743	743	743	743	743	743
POS15-4 (factory installed)	1002	1002	1002	1002	1002	1002	1002	1002
POS18-3 (factory installed)	1045	1045	1045	1045	1045	1045	1045	1045
POS18-4 (factory installed)	1088	1088	1088	1088	1088	1088	1088	1088

- BLUM glides not available for POS in PLUS program
- POS price is addition to cabinet list price
- POS uses dovetail construction
- POS has natural finish
- 4 bottom adjustable shelves

*84″ and 90″ have 2 upper shelves
* 96″ has 3 upper shelves

Pull Out Shelf

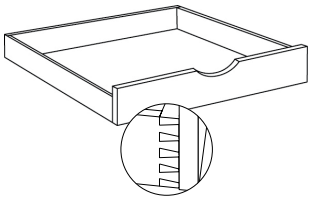

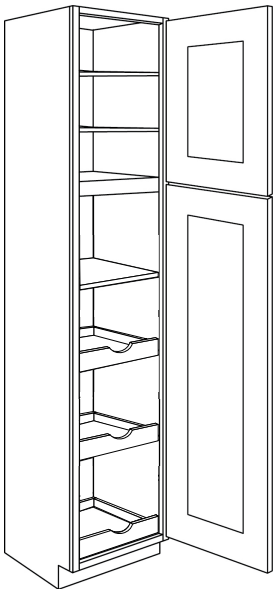

POS-3

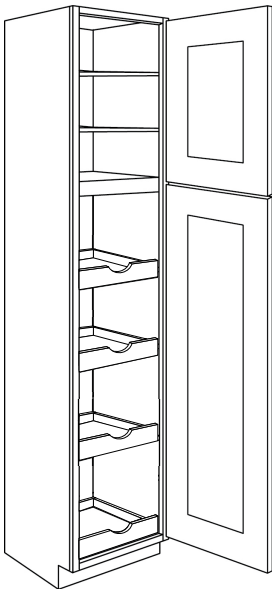

POS-4

Double Door Utility Cabinet

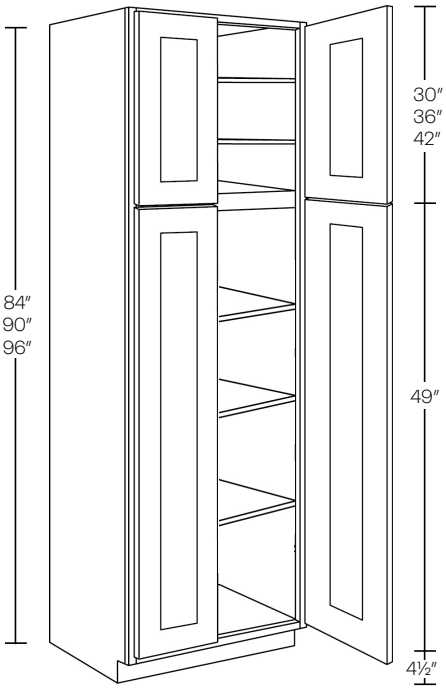

Item Number	Plus Program A	B	C	D	M	N	O	P
UC2412X84	2068	2194	2317	2607	2482	2633	2781	2921
UC2412X90	2275	2412	2549	2867	2730	2895	3059	3212
UC2412X96*	2502	2653	2802	3154	3003	3184	3363	3532
UC2424X84	2344	2486	2625	2954	2813	2984	3150	3308
UC2424X90	2580	2735	2890	3251	3096	3282	3468	3642
UC2424X96*	2838	3008	3178	3577	3406	3610	3814	4005
UC3024X84	2478	2734	2889	3123	2974	3281	3467	3641
UC3024X90	2839	3009	3180	3578	3407	3611	3816	4007
UC3024X96*	3119	3307	3494	3931	3743	3969	4193	4403
POS24-3 (factory installed)	989	989	989	989	989	989	989	989
POS24-4 (factory installed)	1253	1253	1253	1253	1253	1253	1253	1253
POS30-3 (factory installed)	1301	1301	1301	1301	1301	1301	1301	1301
POS30-4 (factory installed)	1349	1349	1349	1349	1349	1349	1349	1349

- BLUM glides not available for POS in PLUS program
- POS price is addition to cabinet list price
- POS uses dovetail construction
- POS has natural finish
- 4 bottom adjustable shelves
- POS only available in 24″ deep

*84″ and 90″ have 2 upper shelves
* 96″ has 3 upper shelves

Pull Out Shelf

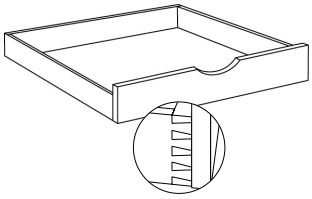

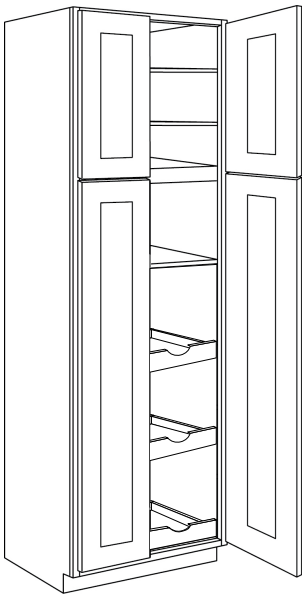

POS-3

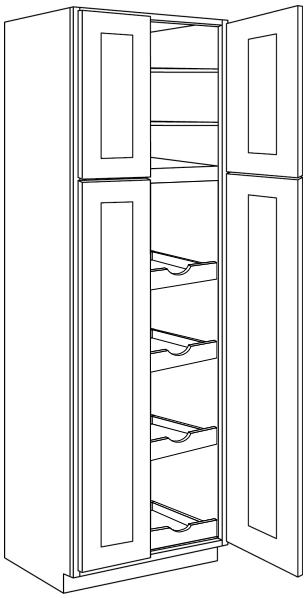

POS-4

cnc cabinetry

Single Oven Cabinet

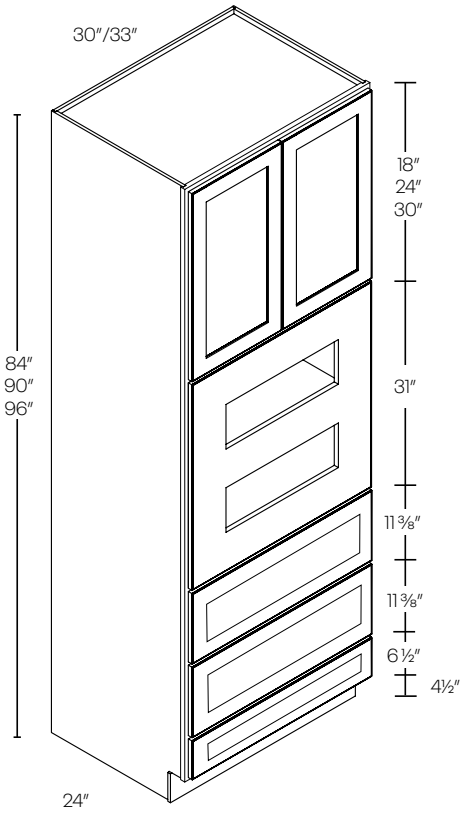

Item Number	Plus Program A	B	C	D	M	N	O	P
OV3084	2397	2541	2685	3021	2877	3050	3222	3384
OV3090	2547	2701	2852	3210	3057	3242	3423	3595
OV3096*	2694	2855	3017	3395	3233	3426	3621	3803
OV3384	2493	2643	2792	3142	2992	3172	3351	3519
OV3390	2648	2807	2967	3337	3178	3369	3561	3740
OV3396**	2801	2970	3138	3531	3362	3564	3766	3955
OV30-TRM	500	500	500	441	420	420	420	441
OV33-TRM	540	540	540	467	444	444	444	467

- Trimming to be done in field
- 84″ and 90″ has 1 upper shelves
- 96″ has 2 upper shelves
- Remove drawers and floor as needed
- Center panel included

*Maximum cut out width is 27″ wide on 30″
**Maximum cut out width is 30″ wide on 33″

Assembly

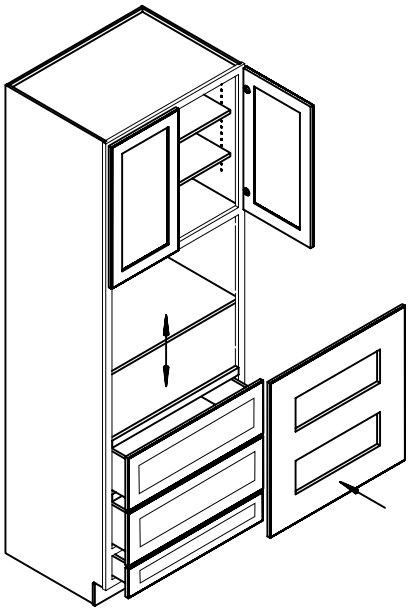

Side

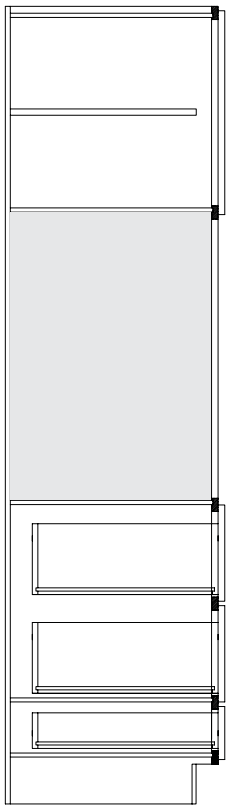

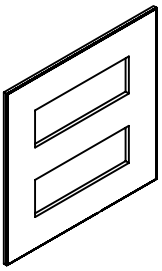

Trim Kit
Keku clip attachment
*Clips shipped loose

Double Oven Cabinet

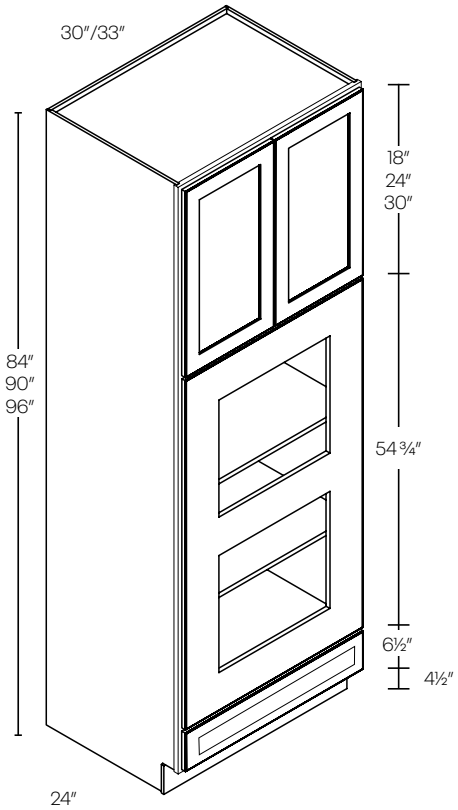

Item Number	A	B	C	D	M	N	O	P
				Plus Program				
OVD3084	2397	2541	2685	3021	2877	3050	3222	3384
OVD3090	2547	2701	2852	3210	3057	3242	3423	3595
OVD3096*	2694	2855	3017	3395	3233	3426	3621	3803
OVD3384	2493	2643	2792	3142	2992	3172	3351	3519
OVD3390	2648	2807	2967	3337	3178	3369	3561	3740
OVD3396*	2801	2970	3138	3531	3362	3564	3766	3955
OVD30-TRM	500	500	500	630	600	600	600	630
OVD33-TRM	540	540	540	681	648	648	648	681

- Trimming to be done in field
- Shelves need to be adjusted and secured with screws
- 84″ ad 90″ has 1 upper shelves
- 96″ has 2 upper shelves
- Center panel included

*Maximum cut out width is 27″ wide on 30″
**Maximum cut out width is 30″ wide on 33″

Assembly

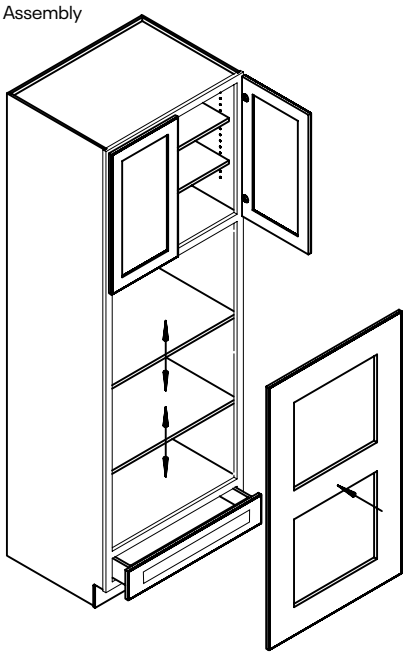

Side

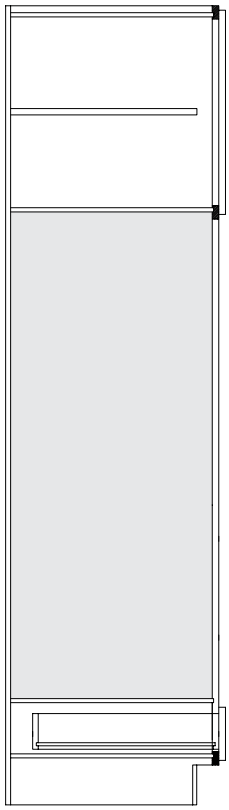

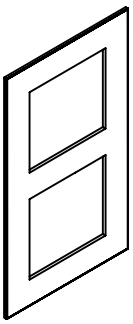

Trim Kit

Keku clip attachment
*Clips shipped loose

Floating Shelves

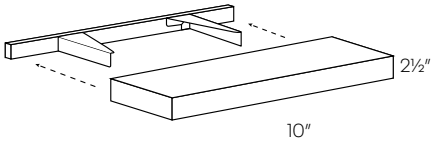

Item Number	A	B	C	Plus Program D	M	N	O	P
F-SHELF-24	483	483	483	609	580	580	580	609
F-SHELF-30	576	576	576	727	692	692	692	727
F-SHELF-36	668	668	668	843	802	802	802	843
F-SHELF-42	760	760	760	958	912	912	912	958

• Mounting hardware included

Pull Out Shelf

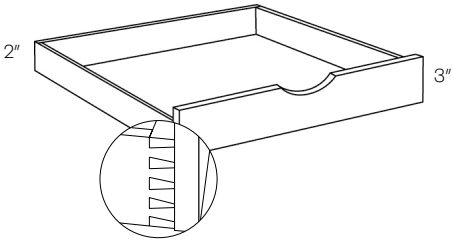

POS12	198	198	198	198	198	198	198	198
POS15	207	207	207	207	207	207	207	207
POS18	228	228	228	228	228	228	228	228
POS21	240	240	240	240	240	240	240	240
POS24	271	271	271	271	271	271	271	271
POS27	282	282	282	282	282	282	282	282
POS30	294	294	294	294	294	294	294	294
POS33	307	307	307	307	307	307	307	307
POS36	329	329	329	329	329	329	329	329
POS42	345	345	345	345	345	345	345	345

• Ball bearing soft-close glides included
• POS uses dovetail construction with a natural finish
•Natural finish

Wooden Cutlery Divider

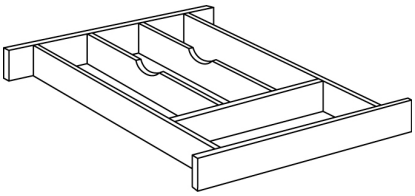

WCD-14	202	202	202	202	202	202	202	202
WCD-16	215	215	215	215	215	215	215	215
WCD-25	223	223	223	223	223	223	223	223
WCD-7	242	242	242	242	242	242	242	242

• To be trimmed on site
* Need to buy 2 pieces

WCD-14	B33*, B39*, BLB48/51
WCD-16	B15, B18, B21, B36*
WCD-25	B24, B27, DB30
WCD-7	B12, BLB39/42

Boxed Wood Hood

Item Number	A	B	C	D	M	N	O	P
				Plus Program				
WHB30	2500	2500	2500	3150	3000	3000	3000	3150
WHB36	3000	3000	3000	3780	3600	3600	3600	3780

•Metal Liners Included

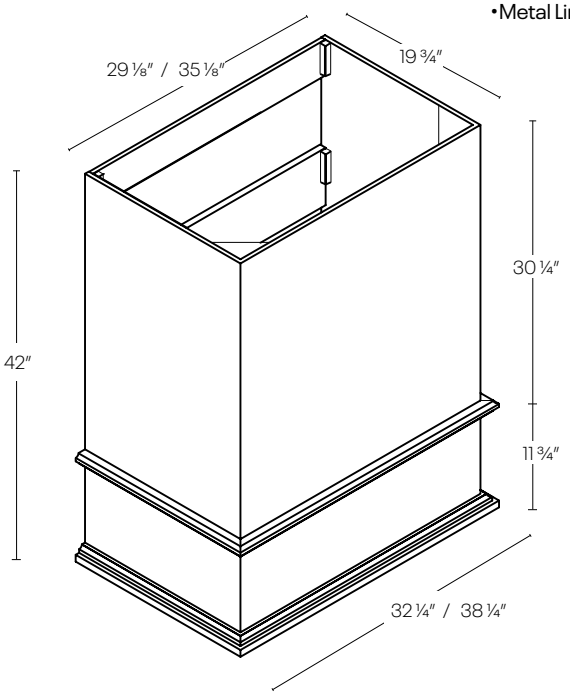

30″ Hood Liner

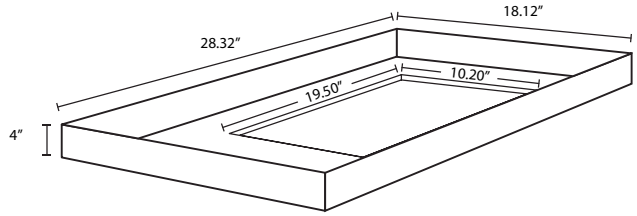

36″ Hood Liner

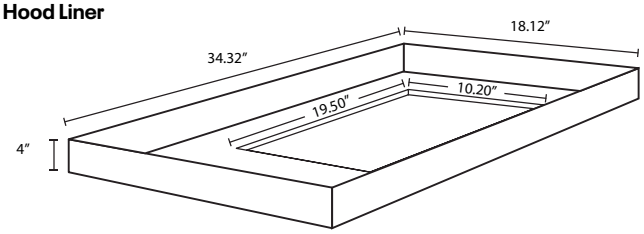

Coved Wood Hood

WHC30	2500	2500	2500	3150	3000	3000	3000	3150
WHC36	3000	3000	3000	3780	3600	3600	3600	3780

•Metal Liners Included

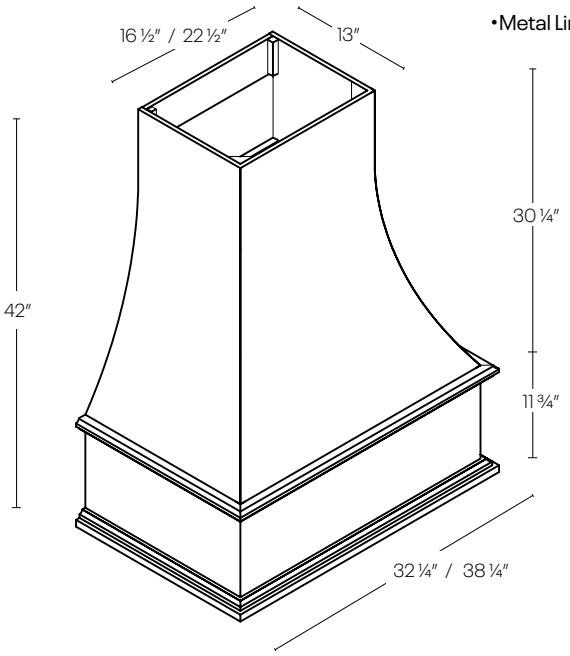

30″ Hood Liner

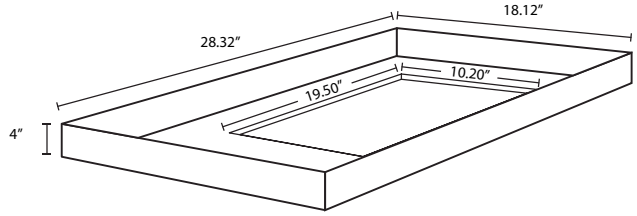

36″ Hood Liner

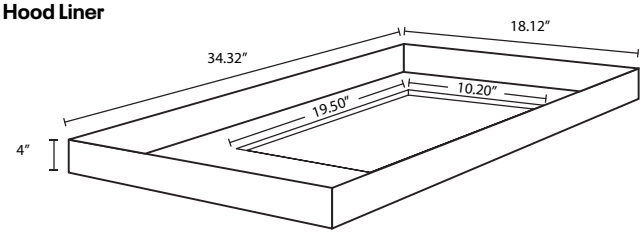

Sloped Wood Hood

Item Number	A	B	C	D	M	N	O	P
				Plus Program				
WHS30	2500	2500	2500	3150	3000	3000	3000	3150
WHS36	3000	3000	3000	3780	3600	3600	3600	3780

•Metal Liners Included

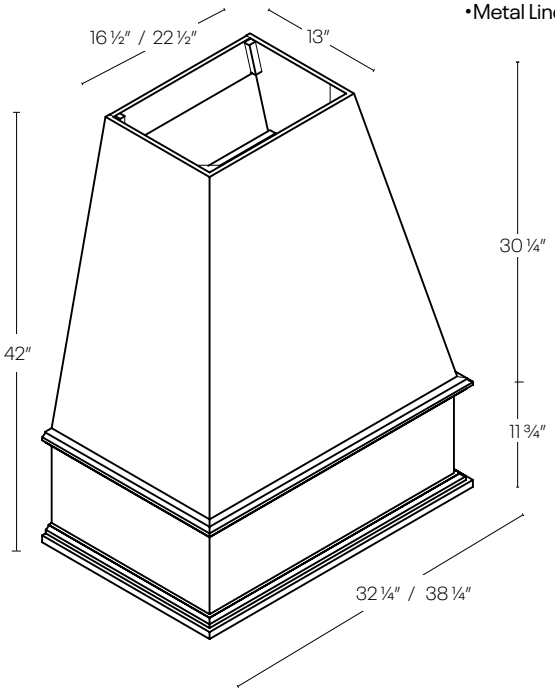

30″ Hood Liner

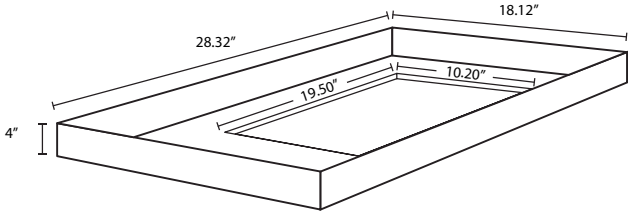

36″ Hood Liner

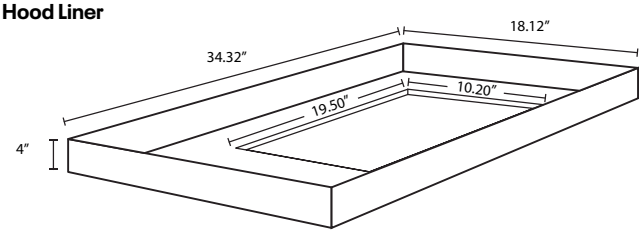

Traditional Wood Hood

WHT30	2500	2500	2500	3150	3000	3000	3000	3150
WHT36	3000	3000	3000	3780	3600	3600	3600	3780

•Metal Liners Included

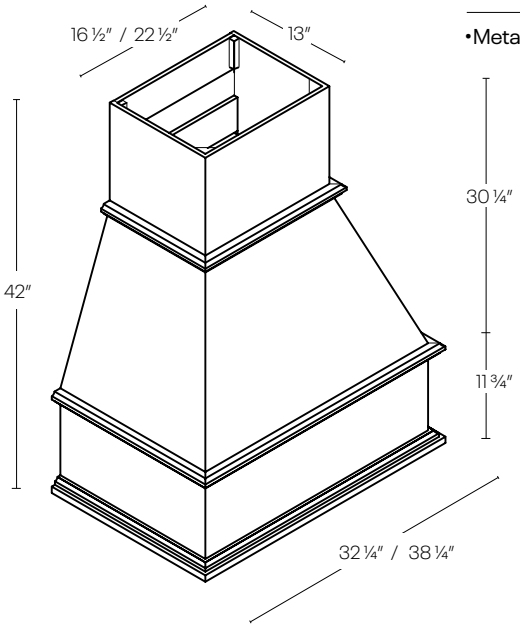

30″ Hood Liner

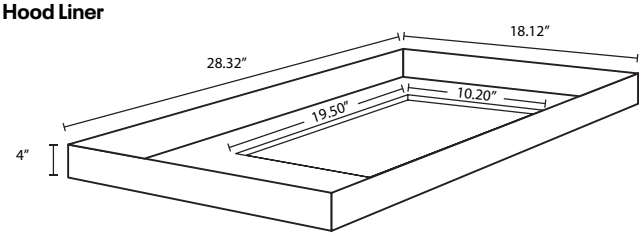

36″ Hood Liner

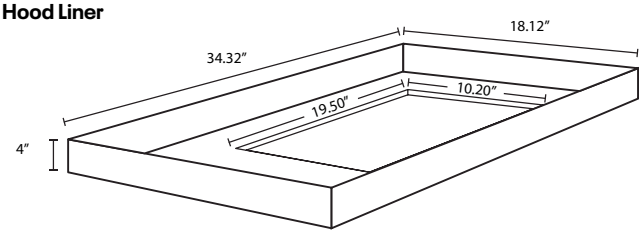

Single Door Vanity Sink Base Cabinet

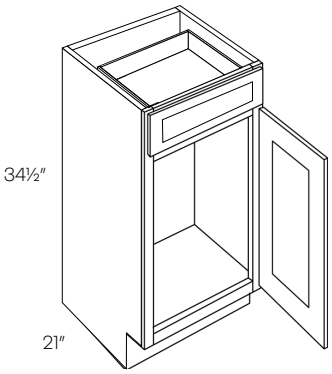

Item Number	A	B	C	D	M	N	O	P
				Plus Program				
VB12	525	551	579	768	731	731	807	848
VB15	550	578	604	803	764	764	843	886
VB18	576	605	636	836	796	796	878	922

Double Door Vanity Sink Base Cabinet

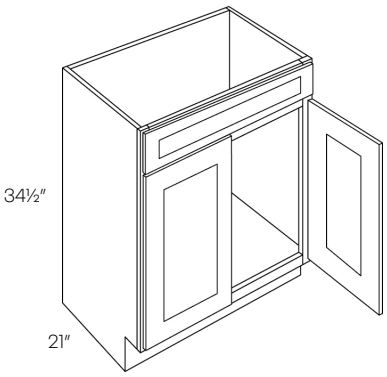

V24	718	761	805	906	862	914	966	1015
V27	766	812	853	966	920	920	1024	1076
V30	814	864	913	1026	977	1037	1096	1151
V33	857	929	955	1081	1029	1029	1146	1204
V36	900	954	1008	1134	1080	1145	1210	1271
V42	1002	1049	1102	1263	1203	1259	1323	1390

1 Door 2 Drawer Vanity Sink Base Cabinet

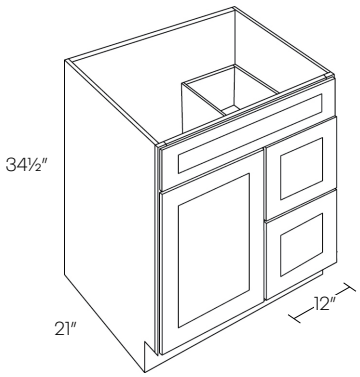

V30DL	1146	1216	1286	1445	1376	1460	1544	1622
V30DR	1146	1216	1286	1445	1376	1460	1544	1622

• Right Drawer Shown

2 Door 2 Drawer Vanity Sink Base Cabinet

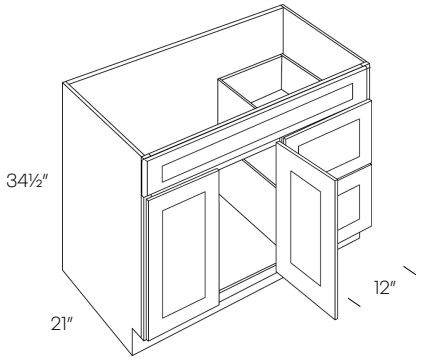

Item Number	A	B	C	Plus Program D	M	N	O	P
V36DL	1178	1247	1318	1485	1414	1497	1582	1662
V36DR	1178	1247	1318	1485	1414	1497	1582	1662
V42DL	1317	1397	1476	1661	1581	1677	1772	1861
V42DR	1317	1397	1476	1661	1581	1677	1772	1861

• Right Drawer Shown

Double Door 4 Drawer Vanity Sink Base Cabinet

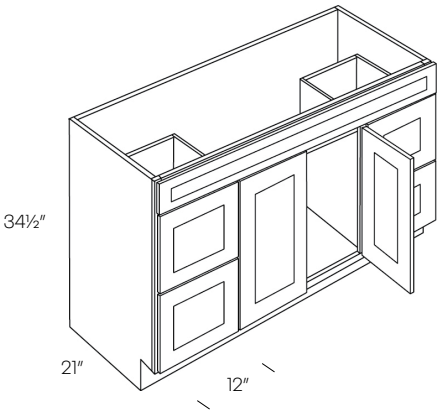

V48DD	1434	1520	1606	1808	1721	1824	1928	2025

Vanity Drawer Base Cabinet

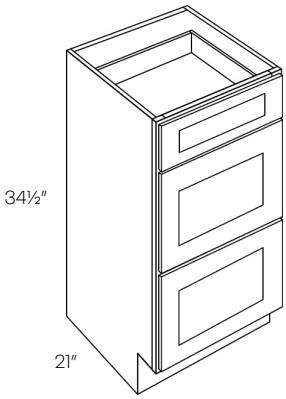

VDB12	907	939	1028	1144	1089	1127	1234	1296
VDB15	947	1003	1060	1194	1137	1204	1272	1336
VDB18	968	1026	1084	1221	1162	1232	1301	1367
VDB21	1010	1061	1114	1273	1212	1274	1337	1404
VDB24	1055	1108	1164	1330	1266	1330	1397	1467

Desk Cabinet

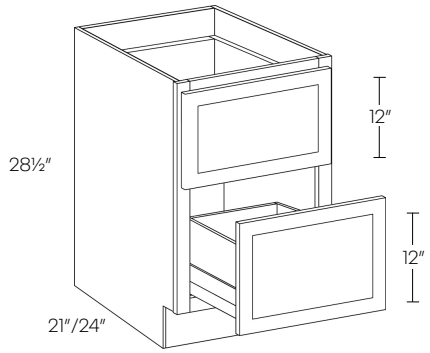

Item Number	A	B	C	Plus Program D	M	N	O	P
DDC18x21	969	1026	1084	1222	1163	1232	1301	1367
DDC18x24	1075	1140	1208	1355	1290	1368	1450	1523

• Does not hold files

Desk Drawer

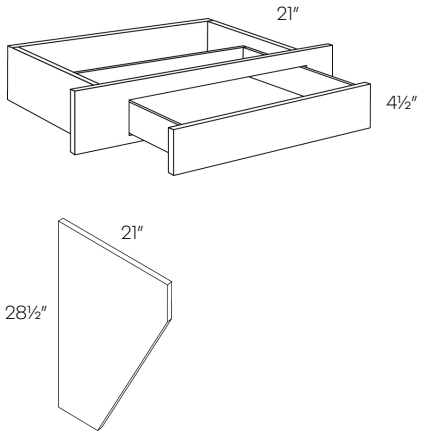

DD30	319	338	357	403	383	406	429	451
DS	203	203	203	257	244	244	244	257

• 2 ½″ trimmable sides
• Drawer front is 22 ½″ wide
• Slab drawer front
• DS is 21″

Finished Skin

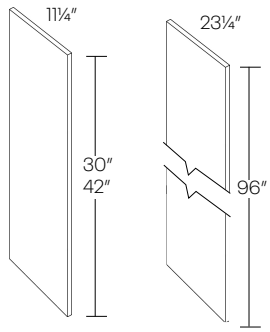

FS30/FS42 FS9624

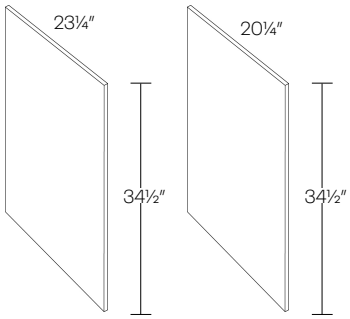

FSB FSV

Item Number	Plus Program A	B	C	D	M	N	O	P
FS30	107	107	107	136	129	129	129	136
FS42	149	149	149	188	179	179	179	188
FS9624	283	283	283	357	340	340	340	357
FSB	139	139	139	176	166	166	166	176
FSV	139	139	139	175	166	166	166	175

• ¼″ Thick

Plywood Panel

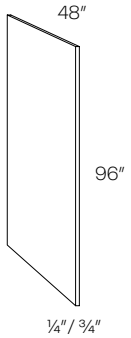

PLY4X8.25	410	410	410	517	492	492	492	517
PLY4X8.75	1323	1323	1323	1669	1588	1588	1588	1669

Refrigerator End Panel

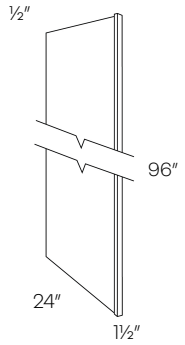

REP1

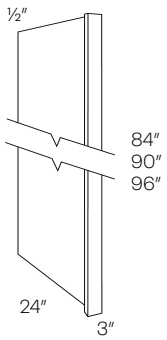

REP3

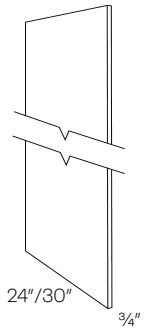

UREP

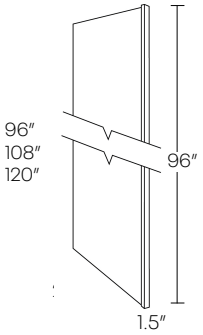

UREP 1.5x96x27

Item Number	Plus Program A	B	C	D	M	N	O	P
REP196	518	518	518	654	622	622	622	654
REP384	470	470	470	593	564	564	564	593
REP390	494	494	494	623	593	593	593	623
REP396	518	518	518	654	622	622	622	654
UREP24	361	361	361	456	434	434	434	456
UREP30	480	480	480	605	576	576	576	605
UREP24-9	406	406	406	513	488	488	488	513
UREP30-9	540	540	540	681	648	648	648	681
UREP24-10	457	457	457	577	549	549	549	577
UREP30-10	608	608	608	767	730	730	730	767
UREP1.5x96x27	540	540	540	675	648	648	648	675
UREP1.5x96x30	570	570	570	720	720	720	720	720

• Finished on one side

Dishwasher Return Panel

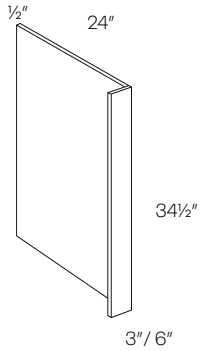

DWR

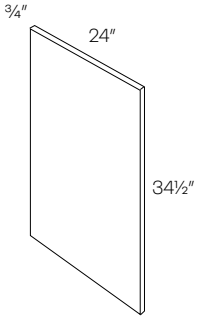

BEP

DWR1	272	272	272	299	327	327	327	299
DWR3	272	272	272	344	327	327	327	344
DWR6	302	302	302	382	363	363	363	382
BEP	238	238	238	301	286	286	286	301

	Item Number	A	B	C	D	M	N	O	P
					Plus Program				
Full Overlay Crown Moldings	**MFLOCR**	400	400	400	501	477	477	477	501

• 8 Feet long

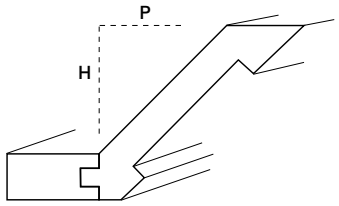

MFLOCR
Height: 3½″
Projection: 2½″

Royal Crown Molding	**RCRM**	397	397	397	N/A	477	477	477	N/A
	RCRMS	397	397	397	N/A	477	477	477	N/A
	RCRMC	397	397	397	501	477	477	477	501
	RCRMR	397	397	397	501	477	477	477	501

• 8 Feet long

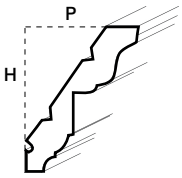

RCRM
Height: 3½″
Projection: 2½″

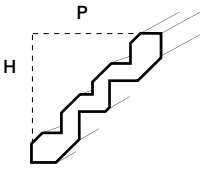

STEP
RCRMS
Height: 3⅛″
Projection: 3⅛″

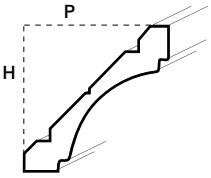

COVE
RCRMC
Height: 3⅛″
Projection: 3⅛″

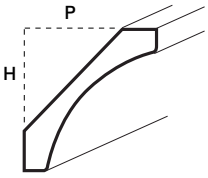

ROUND
RCRMR
Height: 3 ¼″
Projection: 3 ¼″

Light Rail Molding	**LTRM**	275	275	275	N/A	330	330	330	N/A
	LTRMS	275	275	275	N/A	330	330	330	N/A
	LTRM1	207	207	207	262	249	249	249	262

• 8 Feet long

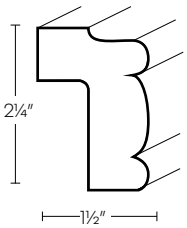

LTRM

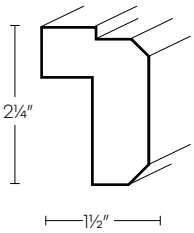

LTRMS

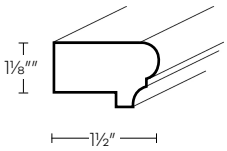

LTRM1

	Item Number	A	B	C	D	M	N	O	P
					Plus Program				
Shoe Molding	**SHM**	119	119	119	151	143	143	143	151
Crown Moldings	**CRM**	141	141	141	N/A	170	170	170	N/A
	CRMS	141	141	141	N/A	170	170	170	N/A
Trim Molding	**TBMS**	130	130	130	164	156	156	156	164

Shoe Molding

- 8 Feet long

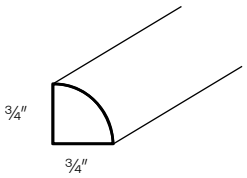

Crown Moldings

- 8 Feet long

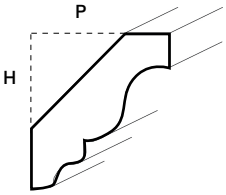

CRM
Height: 2″
Projection: 2″

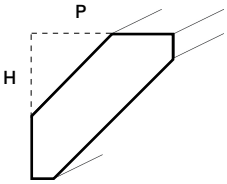

CRMS
Height: 2″
Projection: 2″

Trim Molding

- 8 Feet long

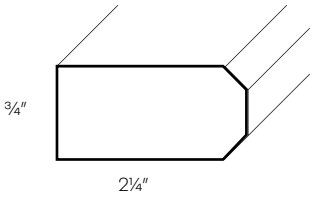

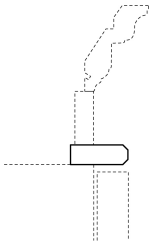

*Suggested use

	Item Number	A	B	C	Plus Program D	M	N	O	P
Corner Molding	**OCM**	107	107	107	136	129	129	129	136
	OCM135	107	107	107	136	129	129	129	136
	ICM	107	107	107	136	129	129	129	136

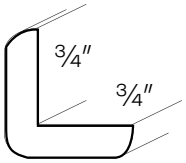

OCM

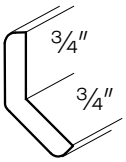

OCM135

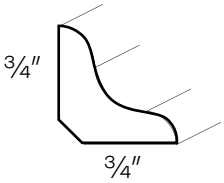

ICM

Toe Kick	**TKS**	89	89	89	113	107	107	107	113

• 8 Feet long

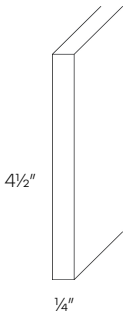

Scribe / Batten Molding	**SCM**	87	87	87	111	105	105	105	111
	BAT	87	87	87	111	105	105	105	111

• 8 Feet long

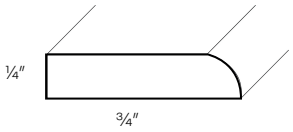

SCM

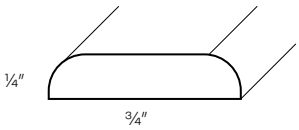

BAT

Filler

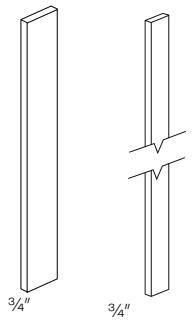

F330/F630/ F342/F642 F396/F696

Item Number	A	B	C	D	M	N	O	P
				Plus Program				
F330	52	52	52	67	63	63	63	67
F630	89	89	89	113	107	107	107	113
F342	68	68	68	87	82	82	82	87
F642	120	120	120	152	144	144	144	152
F396	160	160	160	202	192	192	192	202
F696	265	265	265	334	318	318	318	334

• Fillers finished on all 4 sides

Base Molding

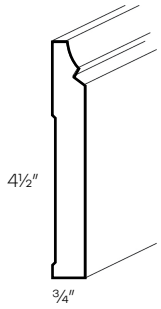

BSMS	283	283	283	357	340	340	340	357

• 8 Feet long

Column

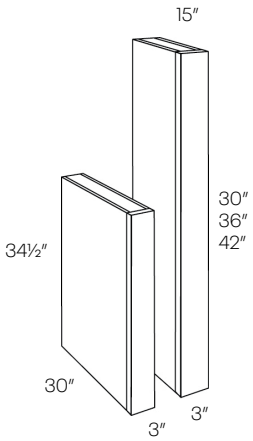

CLM-B30 (34½″H X 30″D)	451	451	451	570	542	542	542	570
CLM-30X15 (30″H X 15″D)	228	228	228	288	274	274	274	288
CLM-36X15 (36″H X 15″D)	255	255	255	322	306	306	306	322
CLM-42X15 (42″H X 15″D)	283	283	283	357	340	340	340	357

• Trimmable
• Finished 3 sides

Arched Valance

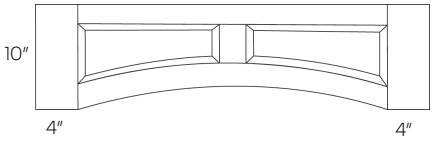

VALPR - Raised panel

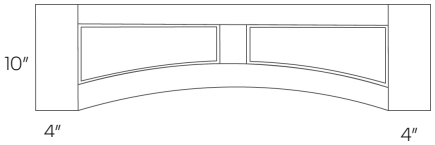

VALP - Flat panel

Item Number	A	B	C	Plus Program D	M	N	O	P
VALP-36	238	238	238	N/A	286	286	286	N/A
VALP-42	264	264	264	N/A	317	317	317	N/A
VALP-48	300	300	300	N/A	360	360	360	N/A
VALP-60	353	353	353	N/A	424	424	424	N/A
VALPR-36	238	238	238	N/A	286	286	286	N/A
VALPR-42	264	264	264	N/A	317	317	317	N/A
VALPR-48	300	300	300	N/A	360	360	360	N/A
VALPR-60	353	353	353	N/A	424	424	424	N/A

• 2″ Trimmable on both sides

Post

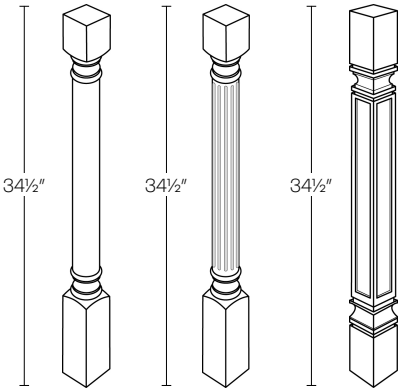

POST-P POST-F POST-S

POST-P	683	683	683	N/A	820	820	820	N/A
POST-F	735	735	735	N/A	882	882	882	N/A
POST-S	1103	1103	1103	1391	1324	1324	1324	1391

• 3″ X 3″

Large Post

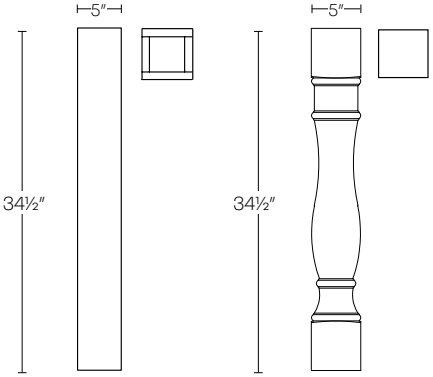

POST5-C POST5-R

POST5-C	887	887	887	1119	1065	1065	1065	1119
POST5-R	992	992	992	N/A	1191	1191	1191	N/A

• 5″ X 5″

Corner Post

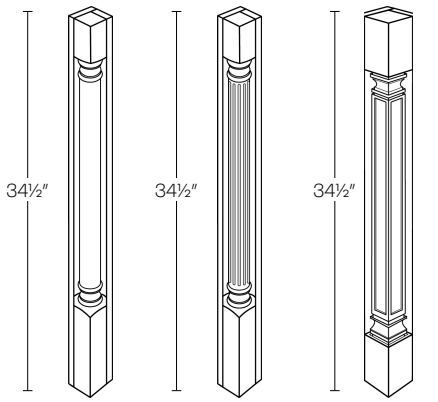

POST-P-CR POST-F-CR POST-S-CR

Item Number	A	B	C	Plus Program D	M	N	O	P
POST-P-CR	392	392	392	N/A	471	471	471	N/A
POST-F-CR	392	392	392	N/A	471	471	471	N/A
POST-S-CR	392	392	392	495	471	471	471	495

• 3″ X 3″

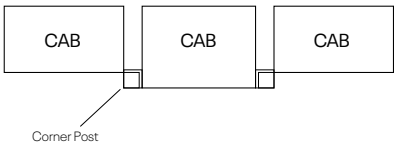

Spindle

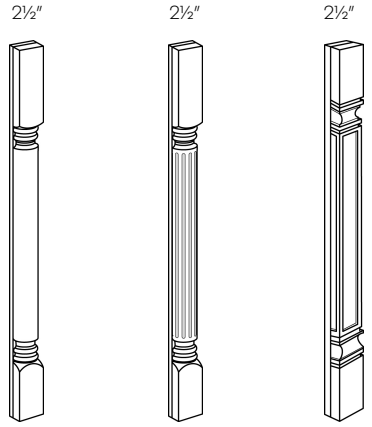

SPIN-P SPIN-F SPIN-S

SPIN-P-30	203	203	203	N/A	244	244	244	N/A
SPIN-P-36	259	259	259	N/A	311	311	311	N/A
SPIN-P-42	300	300	300	N/A	360	360	360	N/A
SPIN-F-30	203	203	203	N/A	244	244	244	N/A
SPIN-F-36	259	259	259	N/A	311	311	311	N/A
SPIN-F-42	300	300	300	N/A	360	360	360	N/A
SPIN-S-30	203	203	203	N/A	244	244	244	N/A
SPIN-S-36	259	259	259	N/A	311	311	311	N/A
SPIN-S-42	300	300	300	N/A	360	360	360	N/A

• To be applied on top of filler (not included)

Bun Feet

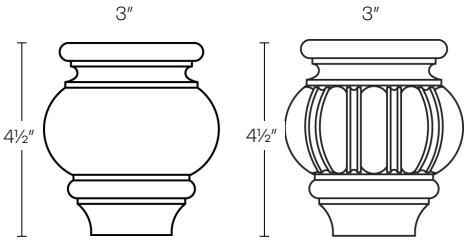

Plain Fluted

BUN-P	111	111	111	N/A	134	1341	1341	N/A
BUN-F	116	116	116	N/A	140	40	40	N/A

Corbel

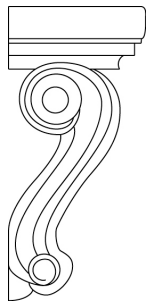

CBO

CBM

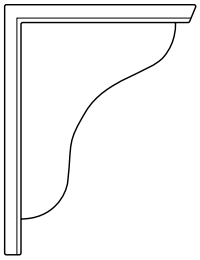

CBS

Item Number	A	B	C	Plus Program D	M	N	O	P
CBO6	382	382	382	N/A	459	459	459	N/A
CBO9	430	430	430	N/A	516	516	516	N/A
CBO13	512	512	512	N/A	615	615	615	N/A
CBM6	382	382	382	N/A	459	459	459	N/A
CBM9	430	430	430	N/A	516	516	516	N/A
CBM13	512	512	512	N/A	615	615	615	N/A
CBS6	100	100	100	126	120	120	120	126
CBS10	139	139	139	176	167	167	167	176

	W	D	H
CBO6	3″	3⅝″	6″
CBO9	4¾″	3⅝″	9″
CBO13	4¾″	6″	13″
CBM6	3″	3½″	6″
CBM9	4½″	4½″	9″
CBM13	4½″	6″	13″
CBS6	3″	3½″	6½″
CBS10	3″	7½″	10½″

Decorative End

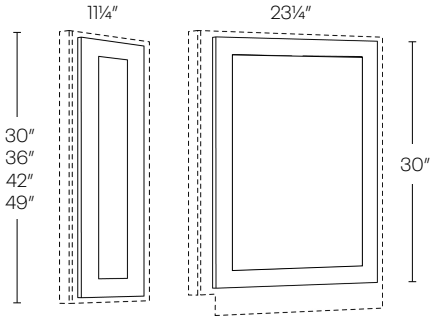

WDE12 BDE24

WDE1230	175	185	197	249	237	237	237	249
WDE1236	249	264	279	352	335	335	335	352
WDE1242	292	310	329	415	395	395	395	415
WDE1250	361	383	405	511	486	486	486	511
BDE24	420	446	471	595	566	566	566	595

• Use finished skin to flush with frame

Item Number	A	B	C	Plus Program D	M	N	O	P
Custom Decorative Panel*	-	-	-					

Refrigerator Door

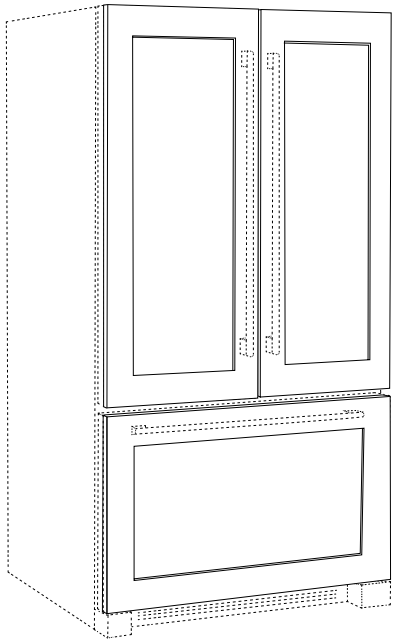

• Customer must provide drawings and dimensions for custom price quote and lead time
• Can not be combined with existing quote
• Custom Decorative Panels will have an extended lead time

* Doors are made custom, please provide accurate drawings with your order

Touch Up Kit

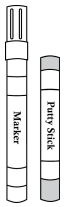

TUP

TUP-PINT

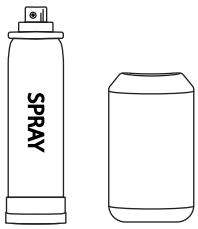

CHW-UNI-AERSOL-SPRAY

TUP	100	100	100	120	120	120	120	120
TUP-PINT	118	118	118	123	123	123	123	123
CHW-UNI-AERSOL-SPRAY	100	100	100	100	100	100	100	100

• TUP-PINT is not available in the Stone finish
*Must purchase TUP-PINT with Aerosol Spray

Modifications & Upgrades

Concord Collection

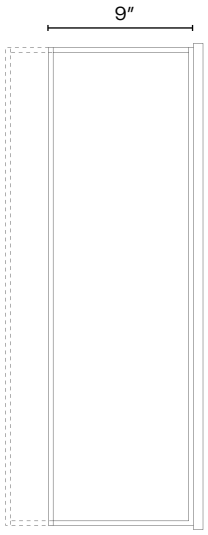

Wall Cabinet

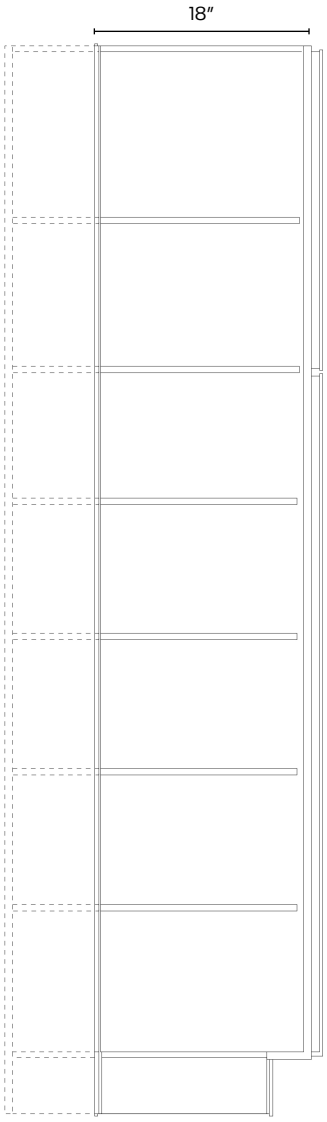

Tall Cabinet

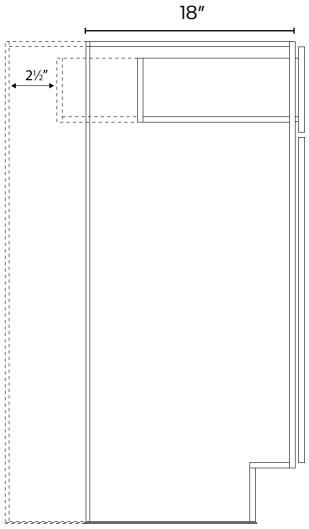

Base Cabinet

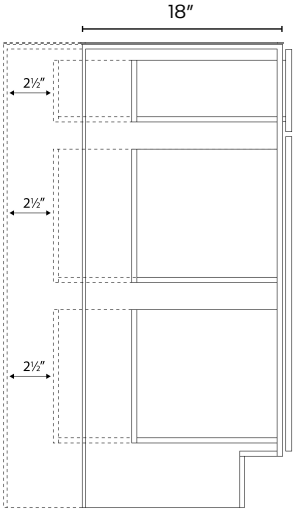

Drawer Base Cabinet

*Dovetail not in back

Cut Down Depth	Description	List Price
CT-BCUT *	Base cabinet, cut down depth	400
CT-DBCUT*	Drawer base cabinet, cut down depth	500
CT-TCUT*	Tall cabinet, cut down depth	500
CT-WCUT**	Wall cabinet, cut down depth	400

*Can be cut down to 9″, 12″, 15″, 18″ & 21″ | **Can be cut down to 6″, 9″ & 11″
*All 9″ Base Cabinets will have a dummy drawer front

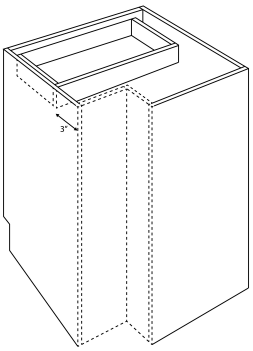

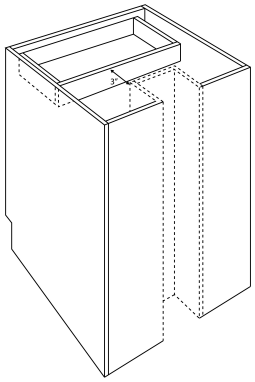

Base Cabinet

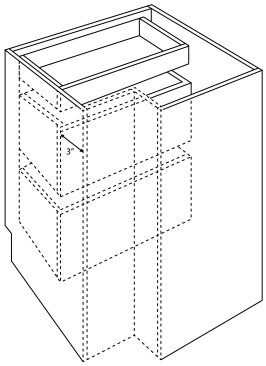

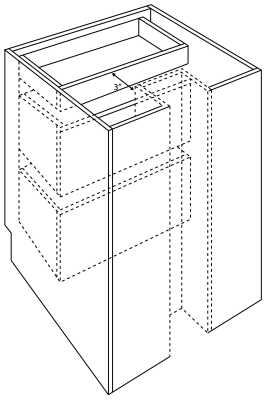

Drawer Base Cabinet

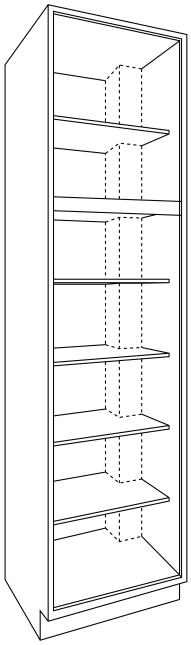

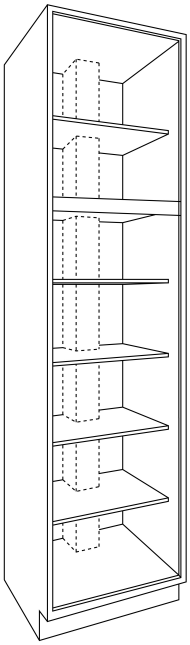

Tall Cabinet

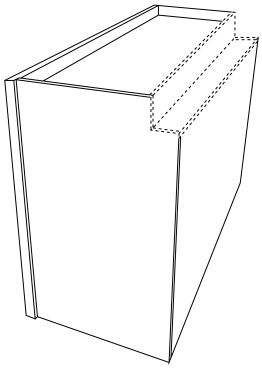

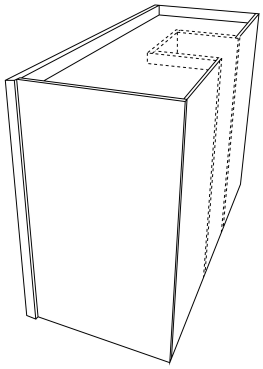

Wall Cabinet

Chase Cuts	Description	List Price
CT-BCHASE	Base cabinet, chase cut	700
CT-DBCHASE	Drawer base cabinet, chase cut	900
CT-TCHASE	Tall cabinet, chase cut	900
CT-WCHASE	Wall cabinet, chase cut	600

•Non-stock cabinets, parts including doors and drawets, custom modifications, wood hoods and countertops (post form and self-edge) are not returnable.
•Must provide accurate drawings with your order
•Only available in NorthEast

Item	Description	List Price

Door cut for glass

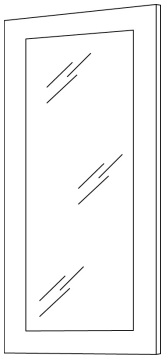

CT-DCG	Door cut for glass	205
CT-DCG-GLI	Door cut and insert glass	381
CT-GLI	Glass Insert	197

•Only Wall Cabinets can be cut for glass
•Loose glass not for sale
*Per door cost shown above

Toe Kick

CT-HANDICUT	Base cabinet, cut off toe kick	116
CT-HANDICUTSHIP	Base cabinet, cut off toe kick and ship	200

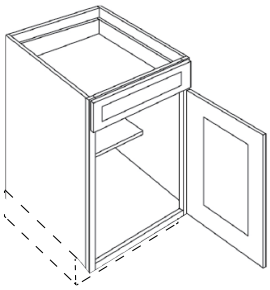

CT-HANDICUT

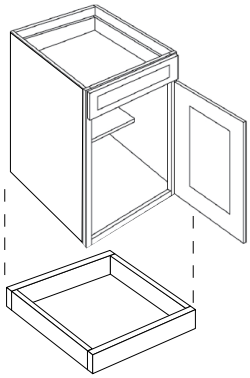

CT-HANDICUTSHIP

Wall

CT-EXDW	Extended depth wall	806

• Can only be extended to 15", 18", 21" & 24"

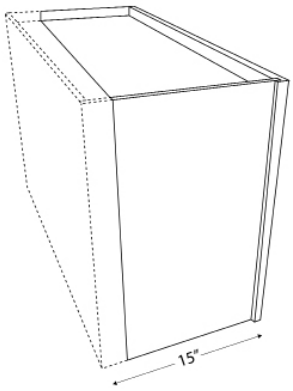

	Item	Description	List Price
Concord Full Depth Shelf	**CT-SHELF-FD-B9**	Full Depth Shelf	7
	CT-SHELF-FD-B12	Full Depth Shelf	9
	CT-SHELF-FD-B15	Full Depth Shelf	11
	CT-SHELF-FD-B18	Full Depth Shelf	14
	CT-SHELF-FD-B21	Full Depth Shelf	15
	CT-SHELF-FD-B24	Full Depth Shelf	17
	CT-SHELF-FD-B27	Full Depth Shelf	20
	CT-SHELF-FD-B30	Full Depth Shelf	23
	CT-SHELF-FD-B33	Full Depth Shelf	27
	CT-SHELF-FD-B36	Full Depth Shelf	30
	CT-SHELF-FD-B39	Full Depth Shelf	34
	CT-SHELF-FD-B42	Full Depth Shelf	37
	CT-SHELF-FD-B48	Full Depth Shelf	40

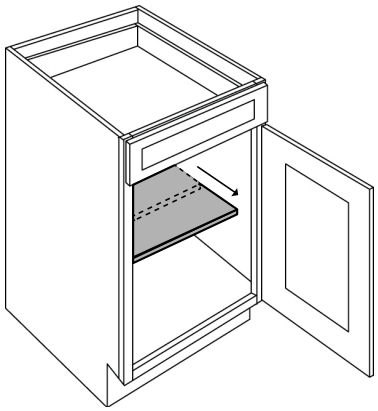

Finished Interior	**CT-FINISH-B**	Finished Interior - Base Cabinet	450
	CT-FINISH-W	Finished Interior - Wall Cabinet	450
	CT-FINISH-T	Finished Interior - Tall Cabinet	800

• Drawers will not be finished

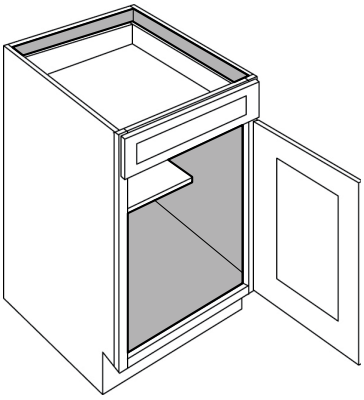

Recessed Toe Kick	**CT-TK-REDUCE**	Recessed Toe Kick	800

• Must specify front, left, right dimensions

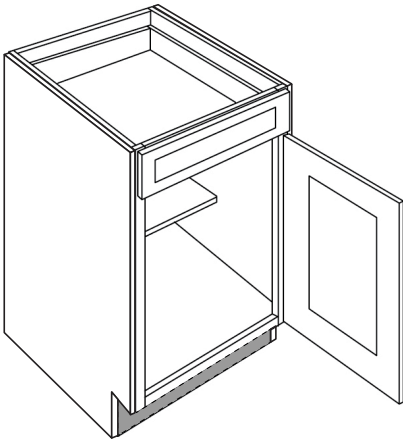

Front View - Toe Kick

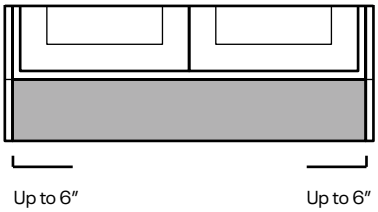

Item	Description	List Price

Flush Toe Kick

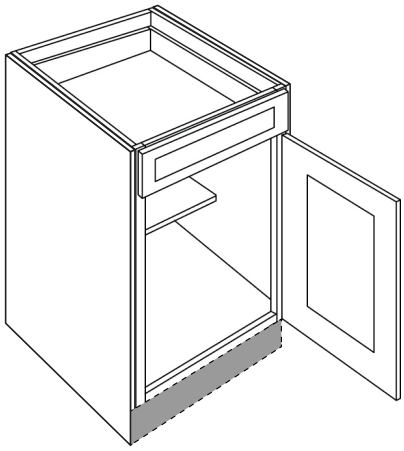

CT-TKFLUSH	Flush Toe Kick	100

Front View - Toe Kick

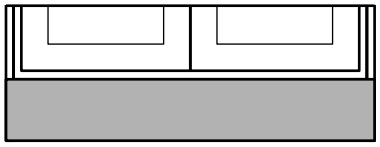

Base Cabinet to Sink Base

CHARGE-SINK BASE	Base to Sink Base	210

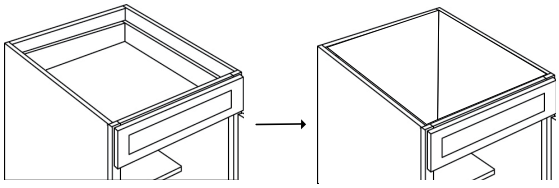

Reduced Top Drawer

CT-TD-REDUCE	Reduce Depth of Top Drawer	120

• Can be cut down to 9″, 12″, 15″, 18″ & 21″

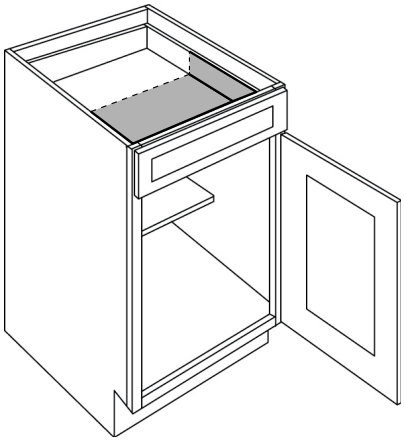

Cabinet & Door Information

Classic Collection

White Finish Frameless Box

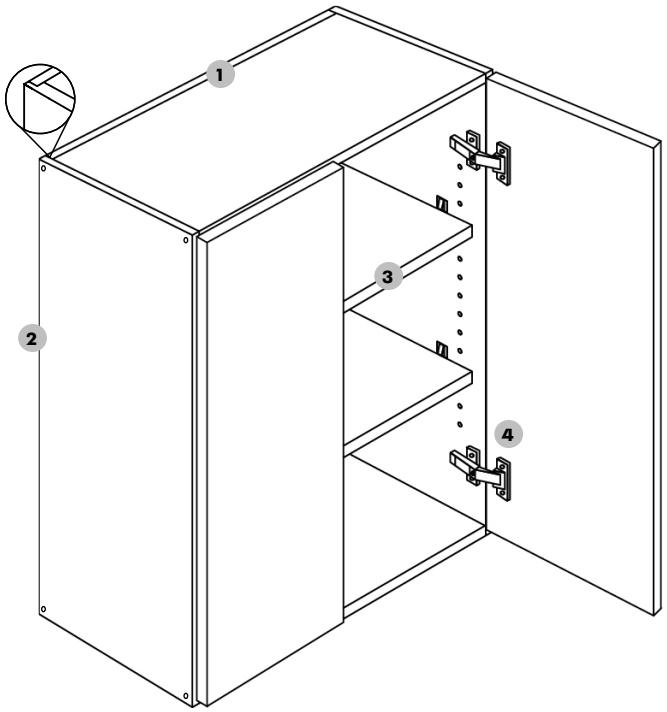

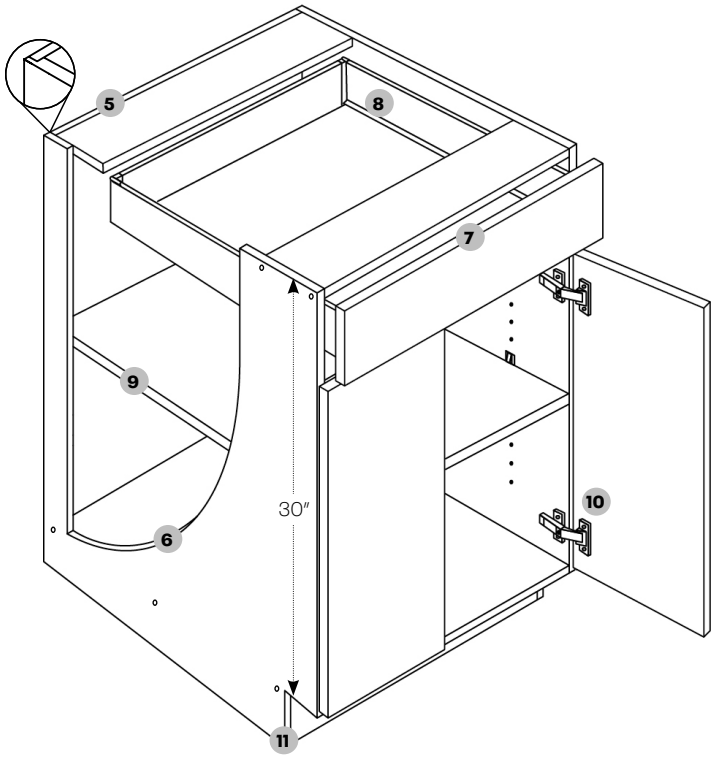

1. **Back panel** — ¾″ back panel
2. **End panel** — 3/4″ thick plywood sides, constructed with glue, screws, and wooden dowels for durability and strength.
3. **Shelves** — ¾″ thick, plywood; fully adjustable with metal clips.
4. **Hinges** — Heavy duty steel concealed 6 way adjustable clip-on hinges with soft-close mechanism
   *36″ and 42″ Wall cabinets will have 3 hinges
5. **Back panel** — ¾″ full back panel constructed with wood dowels, glued and screwed together.
6. **End panel** — 3/4″ thick plywood sides, constructed with glue, screws, and wooden dowels for durability and strength.
7. **Drawers** — Double white wall metal drawer with ½″ plywood bottom.
8. **Glides** — Full extension glides, with soft closing feature.
9. **Shelves** — ¾″ thick, full depth plywood; fully adjustable with metal clips.
10. **Hinges** — Heavy duty steel concealed hinge, adjustable with soft-close mechanism
11. **Toe Kick** — 4½″ Toe kick with 3″ inset on all standard base and vanity cabinets. White toe kick is standard.

Cabinet boxes are white edge banded with white interior and exterior.

On diagonal corner cabinets, matching edge banding will be applied vertically.

Classic cabinets are only available assembled.

Maple Finish Frameless Box

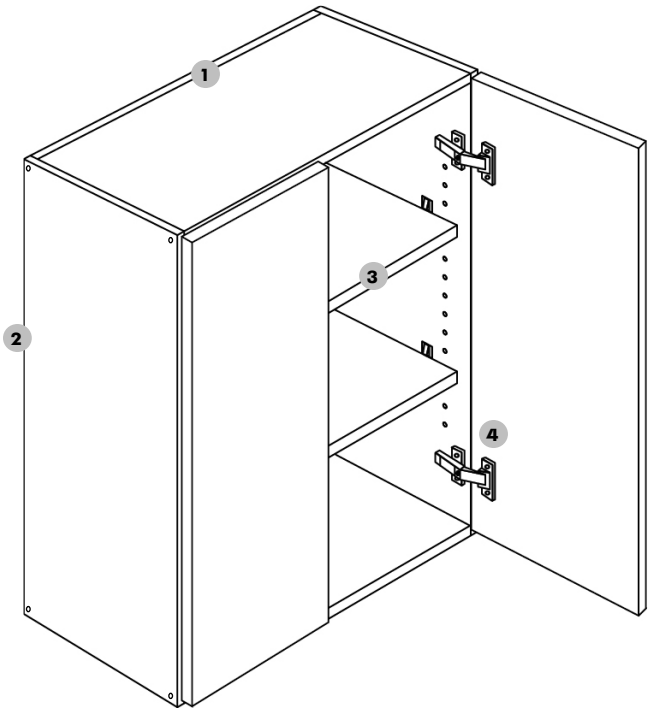

1. **Back panel** — ¾″ back panel
2. **End panel** — 3/4″ thick plywood sides, constructed with glue, screws, and wooden dowels for durability and strength.
3. **Shelves** — ¾″ thick, plywood; fully adjustable with metal clips.
4. **Hinges** — Heavy duty steel concealed 6 way adjustable hinge with soft-close mechanism

   *36″ and 42″ Wall cabinets will have 3 hinges

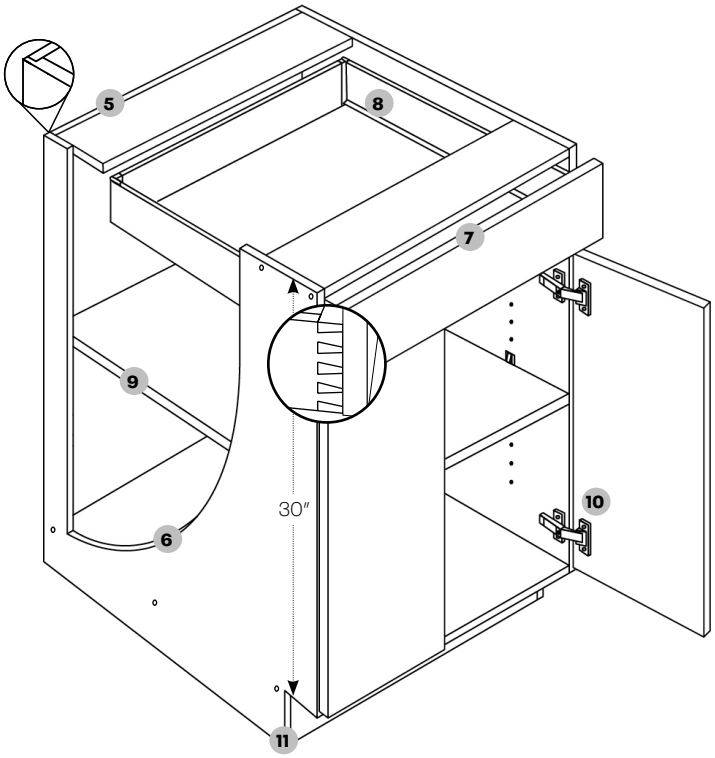

5. **Back panel** — ¾″ full back panel constructed with wood dowels, glued and screwed together.
6. **End panel** — 3/4″ thick plywood sides, constructed with glue, screws, and wooden dowels for durability and strength.
7. **Drawers** — ¾″ Solid wood, dovetail construction with soft-close glides.
8. **Glides** — Full extension glides, with soft closing feature.
9. **Shelves** — ¾″ thick, full depth plywood; fully adjustable with metal clips.
10. **Hinges** — Heavy duty steel concealed hinge, adjustable with soft-close mechanism
11. **Toe Kick** — 4½″ Toe kick with 3″ inset on all standard base and vanity cabinets. White toe kick is standard.

Cabinet boxes are maple edge banded with maple interior and exterior.

On diagonal corner cabinets, matching edge banding will be applied vertically.

Classic cabinets are only available assembled.

Frameless

1/8″ Reveal

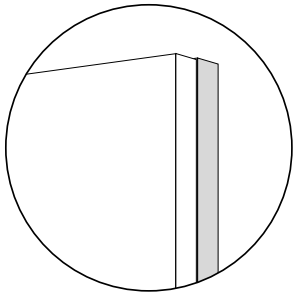

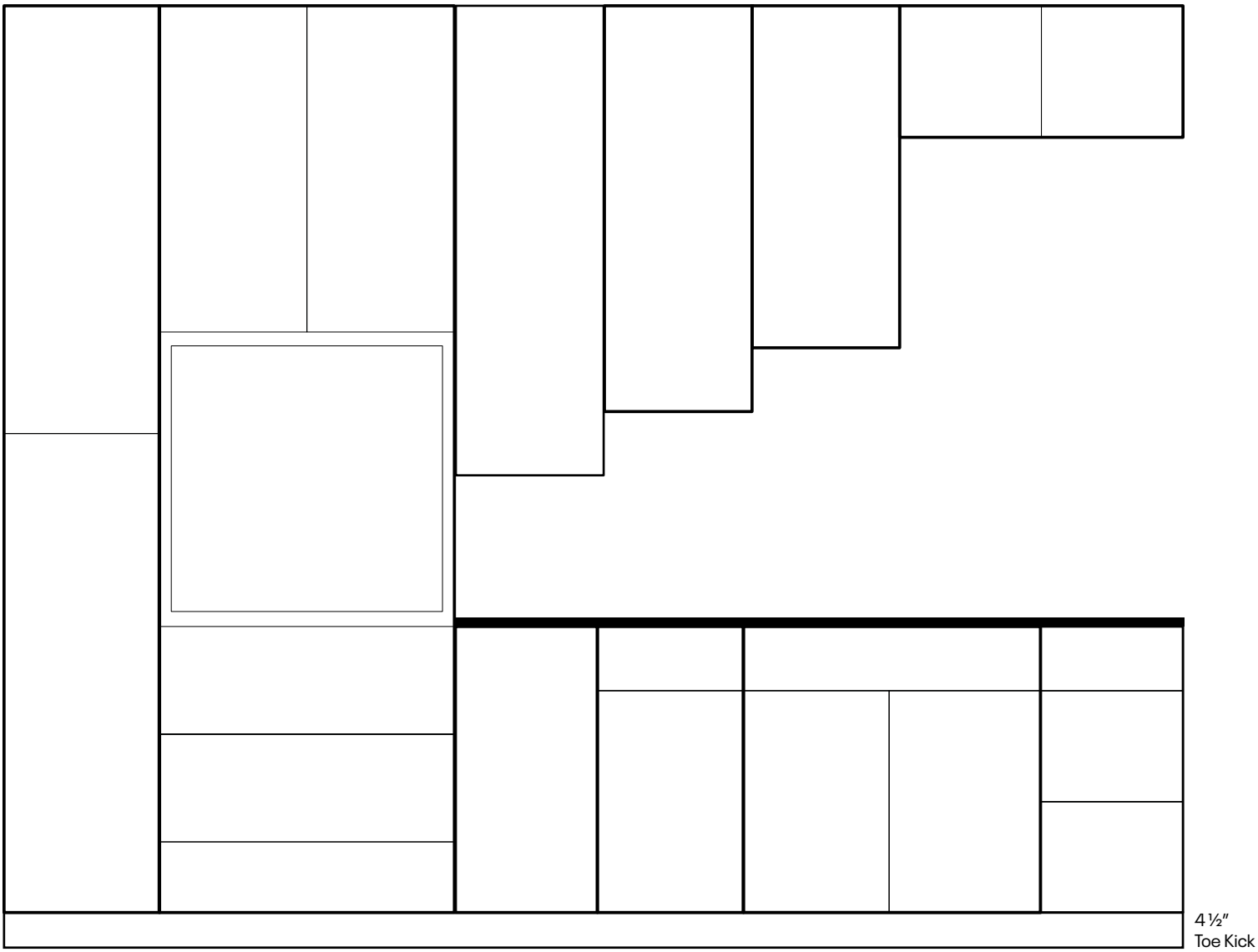

Broadway

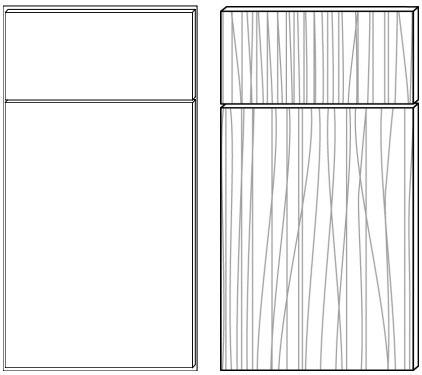

A full overlay low pressure laminate flat panel MDF door. with matching back

White Box	Maple Box	Finish	Price Code
BMW	BMM	600 - Cotton	E
BMW	BMM	601 - Silk	E
BMW	BMM	650 - Almond	E
BMW	BMM	651 - Chestnut	E
BMW	BMM	652 - Walnut	E
BMW	BMM	656 - Silver Birch	E
BMW	BMM	653 - Coastal	E
BMW	BMM	654 - Driftwood	E
BMW	BMM	655 - Beach	E
BMW	BMM	602 - Nimbus	E
BMW	BMM	603 - Cobalt	E
BMW	BMM	604 - Graphite	E

End Panel Options

- 3/4" field applied finished end (customer must order end panel)

Hardware

- 6 way, soft-close clip-on hinges and full extension glides

Milano

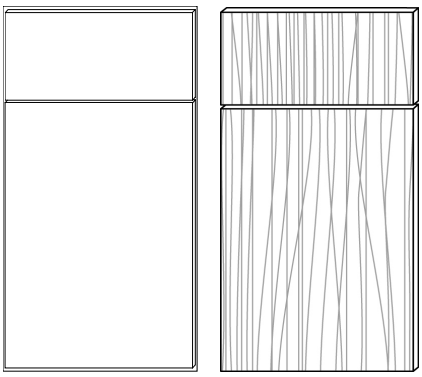

A full overlay slab door made from a MDF core, wrapped in PET with a matching edgeband and melamine back.

White Box	Maple Box	Finish	Price Code
MPW	MPM	400 - Polar White (gloss)	F
MPW	MPM	401 - Fossil Grey (gloss)	F
MPW	MPM	402 - Sand (matte)	F
MPW	MPM	403 - Seaside (matte)	F
MPW	MPM	404 - Pine (matte)	F
MPW	MPM	405 - Snow (matte)	F
MPW	MPM	406 - Sunset (matte)	F
MPW	MPM	407 - Obsidian (matte)	F
MPW	MPM	450 - Mirage (reeded)	F
MPW	MPM	451 - Dune (textured)	F
MPW	MPM	452 - Autumn (textured)	F
MPW	MPM	453 - Ash (textured)	F

End Panel Options

- 3/4" applied or integrated finished sides. (customer must order)

Hardware

- BLUM 6 way, soft-close clip-on hinges and full extension glides

Versailles

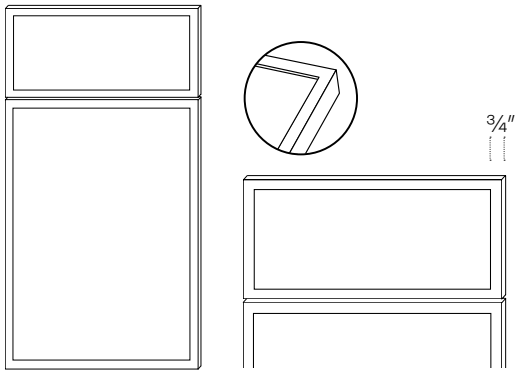

A full overlay 5 piece solid wood, with solid MDF veneer flat center panel. The Versailles door features a 3/4" frame.

- **3/4" Applied finished sides (Customer must order)**
- **6 way, soft-close clip-on hinges and full extension glides**

PLUS Program Upgrades

- **BLUM 6 way, soft-close clip-on hinges and full extension glides**

White Box	Maple Box	Finish	Price Code
VBW	VBM	10 - White	G

White Box	Maple Box	Finish	Price Code
Stain			
VKWP	VKMP	VBP200 - Ale	I
VKWP	VKMP	VBP201 - Bourbon	I
Paint			
VBWP	VBMP	101 - Sleek White	H
VBWP	VBMP	102 - Linen	H
VBWP	VBMP	103 - Sahara	H
VBWP	VBMP	104 - Mountain Stream	H
VBWP	VBMP	105 - Adirondack Blue	H
VBWP	VBMP	106 - Sage	H
VBWP	VBMP	107 - Evergreen	H
VBWP	VBMP	108 - Rumors	H
VBWP	VBMP	109- Cracked Pepper	H
VBWP	VBMP	110 - Jet Black	H

Highland

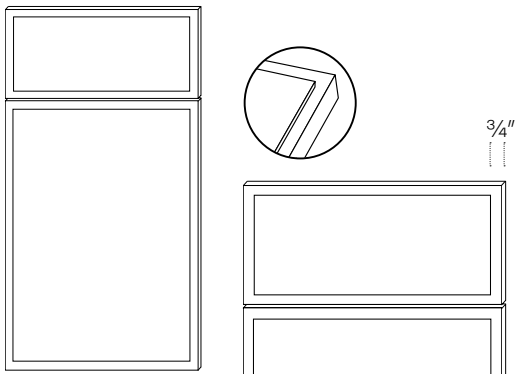

A full overlay 5 piece solid wood, with solid MDF veneer raised center panel. The Highland door features a 3/4" frame.

- **3/4" Applied finished sides (Customer must order)**
- **6 way, soft-close clip-on hinges and full extension glides**

PLUS Program Upgrades

- **BLUM 6 way, soft-close clip-on hinges and full extension glides**

White Box	Maple Box	Finish	Price Code
HBW	HBM	10 - White	G

White Box	Maple Box	Finish	Price Code
HBWP	HBMP	101 - Sleek White	H
HBWP	HBMP	102 - Linen	H
HBWP	HBMP	103 - Sahara	H
HBWP	HBMP	104 - Mountain Stream	H
HBWP	HBMP	105 - Adirondack Blue	H
HBWP	HBMP	106 - Sage	H
HBWP	HBMP	107 - Evergreen	H
HBWP	HBMP	108 - Rumors	H
HBWP	HBMP	109- Cracked Pepper	H
HBWP	HBMP	110 - Jet Black	H

Alvic Doors

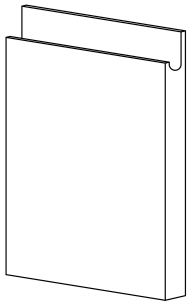

Finger-Pull

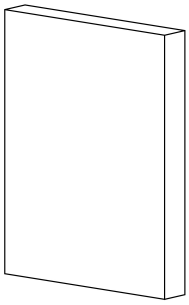

Slab

Finish	Price Code
Syncron (Textured)	J
Luxe (High Gloss) / Zenit (Matte)	K

Alvic doors come with a color matching soft postforming edge band.

Finger-Pull is 25% Up-charged

Panels cannot exceed 107″

*Alvic Doors come standard equipped with Blum hinges

- **Exposed ends need ¾″ finished panels (Not Factory Installed)**
- **Finger Pull only available on doors and drawers that are 47.5″ or less**

Specifications & Pricing

Classic Collection

	Item Number	E	F	G	Plus Program H	I	Alvic J	K
12″ High Wall Cabinet	**3012**	324	440	427	487	512	500	560
	3312	382	469	452	506	531	530	595
	3612	416	511	492	549	577	577	647
	3912	426	602	595	592	622	624	699

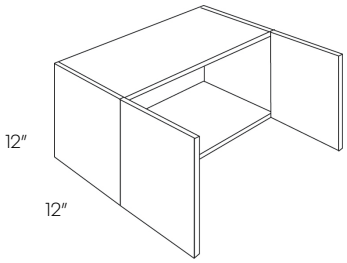

12″ High, 24″ Deep Wall Cabinet	**3012X24**	487	598	602	869	912	677	758
	3312X24	493	608	613	886	930	688	770
	3612X24	537	659	661	732	769	745	834
	3912X24	558	747	747	790	829	803	898

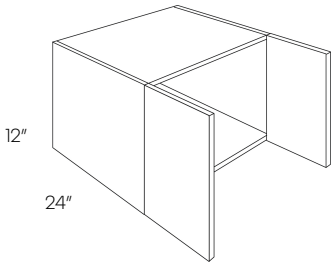

15″ High Wall Cabinet	**1215 (1 Door)**	248	320	289	396	416	368	439
	1515 (1 Door)	268	345	309	424	445	378	449
	1815 (1 Door)	288	372	336	457	480	388	459
	2115 (1 Door)	309	397	356	489	513	398	469
	2415	366	450	430	481	506	508	569
	3015	371	458	443	496	521	518	580
	3315	393	482	468	517	543	546	611
	3615	416	536	538	549	577	577	647

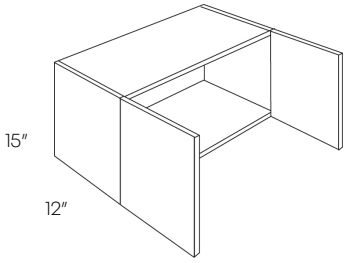

	Item Number	E	F	G	Plus Program H	I	Alvic J	K
15″ High, 24″ Deep Wall Cabinet	**3015X24**	505	620	637	666	699	702	786
	3315X24	514	634	670	968	1017	717	804
	3615X24	561	688	718	741	778	780	871
	3915X24	583	752	627	814	855	843	938

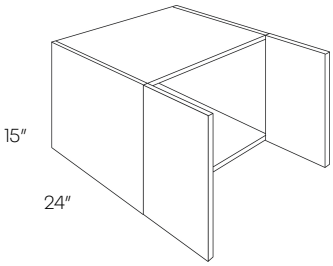

15″ High Diagonal Corner Wall Cabinet	**CW2415**	448	578	666	913	959	622	697

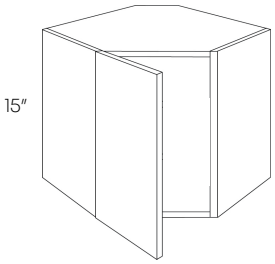

18″ High Wall Cabinet	**1218 (1 Door)**	266	330	330	453	475	378	423
	1518 (1 Door)	276	347	355	487	512	388	435
	1818 (1 Door)	294	363	382	523	549	403	452
	2118 (1 door)	312	378	407	457	480	479	538
	2418	340	462	451	481	506	524	647
	3018	416	511	473	503	528	577	587
	3318	458	562	488	545	572	635	646
	3618	503	617	557	624	655	698	711
	3918	550	679	658	699	734	761	776

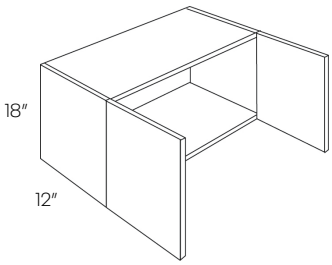

	Item Number	E	F	G	Plus Program H	I	Alvic J	K
18″ High, 24″ Deep Wall Cabinet	**3018X24**	525	644	674	741	778	729	816
	3318X24	536	658	727	817	858	744	833
	3618X24	569	775	772	834	876	877	983
	3918X24	680	876	860	834	876	1010	1133

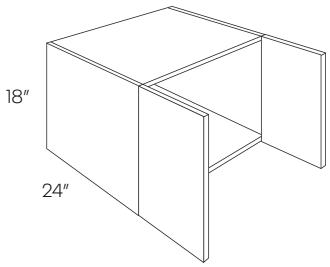

18″ High Diagonal Corner Wall Cabinet	**CW2418**	485	626	762	1044	1097	675	755

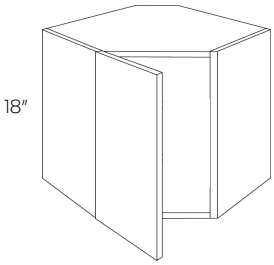

24″ High Wall Cabinet	**2424**	514	634	606	660	693	717	804
	2724	518	639	610	677	711	725	811
	3024	536	661	618	692	726	750	846
	3324	555	684	656	672	705	773	867
	3624	594	733	704	791	831	831	930
	3924	645	796	771	864	908	882	988
	4224	663	824	792	941	988	932	1045

• No center brace

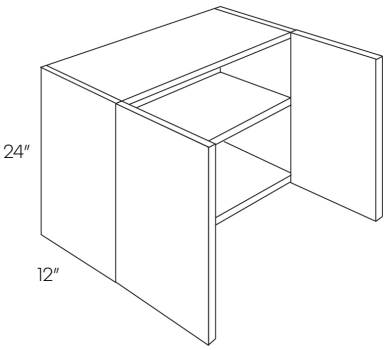

24″ High, 24″ Deep Wall Cabinet

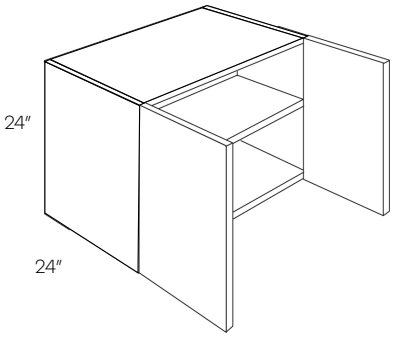

Item Number	E	F	G	Plus Program H	I	Alvic J	K
3024X24	703	863	828	924	970	975	1092
3324X24	747	921	888	996	1045	1045	1169
3624X24	804	992	952	1068	1121	1124	1258
3924X24	839	1078	1070	1196	1255	1203	1347

• No center brace

Horizontal Wall Cabinet

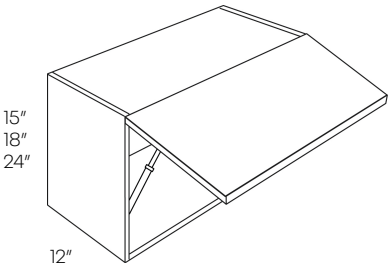

3012-HD	624	672	722	775	814	840	940
3015-HD	671	750	702	784	823	849	951
3018-HD	716	755	708	791	831	854	958
3024-HD*	836	868	875	980	1029	983	1101
3612-HD	716	746	791	837	879	1025	1143
3615-HD	716	976	795	837	879	1067	1185
3618-HD	803	617	816	912	958	1076	1203
***3624-HD**	894	1025	1014	1079	1133	983	1101

* Has shelf

30″ High 1 Door Wall Cabinet

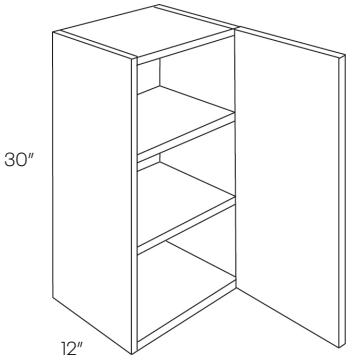

930	269	366	351	392	412	414	464
1230	332	408	392	437	459	462	517
1530	356	436	422	471	495	494	554
1830	401	493	474	530	557	557	624
2130	432	587	566	634	666	665	745

30″ High 2 Door Wall Cabinet

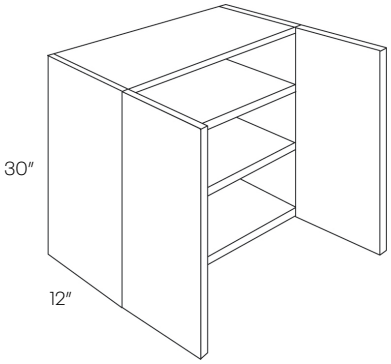

Item Number	E	F	G	Plus Program H	Plus Program I	Alvic J	Alvic K
2430	514	630	602	676	710	712	797
2730	564	692	666	744	781	785	878
3030	572	706	681	762	800	801	897
3330	631	774	742	828	870	876	980
3630	666	821	789	882	926	929	1039
3930	721	889	852	951	998	1004	1127
4230	762	940	919	1011	1062	1064	1193

30″ High Blind Wall Cabinet

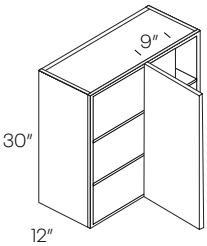

BLW27/BLW36

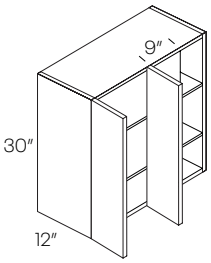

BLW42

BLW27/3030 (1 door)	729	894	858	961	1009	1013	1134
BLW30/3330 (1 door)	801	982	995	1055	1107	1212	1355
BLW36/3930	872	1069	1029	1148	1206	1212	1355
BLW42/4530	1048	1285	1233	1377	1446	1455	1628

• Can be installed at actual size

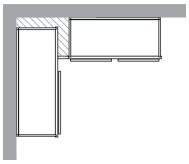

Cabinet	Min. Pull	Max. Pull	Actual Size	Door	Door Opening
BLW27/3030	27″	30″	27″	1230	11.25″ X 28.5″
BLW30/3330	30″	33″	36″	1530	14.25″ X 28.5″
BLW36/3930	36″	39″	36″	2130	20.25″ X 28.5″
BLW42/4530	42″	45″	42″	2730	26.25″ X 28.5″

30″ High Diagonal Corner Wall Cabinet

CW2430	747	816	878	984	1033	1037	1161

• Requires 24″ x 24″ wall space
• Matching Edgeband on vertical side

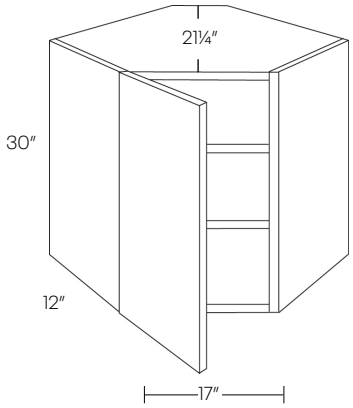

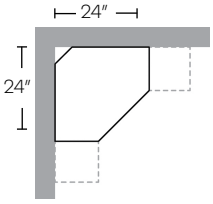

	Item Number	E	F	G	Plus Program H	I	Alvic J	K
30″ High Square Corner Wall Cabinet	**WSQ2430**	799	986	944	1132	1248	1118	1252

- Requires 24″ x 24″ wall space
- Pie is 12″ x 12″

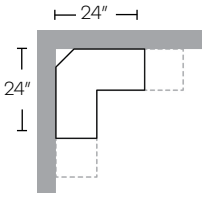

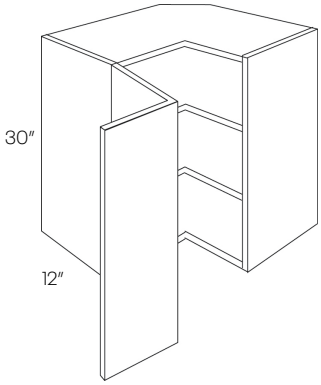

36″ High 1 Door Wall Cabinet	**936**	321	436	422	447	469	494	554
	1236	393	482	465	496	521	546	611
	1536	476	584	506	535	561	661	741
	1836	528	648	562	602	633	737	806
	2136	574	704	676	719	755	797	893

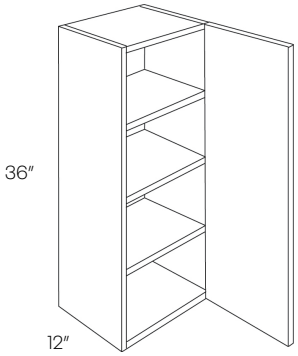

36″ High 2 Door Wall Cabinet	**2436**	613	752	720	771	809	851	952
	2736	673	831	795	844	887	941	1053
	3036	695	852	830	870	914	966	1082
	3336	677	921	888	947	994	1045	1169
	3636	719	979	939	1006	1056	1107	1241
	4236	826	1050	1162	1148	1206	1169	1313

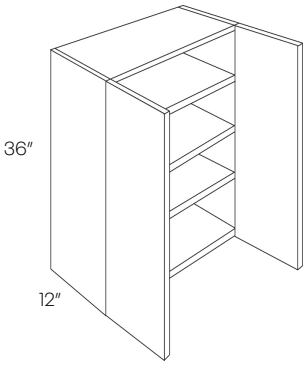

	Item Number	E	F	G	Plus Program H	Plus Program I	Alvic J	Alvic K
36″ High Blind Wall Cabinet	**BLW27/3036 (1 door)**	847	1039	999	1093	1148	1178	1317
	BLW30/3336 (1 door)	929	1196	1151	1203	1263	1291	1445
	BLW36/3936	1012	1241	1185	1312	1378	1404	1572
	BLW42/4536	1095	1409	1379	1422	1493	1517	1700

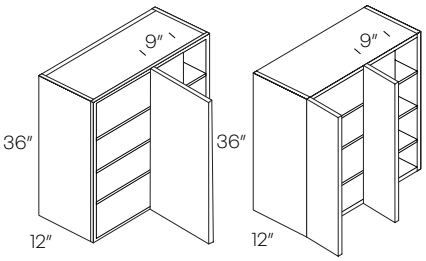

BLW27/BLW36 BLW42

• Can be installed at actual size

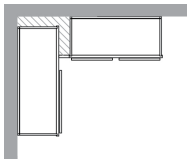

Cabinet	Min. Pull	Max. Pull	Actual Size	Door	Door Opening
BLW27/3036	27″	30″	27″	1236	11.25″ X 34.5″
BLW30/3336	30″	33″	30″	1536	14.25″ X 34.5″
BLW36/3936	36″	39″	36″	2136	20.25″ X 34.5″
BLW42/4536	42″	45″	42″	2736	26.25″ X 34.5″

36″ High Diagonal Corner Wall Cabinet	**CW2436**	708	868	925	1124	1180	1091	1221

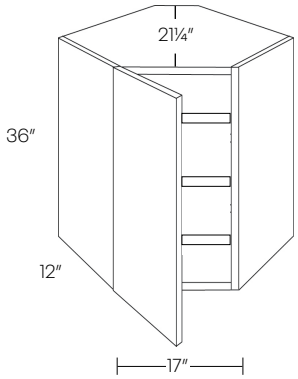

• Requires 24″ x 24″ wall space
•Matching Edgeband on vertical side

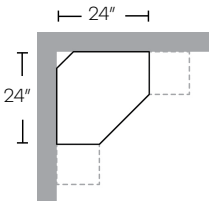

36″ High Square Corner Wall Cabinet	**WSQ2436**	842	1039	993	1191	1313	1178	1317

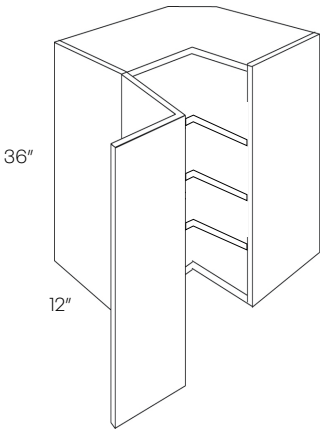

• Requires 24″ x 24″ wall space

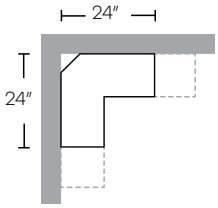

42″ High 1 Door Wall Cabinet

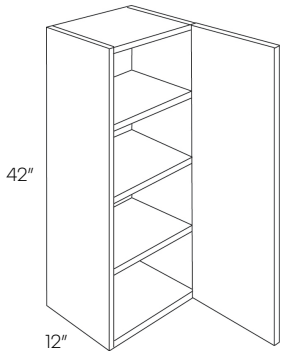

Item Number	E	F	G	H (Plus Program)	I	J (Alvic)	K
942	358	488	469	528	554	552	619
1242	394	536	513	571	599	605	678
1542	430	585	563	631	663	662	742
1842	532	653	625	702	737	738	826
2142	638	783	750	836	877	888	993

42″ High 2 Door Wall Cabinet

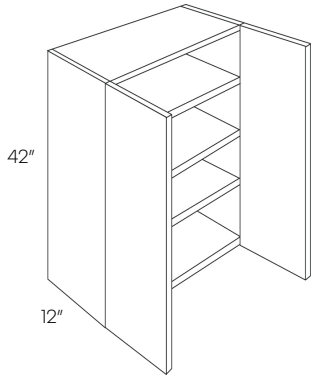

2442	682	836	805	896	941	948	1060
2742	744	918	884	987	1036	1039	1165
3042	778	954	915	1023	1074	1080	1208
3342	836	1025	984	1099	1154	1161	1300
3642	879	733	1043	1167	1225	1229	1376
4242	973	1193	1277	1354	1422	1297	1452

42″ High Blind Wall Cabinet

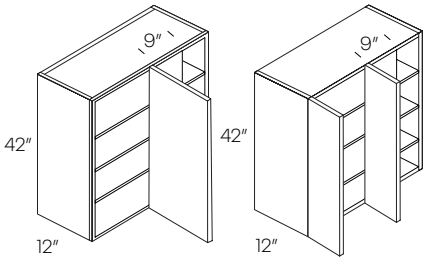

BLW27/BLW36 BLW42

BLW27/3042 (1 door)	942	1155	1112	1240	1302	1309	1464
BLW30/3342(1 door)	1038	1272	1290	1366	1434	1441	1613
BLW36/3942 (1 door)	1132	1388	1334	1491	1565	1572	1761
BLW42/4542	1427	1749	1525	1616	1697	1704	1910

• Can be installed at actual size

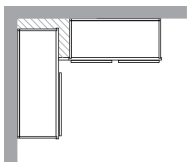

Cabinet	Min. Pull	Max. Pull	Actual Size	Door	Door Opening
BLW27/3042	27″	30″	27″	1242	11.25″ X 40.5″
BLW30/3330	30″	33″	30″	1542	14.25″ X 40.5″
BLW36/3942	36″	39″	36″	2142	20.25″ X 40.5″
BLW42/4536	42″	45″	42″	2736	26.25″ X 40.5″

	Item Number	E	F	G	Plus Program H	I	Alvic J	K
42″ High Diagonal Corner Wall Cabinet	**CW2442**	809	991	1145	1279	1343	1220	1289

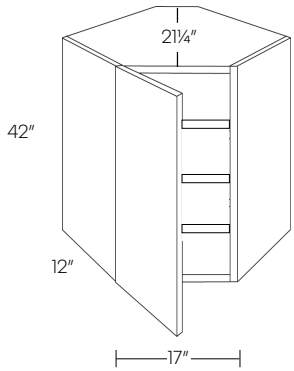

- Requires 24″ x 24″ wall space
- Matching Edgeband on vertical side

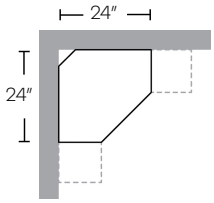

42″ High Square Corner Wall Cabinet	**WSQ2442**	1043	1287	1230	1478	1629	1458	1632

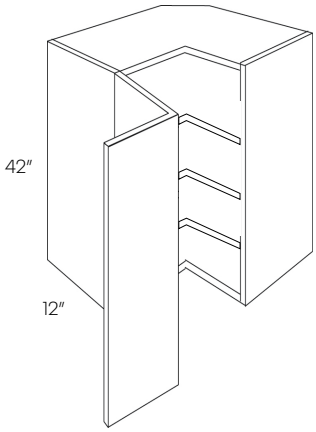

- Requires 24″ x 24″ wall space

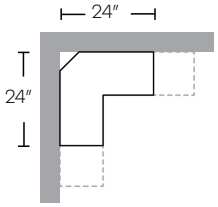

Single Door Wall End Cabinet	**WEC1230**	347	428	404	460	507	485	542
	WEC1236	391	482	452	523	577	546	611
	WEC1242	437	672	505	582	642	615	682

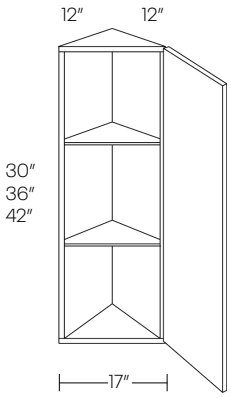

- 36″ and 42″ have 3 shelves
- Matching Edgeband

Double Door Wall End Cabinet

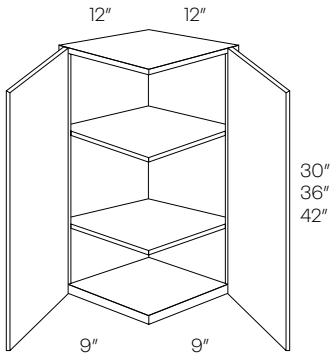

Item Number	E	F	G	Plus Program H	I	Alvic J	K
WECD1230	419	539	505	729	804	608	682
WECD1236	489	603	566	817	901	683	765
WECD1242	497	672	631	912	1005	762	853

• 36″ and 42″ have 3 shelves

Aluminum Frame Glass Door - Vertical

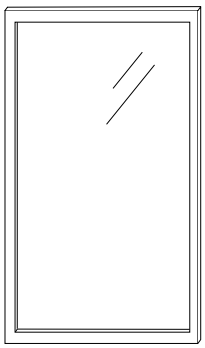

ACG-DR-1530	349	349	349	349	349	349	349
ACG-DR-1536	382	382	382	382	382	382	382
ACG-DR-1542	414	414	414	414	414	414	414
ACG-DR-1830	377	377	377	377	377	377	377
ACG-DR-1836	411	411	411	411	411	411	411
ACG-DR-1842	442	442	442	442	442	442	442

• Aluminum doors shipped loose
• Aluminum door frame is black

Aluminum Frame Glass Door - Horizontal

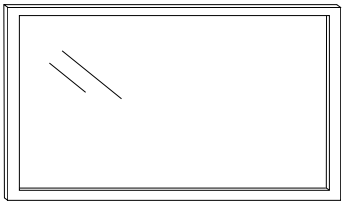

ACG-DR-3015-HD	349	349	349	349	349	349	349
ACG-DR-3018-HD	377	377	377	377	377	377	377
ACG-DR-3615-HD	382	382	382	382	382	382	382
ACG-DR-3618-HD	411	411	411	411	411	411	411

• Aluminum doors shipped loose
• Aluminum door frame is black

Aluminum Frame Glass Door - Vertical

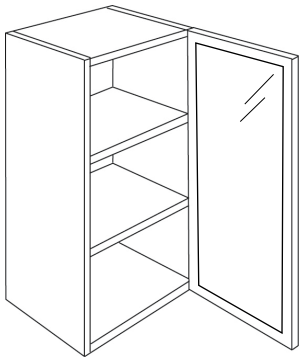

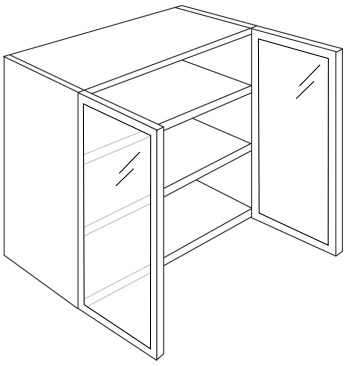

				Plus Program		Alvic	
Item Number	E	F	G	H	I	J	K
ACG-1530	705	785	625	715	750	683	743
ACG-1830	778	870	655	769	808	742	809
ACG-3030	1270	1404	1050	1250	1313	1179	1275
ACG-3630	1420	1575	1153	1364	1432	1301	1411
ACG-1536	858	966	747	875	918	851	931
ACG-1836	939	1059	799	931	977	918	987
ACG-3036	1459	1616	1193	1412	1482	1348	1464
ACG-3636	1615	1801	1296	1523	1599	1470	1604
ACG-1542	844	999	748	876	920	853	933
ACG-1842	974	1095	796	926	973	913	1081
ACG-3042	1606	1782	1290	1520	1596	1462	1590
ACG-3642	1763	1969	1383	1618	1698	1579	1726

• Aluminum door frame is black

Aluminum Frame Glass Door - Horizontal

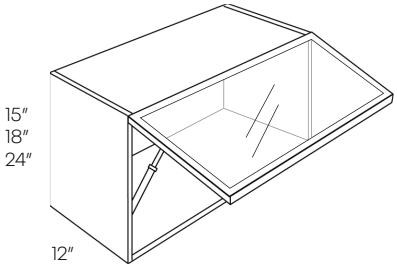

ACG-3015-HD	1020	1107	1063	1599	1679	1198	1300
ACG-3018-HD	1093	1188	1101	1600	1680	1236	1340
ACG-3615-HD	1098	1218	1261	1798	1887	1444	1562
ACG-3618-HD	1214	1328	1311	1799	1889	1487	1614

• Aluminum door frame is black

	Item Number	E	F	G	Plus Program H	I	Alvic J	K
Single Door Base Cabinet	**B9**	475	583	561	517	543	660	739
	B12	537	659	633	6 57	690	745	834
	B15	561	688	660	687	722	780	871
	B18	591	725	696	722	758	821	918
	B21	663	813	780	823	864	920	1032

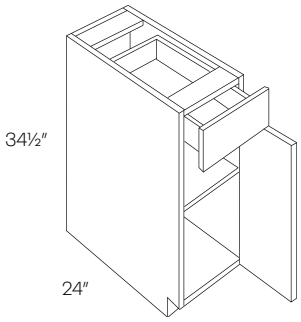

1 Drawer 2 Door Base Cabinet	**B24**	705	865	840	921	967	978	1095
	B27	771	945	919	1017	1068	1071	1199

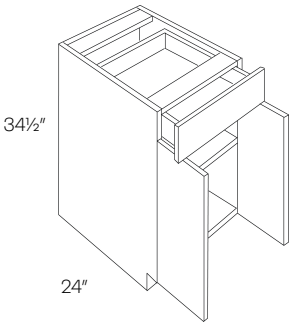

2 Drawer & Door Base Cabinet	**B30**	880	1079	1043	1108	1163	1223	1371
	B33	935	1146	1106	1183	1242	1299	1456
	B36	978	1200	1155	1240	1302	1359	1522
	B39	1031	1265	1220	1320	1385	1434	1606
	B42	1085	1330	1289	1390	1460	1506	1687

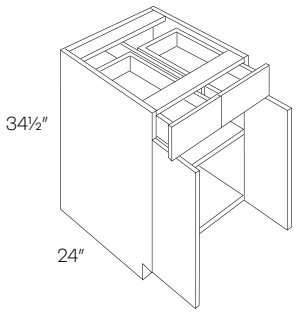

	Item Number	E	F	G	Plus Program H	I	Alvic J	K
Full Height Single Door Base Cabinet	**B9-FH**	475	583	561	517	543	660	739
	B12-FH	537	659	633	6 57	690	745	834
	B15-FH	561	688	660	687	722	780	871
	B18-FH	591	725	696	722	758	821	918
	B21-FH	663	813	780	823	864	920	1032

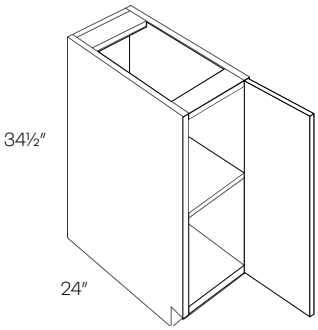

Full Height Door

Full Height 1 Drawer 2 Door Base Cabinet	**B24-FH**	705	865	840	921	967	978	1095
	B27-FH	771	945	919	1017	1068	1071	1199

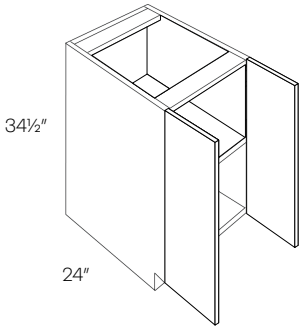

Full Height Door

Full Height 2 Drawer & Door Base Cabinet	**B30-FH**	880	1079	1043	1108	1163	1223	1371
	B33-FH	935	1146	1106	1183	1242	1299	1456
	B36-FH	978	1200	1155	1240	1302	1359	1522
	B39-FH	1031	1265	1220	1320	1385	1434	1606
	B42-FH	1085	1330	1289	1390	1460	1506	1687

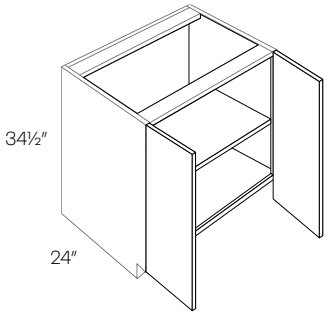

Full Height Door

Single Door Base Cabinet W/1 POS

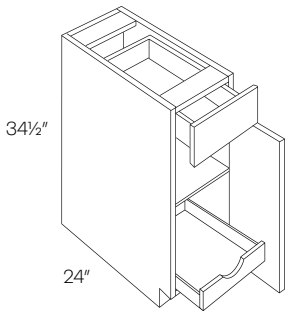

Item Number	E	F	G	H (Plus Program)	I (Plus Program)	J (Alvic)	K (Alvic)
B12-POS1	785	907	881	955	988	1110	1244
B15-POS1	818	945	917	994	1029	1153	1291
B18-POS1	869	1003	974	1050	1086	1223	1371
B21-POS1	953	1103	1070	1163	1204	1352	1515

- White Box has metal drawer
- Maple has a solid wood dovetail box, with ball bearing soft close glides (not BLUM)

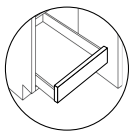

Slab drawer on
White Cabinet box POS

1 Drawer 2 Door Base Cabinet W/1 POS

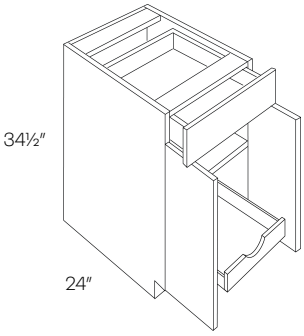

B24-POS1	1026	1186	1161	1292	1338	1432	1603
B27-POS1	1103	1277	1251	1399	1450	1539	1724

- White Box has metal drawer
- Maple has a solid wood dovetail box, with ball bearing soft close glides (not BLUM)

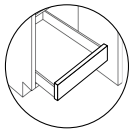

Slab drawer on
White Cabinet box POS

2 Drawer & Door Base Cabinet W/1 POS

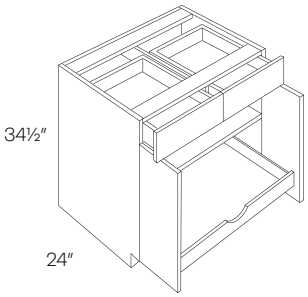

B30-POS1	1224	1423	1387	1502	1557	1706	1910
B33-POS1	1292	1503	1463	1590	1649	1798	2014
B36-POS1	1357	1579	1534	1669	1731	1884	2110
B42-POS1	1480	1725	1684	1819	1889	1838	2225

- White Box has metal drawer
- Maple has a solid wood dovetail box, with ball bearing soft close glides (not BLUM)

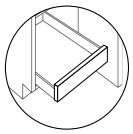

Slab drawer on
White Cabinet box POS

Full Height Single Door Base Cabinet W/1 POS

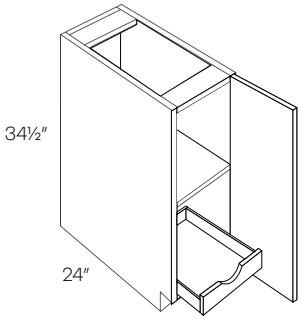

Full Height Door

Item Number	E	F	G	H (Plus Program)	I (Plus Program)	J (Alvic)	K (Alvic)
B12-POS1-FH	785	907	881	955	988	1110	1244
B15-POS1-FH	818	945	917	994	1029	1153	1291
B18-POS1-FH	869	1003	974	1050	1086	1223	1371
B21-POS1-FH	953	1103	1070	1163	1204	1352	1515

- White Box has metal drawer
- Maple has a solid wood dovetail box, with ball bearing soft close glides (not BLUM)

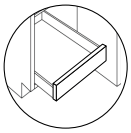

Slab drawer on
White Cabinet box POS

Full Height 1 Drawer 2 Door Base Cabinet W/1 POS

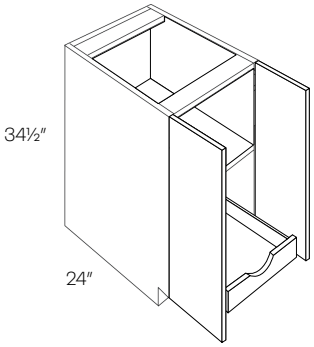

Full Height Door

B24-POS1-FH	1026	1186	1161	1292	1338	1432	1603
B27-POS1-FH	1103	1277	1251	1399	1450	1539	1724

- White Box has metal drawer
- Maple has a solid wood dovetail box, with ball bearing soft close glides (not BLUM)

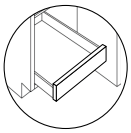

Slab drawer on
White Cabinet box POS

Full Height 2 Drawer & Door Base Cabinet W/1 POS

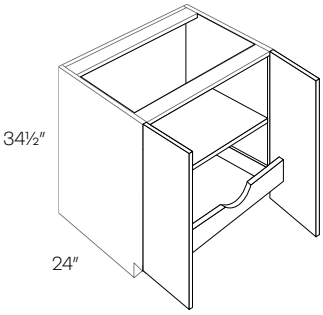

Full Height Door

B30-POS1-FH	1224	1423	1387	1502	1557	1706	1910
B33-POS1-FH	1292	1503	1463	1590	1649	1798	2014
B36-POS1-FH	1357	1579	1534	1669	1731	1884	2110
B42-POS1-FH	1480	1725	1684	1819	1889	1838	2225

- White Box has metal drawer
- Maple has a solid wood dovetail box, with ball bearing soft close glides (not BLUM)

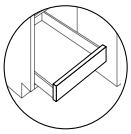

Slab drawer on
White Cabinet box POS

Single Door Base Cabinet W/2 POS

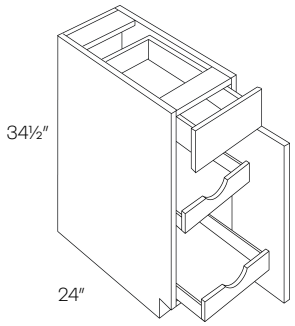

Item Number	E	F	G	H (Plus Program)	I (Plus Program)	J (Alvic)	K (Alvic)
B12-POS2	1033	1155	1129	1253	1286	1350	1510
B15-POS2	1075	1202	1174	1301	1336	1401	1569
B18-POS2	1147	1281	1252	1378	1414	1501	1680
B21-POS2	1243	1393	1360	1503	1544	1645	1842

- White Box has metal drawer
- Maple has a solid wood dovetail box, with ball bearing soft close glides (not BLUM)

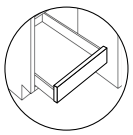

Slab drawer on
White Cabinet box POS

1 Drawer 2 Door Base Cabinet W/2 POS

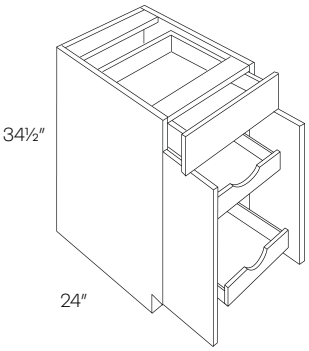

B24-POS2	1347	1507	1482	1663	1709	1760	1971
B27-POS2	1435	1609	1583	1781	1832	1881	2106

- White Box has metal drawer
- Maple has a solid wood dovetail box, with ball bearing soft close glides (not BLUM)

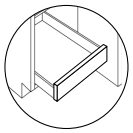

Slab drawer on
White Cabinet box POS

2 Drawer & Door Base Cabinet W/2 POS

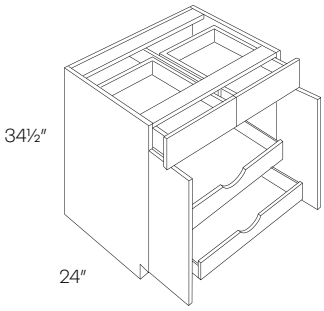

B30-POS2	1568	1767	1731	1896	1951	2066	2314
B33-POS2	1649	1860	1820	1997	2056	2173	2432
B36-POS2	1736	1958	1913	2098	2160	2283	2557
B42-POS2	1875	2120	2079	2248	2318	2916	2698

- White Box has metal drawer
- Maple has a solid wood dovetail box, with ball bearing soft close glides (not BLUM)

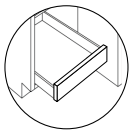

Slab drawer on
White Cabinet box POS

Full Height Single Door Base Cabinet W/2 POS

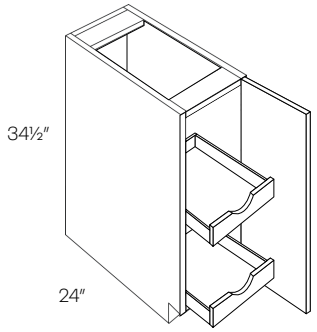

Full Height Door

Item Number	E	F	G	H (Plus Program)	I (Plus Program)	J (Alvic)	K (Alvic)
B12-POS2-FH	1033	1155	1129	1253	1286	1350	1510
B15-POS2-FH	1075	1202	1174	1301	1336	1401	1569
B18-POS2-FH	1147	1281	1252	1378	1414	1501	1680
B21-POS2-FH	1243	1393	1360	1503	1544	1645	1842

- White Box has metal drawer
- Maple has a solid wood dovetail box, with ball bearing soft close glides (not BLUM)

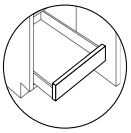

Slab drawer on
White Cabinet box POS

Full Height 1 Drawer 2 Door Base Cabinet W/2 POS

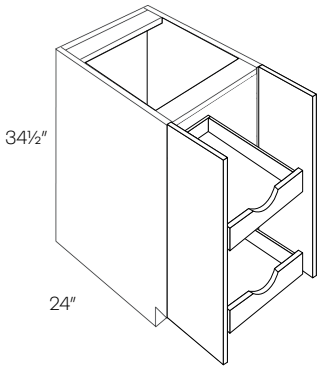

Full Height Door

B24-POS2-FH	1347	1507	1482	1663	1709	1760	1971
B27-POS2-FH	1435	1609	1583	1781	1832	1881	2106

- White Box has metal drawer
- Maple has a solid wood dovetail box, with ball bearing soft close glides (not BLUM)

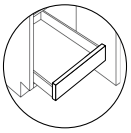

Slab drawer on
White Cabinet box POS

Full Height 2 Drawer & Door Base Cabinet W/2 POS

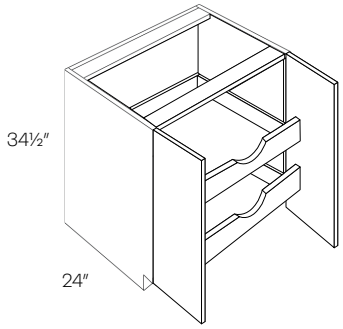

Full Height Door

B30-POS2-FH	1568	1767	1731	1896	1951	2066	2314
B33-POS2-FH	1649	1860	1820	1997	2056	2173	2432
B36-POS2-FH	1736	1958	1913	2098	2160	2283	2557
B42-POS2-FH	1875	2120	2079	2248	2318	2916	2698

- White Box has metal drawer
- Maple has a solid wood dovetail box, with ball bearing soft close glides (not BLUM)

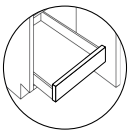

Slab drawer on
White Cabinet box POS

2 Drawer Base Cabinet

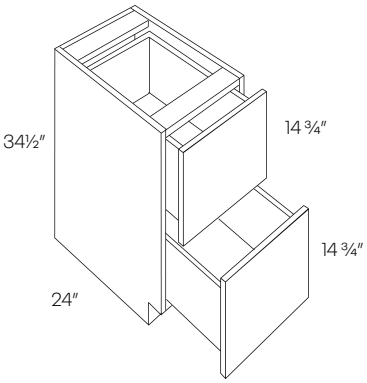

Item Number	E	F	G	Plus Program H	Plus Program I	Alvic J	Alvic K
DB24-2	969	1188	1142	1651	1733	1347	1507
DB30-2	1049	1287	1232	1780	1869	1458	1632
DB33-2	1100	1349	1292	1868	1962	1545	1729
DB36-2	1175	1440	1343	1943	2040	1632	1826

Blind Base Cabinet

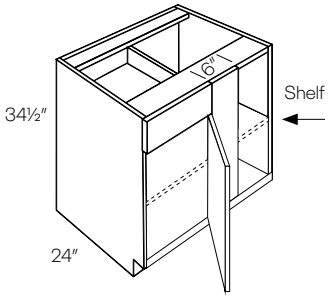

BLB36/39	931	1141	1095	1056	1109	1292	1447
BLB39/42	956	1172	1125	1105	1160	1328	1487
BLB42/45	1024	1255	1204	1294	1358	1423	1593
BLB45/48	1106	1356	1310	1384	1454	1537	1721

- Reversible Left or Right
- Must be pulled to the minimum position

Cabinet	Min. Pull	Max. Pull	Actual Size	Door	Door Opening
BLB36/39	36″	39″	27″	B9	8.25″
BLB39/42	39″	42″	33″	B12	11.25″
BLB42/45	42″	45″	36″	B15	14.25″
BLB45/48	45′	48″	42′	B18	17.25″

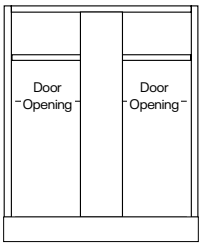

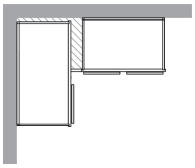

Full Height Blind Base Cabinet

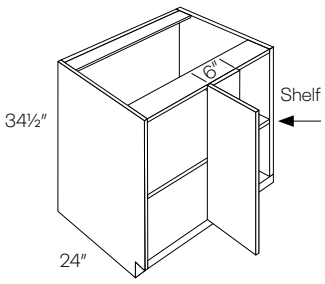

Full Height Door

BLB36/39-FH	931	1141	1095	1056	1109	1292	1447
BLB39/42-FH	956	1172	1125	1105	1160	1328	1487
BLB42/45-FH	1024	1255	1204	1294	1358	1423	1593
BLB45/48-FH	1106	1356	1310	1384	1454	1537	1721

- Reversible Left or Right
- Must be pulled to the minimum position

Cabinet	Min. Pull	Max. Pull	Actual Size	Door	Door Opening
BLB36/39	36″	39″	27″	B9	8.25″
BLB39/42	39″	42″	33″	B12	11.25″
BLB42/45	42″	45″	36″	B15	14.25″
BLB45/48	45′	48″	42′	B18	17.25″

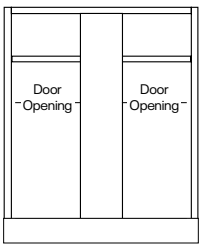

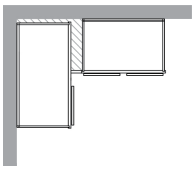

3-Drawer Base Cabinet

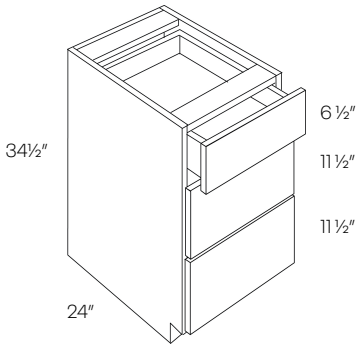

Item Number	E	F	G	H (Plus Program)	I (Plus Program)	J (Alvic)	K (Alvic)
DB12	849	1041	1003	1016	1066	1180	1321
DB15	888	1089	1043	1063	1116	1236	1383
DB18	907	1112	1071	1096	1151	1262	1412
DB21	937	1149	1105	1138	1195	1302	1459
DB24	969	1188	1142	1121	1177	1347	1507
DB27	1017	1247	1199	1209	1269	1412	1582
DB30	1049	1287	1232	1286	1351	1458	1632
DB33	1100	1349	1292	2519	2645	1528	1712
DB36	1175	1440	1343	1390	1460	1632	1826

Diagonal Corner Sink Base Cabinet

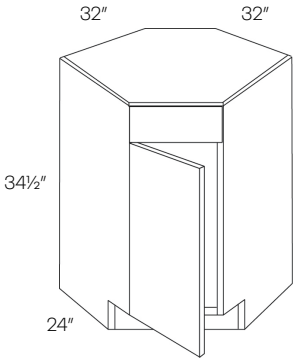

CSB36L	1355	1661	1547	1777	1866	1881	2106
CSB36R	1355	1661	1547	1777	1866	1881	2106

- Full height available for same price
- Requires 36″x36″ wall space
- Matching edgebanding will be applied on vertical edge frame

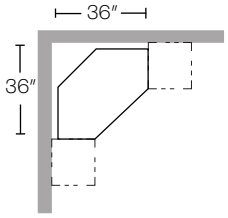

Diagonal Corner Sink Front

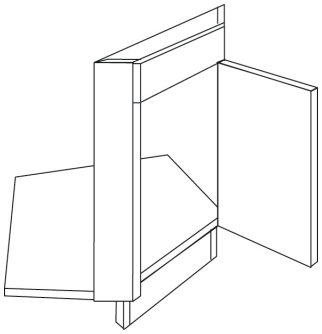

CSF36*	581	712	443	471	495	806	901
CSFFL36 (Floor)	187	207	187	221	232	187	187

*Requires 36″x36″ wall space
*Requires a floor (sold seperately)
- CSF36 ships together with CSFFL36
- For CSF36, matching edgeband will be applied on vertical edge frame

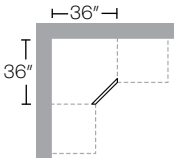

Easy Reach Corner Base Cabinet

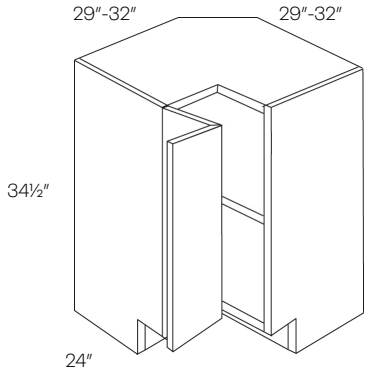

Item Number	E	F	G	H (Plus Program)	I (Plus Program)	J (Alvic)	K (Alvic)
ER36R	1616	2032	1898	1777	1866	2660	2979
ER36L	1616	2032	1898	1777	1866	2660	2979

- Available in left or right hinge
- Left hand shown

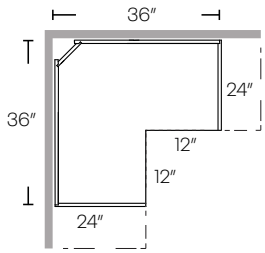

Easy Reach Corner Base Cabinet

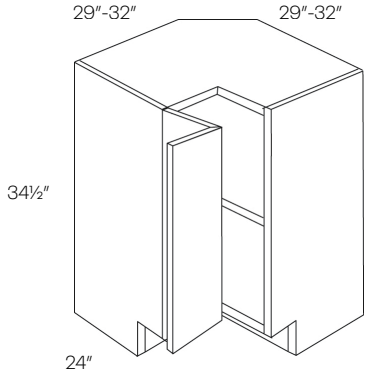

Item Number	E	F	G	H (Plus Program)	I (Plus Program)	J (Alvic)	K (Alvic)
BSQC33R	1212	1486	1588	2297	2412	1682	1884
BSQC33L	1212	1486	1588	2297	2412	1682	1884
BSQC36R	1212	1486	1588	2297	2412	1682	1884
BSQC36L	1212	1486	1588	2297	2412	1682	1884

- Available in left or right hinge
- Left hand shown

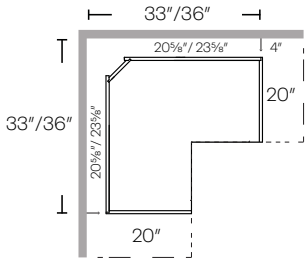

Carousel Corner Base Cabinet

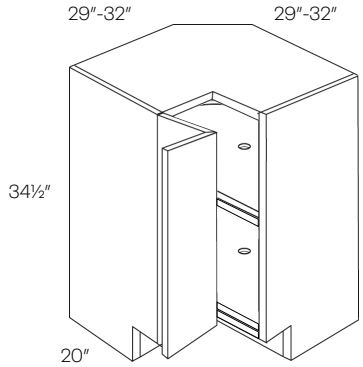

Item Number	E	F	G	H (Plus Program)	I (Plus Program)	J (Alvic)	K (Alvic)
CAR33R	1915	2347	2056	1904	1999	2660	2979
CAR33L	1915	2347	2056	1904	1999	2660	2979
CAR36R	1915	2347	2056	1904	1999	2660	2979
CAR36L	1915	2347	2056	1904	1999	2660	2979

- Requires 33″x33″ / 36″x36″wall space
- Pie cut for 33″ is 9″ for 36″ is 12″
- Available in left or right hinge
- Natural wood lazy susan
- Right hand shown

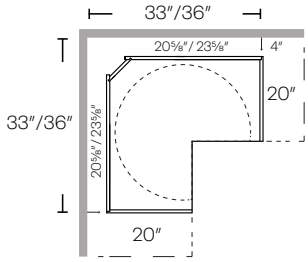

					Plus Program		Alvic	
	Item Number	E	F	G	H	I	J	K
Lazy Susan Corner Base Cabinet	**LS36R**	1859	2347	2169	1904	1999	2660	2979
	LS36L	1859	2347	2169	1904	1999	2660	2979
1 Drawer Front 2 Door Sink Base Cabinet	**SB24**	657	806	775	867	911	913	1022
	SB27	707	868	836	932	979	983	1101
2 Drawer Front 2 Door Sink Base Cabinet	**SB30**	750	919	885	987	1036	1040	1166
	SB33	797	978	945	1046	1098	1106	1238
	SB36	811	995	956	1072	1125	1128	1263
	SB39	835	1024	1020	1098	1153	1160	1299
	SB42	849	1041	1043	1122	1178	1180	1321

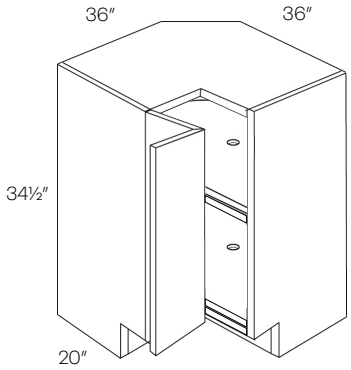

- Requires 33″x33″ / 36″x36″wall space
- Pie cut for 33″ is 9″ for 36″ is 12″
- Available in left or right hinge
- Natural wood lazy susan
- Right hand shown
- Metal Rev-a-Shelf upgrade available

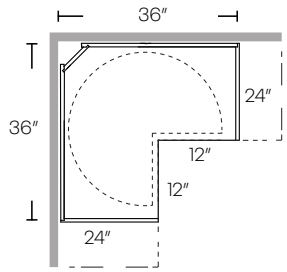

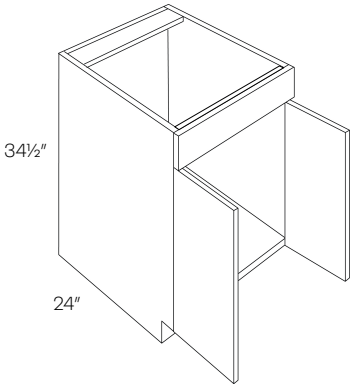

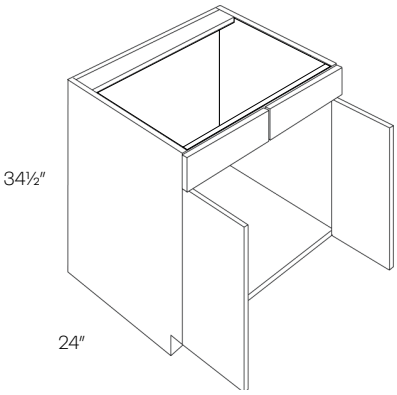

2 Door Farm Sink Base Cabinet

Item Number	E	F	G	Plus Program H	I	Alvic J	K
SB30-FS	772	947	941	1360	1428	1040	1166
SB33-FS	798	985	1003	1449	1522	1106	1238
SB36-FS	835	1024	1012	987	1036	1128	1265

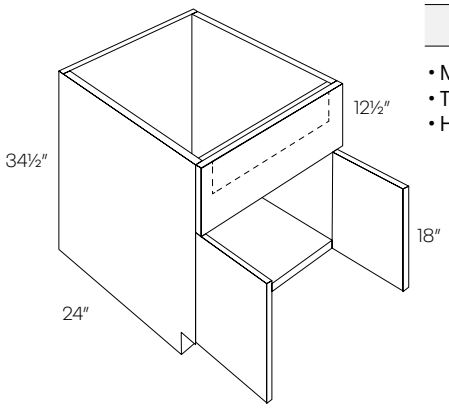

- Max trimmable 27″/30″/33″ X 10″
- Trimming to be done in field
- Has a fixed platform

Oven & Microwave Base Cabinet

OVB30	750	919	679	981	1030	1040	1166
MCB24	826	1012	1204	864	908	1358	1475
MCB24-TRM	240	303	300	360	378	300	300
MCB27	858	1052	1251	929	976	1400	1550
MCB27-TRM	250	333	330	396	416	350	350
MCB30	1049	1287	1232	987	1036	1458	1632
MCB30-TRM	270	353	360	496	521	375	375

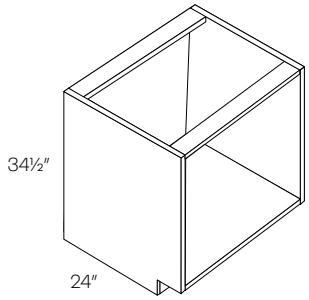

OVB

- OV Front opening is 28½″ x 29″

Cabinet	Front Opening Dimension
MCB24	22½″ x 17¾″
MCB27	25½″ x 17¾″
MCB30	28½″ x 17¾″

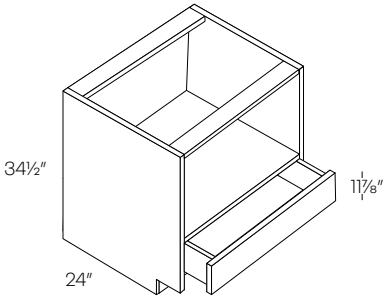

MCB

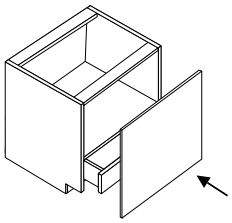

Trim Kit
Keku clip attachment

	Item Number	E	F	G	Plus Program H	Plus Program I	Alvic J	Alvic K
Base End Cabinet	**BEC24**	680	833	782	811	852	943	1057

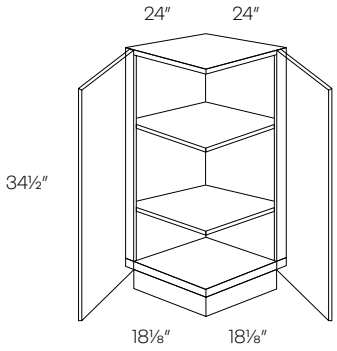

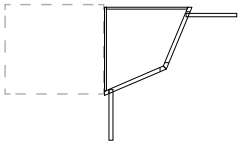

Base End Straight Cabinet	**BECS24**	680	833	782	1129	1186	943	1057

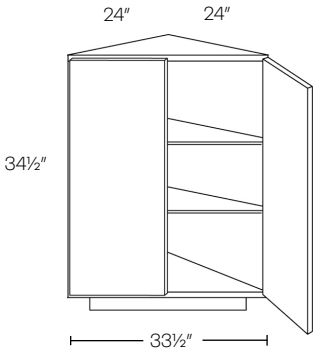

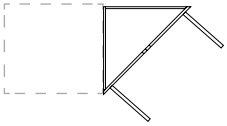

Angle Base End Cabinet	**BTC2412**	597	732	635	651	684	830	929

- Reversible
- Loose Toe Kick
- Hinged on 24″

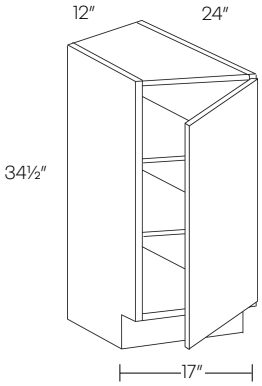

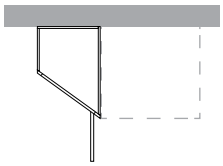

Waste Basket Cabinet

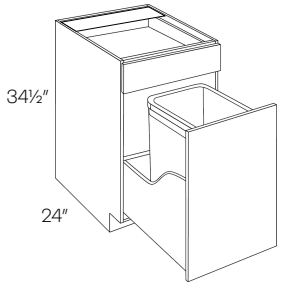

BWBK15

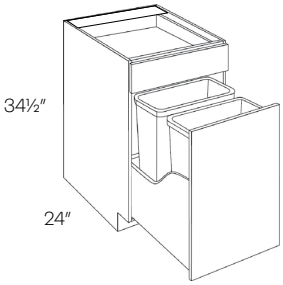

BWBK18

				Plus Program		Alvic	
Item Number	E	F	G	H	I	J	K
BWBK15 (1 basket)	980	1202	1073	1318	1384	1362	1527
BWBK18 (2 basket)	1040	1274	1136	1459	1532	1443	1616

- BWBK15 includes 35qt. waste basket
- BWBK18 includes 2-35qt. waste baskets
- Side mounted soft-close glides
- Solid wood dovetail box

Full Height Double Waste Basket Cabinet

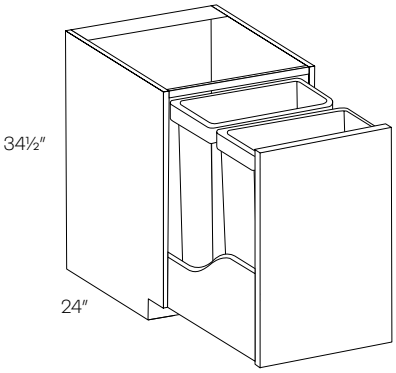

BWBK21-FH	972	1322	1389	2008	2108	1500	1678

- Includes two 50qt. waste baskets
- Side mounted soft-close glides
- Solid wood dovetail box

Single Door Base Cabinet

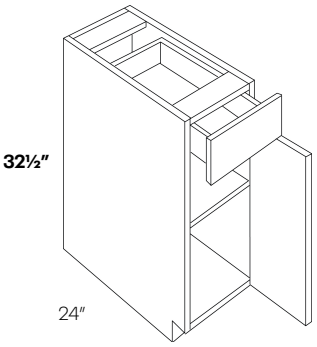

Item Number	E	F	G	H	I	J	K
				Plus Program		Alvic	
B9-HA	456	583	N/A	N/A	N/A	N/A	N/A
B12-HA	525	659	N/A	N/A	N/A	N/A	N/A
B15-HA	549	688	N/A	N/A	N/A	N/A	N/A
B18-HA	577	725	N/A	N/A	N/A	N/A	N/A
B21-HA	657	813	N/A	N/A	N/A	N/A	N/A

* Please note, Handicap Accessible cabinets may not meet ADA requirements

Single Door Double Drawer Base Cabinet

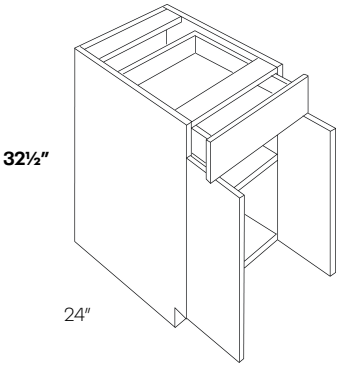

B24-HA	662	865	N/A	N/A	N/A	N/A	N/A
B27-HA	731	945	N/A	N/A	N/A	N/A	N/A

* Please note, Handicap Accessible cabinets may not meet ADA requirements

Double Door Double Drawer Base Cabinet

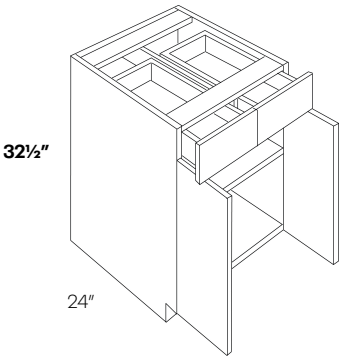

B30-HA	797	1078	N/A	N/A	N/A	N/A	N/A
B33-HA	851	1146	N/A	N/A	N/A	N/A	N/A
B36-HA	892	1199	N/A	N/A	N/A	N/A	N/A
B39-HA	949	1264	N/A	N/A	N/A	N/A	N/A

* Please note, Handicap Accessible cabinets may not meet ADA requirements

Three Drawer Base Cabinet

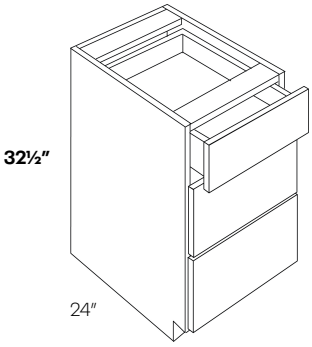

Item Number	E	F	G	Plus Program H	I	Alvic J	K
DB12-HA	849	1041	N/A	N/A	N/A	N/A	N/A
DB15-HA	889	1089	N/A	N/A	N/A	N/A	N/A
DB18-HA	908	1112	N/A	N/A	N/A	N/A	N/A

* Please note, Handicap Accessible cabinets may not meet ADA requirements

Blind Base Cabinet

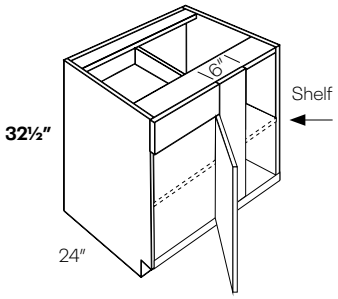

BLB36/39-HA	931	1141	N/A	N/A	N/A	N/A	N/A

• Reversible Left or Right
• Must be pulled to the minimum position
* Please note, Handicap Accessible cabinets may not meet ADA requirements

Cabinet	Min. Pull	Max. Pull	Actual Size	Door	Door Opening
BLB36/39	36"	39"	27"	B9	8.25"

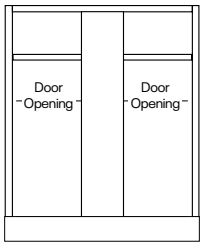

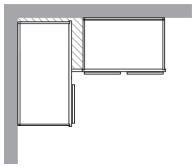

Lazy Susan Corner Base Cabinet

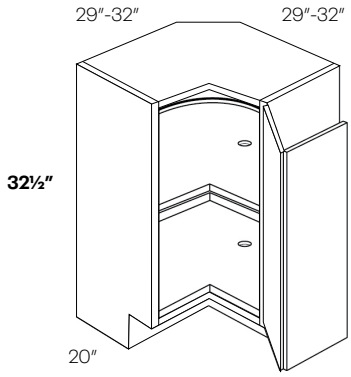

CAR36L-HA	1916	2347	N/A	N/A	N/A	N/A	N/A
CAR36R-HA	1916	2347	N/A	N/A	N/A	N/A	N/A

* Please note, Handicap Accessible cabinets may not meet ADA requirements

• Requires 33"x33" / 36"x36"wall space
• Pie cut for 33" is 9" for 36" is 12"
• Available in left or right hinge
• Natural wood lazy susan

	Item Number	E	F	G	Plus Program H	I	Alvic J	K
Removable Vanity Sink Base	**SB30-HR**	1050	1287	N/A	N/A	N/A	N/A	N/A
	SB33-HR	1118	1370	N/A	N/A	N/A	N/A	N/A
	SB36-HR	1136	1392	N/A	N/A	N/A	N/A	N/A

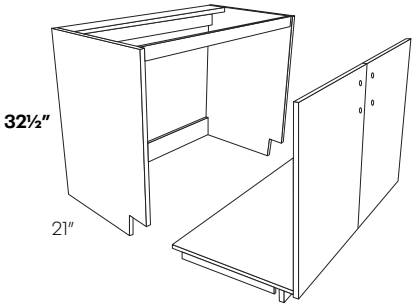

* Please note, Handicap Removable cabinets may not meet ADA requirements

Removable Vanity Base	**V30-HR**	861	1056	N/A	N/A	N/A	N/A	N/A
	V33-HR	954	1168	N/A	N/A	N/A	N/A	N/A
	V36-HR	1045	1280	N/A	N/A	N/A	N/A	N/A

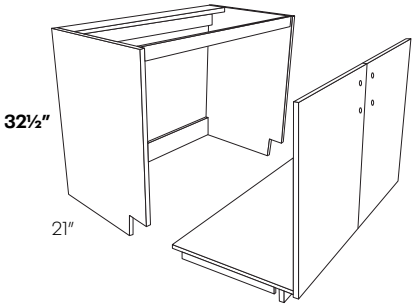

* Please note, Handicap Removable cabinets may not meet ADA requirements

Vanity Sink Base Cabinet	**V24-HA**	447	608	N/A	N/A	N/A	N/A	N/A
	V30-HA	615	754	N/A	N/A	N/A	N/A	N/A
	V36-HA	745	914	N/A	N/A	N/A	N/A	N/A

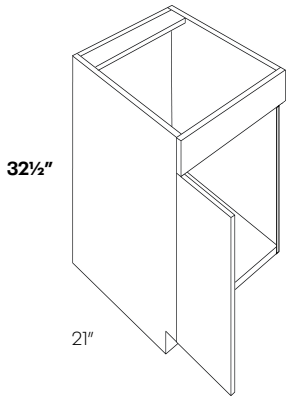

* Please note, Handicap Accessible cabinets may not meet ADA requirements

Vanity Drawer Base Cabinet

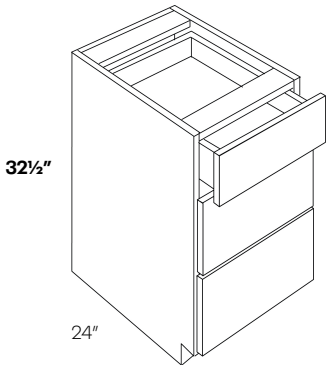

				Plus Program		Alvic	
Item Number	E	F	G	H	I	J	K
VDB12-HA	750	919	N/A	N/A	N/A	N/A	N/A
VDB15-HA	815	1000	N/A	N/A	N/A	N/A	N/A
VDB18-HA	892	1093	N/A	N/A	N/A	N/A	N/A

* Please note, Handicap Accessible cabinets may not meet ADA requirements

Single Door Cabinet

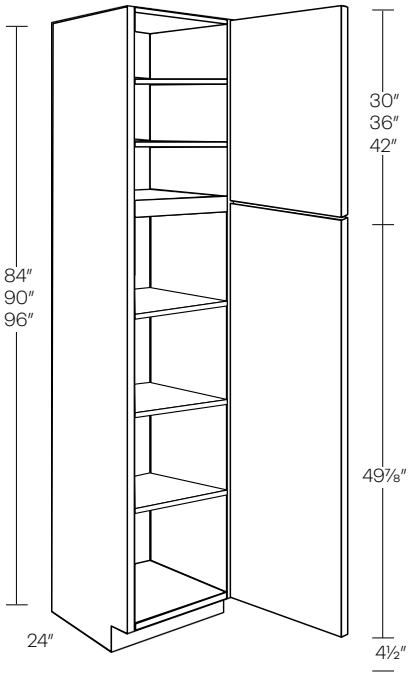

Item Number	E	F	G	Plus Program H	I	Alvic J	K
UC1524X84	1796	2200	1897	4187	4396	2495	2793
UC1524X90	2102	2575	2088	4463	4686	2919	3268
UC1524X96*	2335	2861	2297	4764	5002	3242	3629
UC1824X84	1870	2292	1999	2191	2300	2599	2910
UC1824X90	2189	2682	2094	2497	2622	3040	3406
UC1824X96*	2432	2980	2418	2850	2993	3376	3782
POS15-3	707	707	707	707	707	707	707
POS15-4	954	954	954	954	954	954	954
POS18-3	825	825	825	825	825	825	825
POS18-4	1036	1036	1036	1036	1036	1036	1036

- POS price is in addition to the cabinet list price
- POS will be factory installed
- Side mounted soft-close glides

- White Satin Box: Metal box construction; BLUM upgrade available
- Maple Box: Maple box with dovetail construction; BLUM not available

* 84″ and 90″ has 2 upper shelves
* 96″ has 3 upper shelves

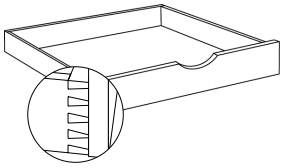

POS - Maple Cabinet Box

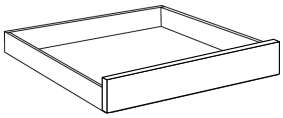

POS - White Cabinet Box

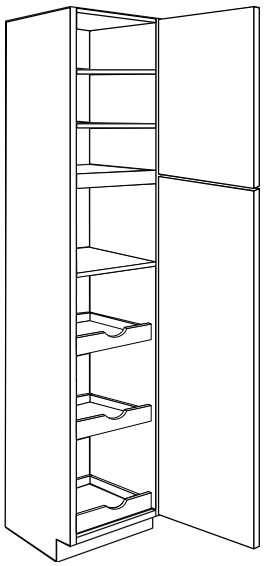

POS-3

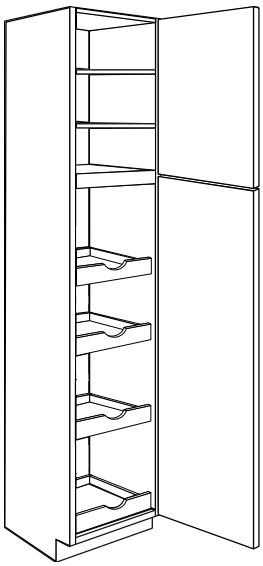

POS-4

Double Door Utility Cabinet

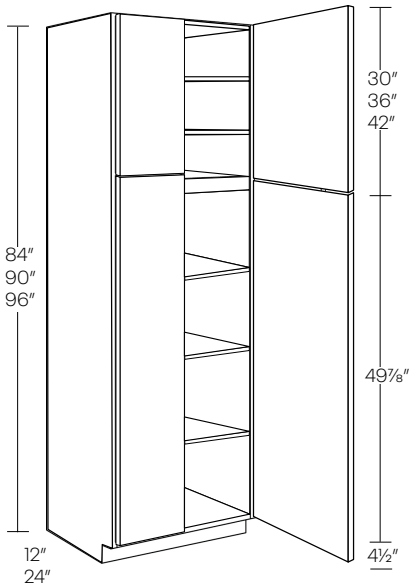

Item Number	E	F	G	Plus Program H	I	Alvic J	K
UC2412X84	2087	2557	2060	2978	3127	2900	3247
UC2412X90	2277	2790	2265	3276	3440	3164	3542
UC2412X96*	2351	2881	2492	3603	3784	3266	3658
UC2424X84	2154	2639	2334	2523	2650	2993	3351
UC2424X90	2448	2999	2569	2880	3024	3400	3809
UC2424X96*	2721	3334	2826	3186	3512	3779	4232
UC3024X84	2479	3037	2468	2650	2922	3441	3854
UC3024X90	2816	3451	2827	3024	3334	3912	4381
UC3024X96*	3130	3834	3106	3346	3688	4344	4867
POS24-3	942	942	942	942	942	942	942
POS24-4	1193	1193	1193	1193	1193	1193	1193
POS30-3	1011	1011	1011	1011	1011	1011	1011
POS30-4	1285	1285	1285	1285	1285	1285	1285

- POS price is in addition to the cabinet list price
- POS will be factory installed
- POS not available in 12″ deep UC
- Side mounted soft-close glides

- White Satin Box: Metal box construction; BLUM upgrade available
- Maple Box: Maple box with dovetail construction; BLUM not available

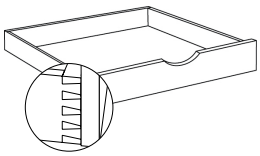

POS - Maple Cabinet Box

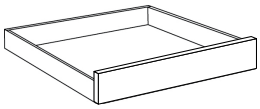

POS - White Cabinet Box

* 84″ and 90″ has 2 upper shelves
* 96″ has 3 upper shelves

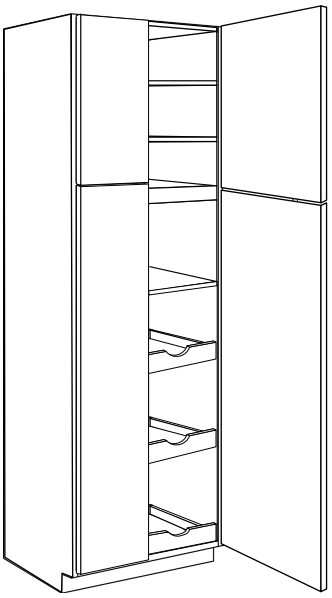

POS-3

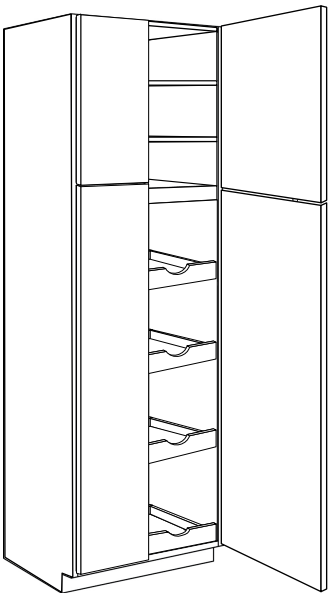

POS-4

Oven Cabinet

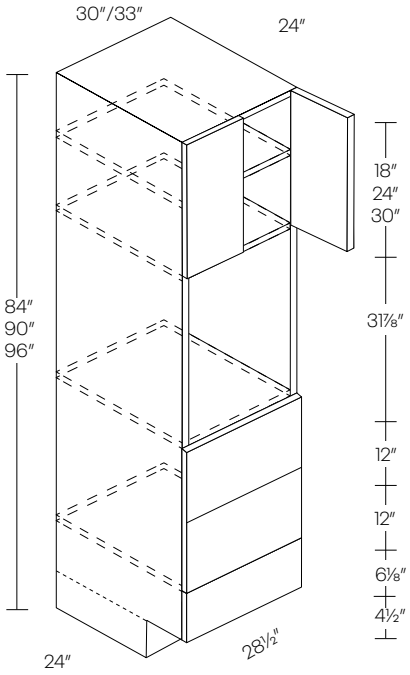

				Plus Program		Alvic	
Item Number	E	F	G	H	I	J	K
OV3084	2079	2548	2387	2382	2501	2889	3236
OV3090	2192	2706	2536	2742	2879	3069	3436
OV3096*	2339	2866	2683	3101	3256	3249	3639
OV3384	2079	2658	2618	2434	2556	3005	3366
OV3390	2209	2817	2781	2797	2937	3192	3575
OV3396	2340	2976	2942	3166	3324	3379	3785
OV30-TRM	470	564	536	504	530	590	625
OV33-TRM	508	609	579	533	560	620	680

- Has 2 upper shelves
- Maximum vertical opening is 52.5″
- For double wall ovens, remove drawers as needed

Side

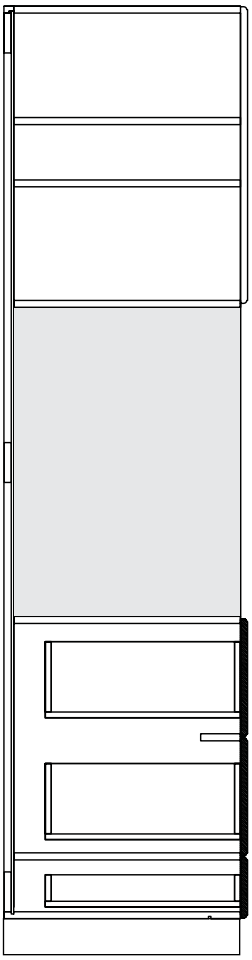

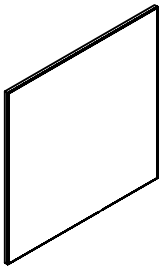

Trim Kit

Keku clip attachment
***Clips shipped loose**

OV30-TRM: 29.5″ X 29.75″
OV33-TRM: 29.5″ x 32.75″

Bottom drawers open

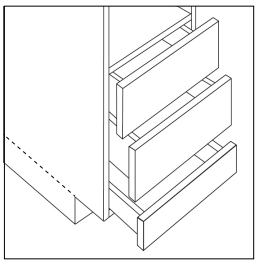

Double Oven Cabinet

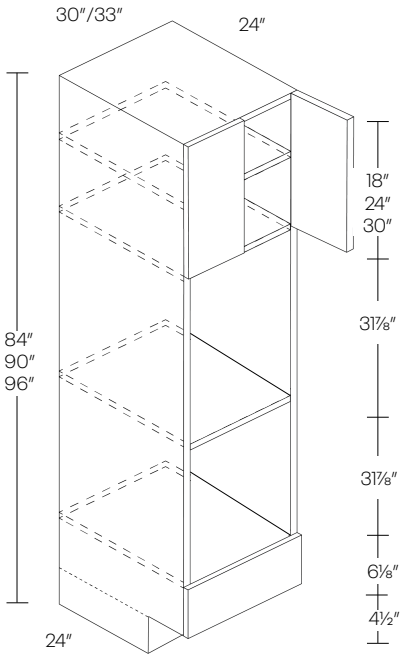

Item Number	E	F	G	H (Plus Program)	I (Plus Program)	J (Alvic)	K (Alvic)
OVD3084	2079	2548	2517	2296	2411	2889	3236
OVD3090	2209	2706	2675	2652	2784	3069	3436
OVD3096*	2340	2866	2829	3012	3162	3249	3639
OVD3384	2169	2658	2618	2434	2556	3005	3366
OVD3390	2299	2817	2781	2797	2937	3192	3575
OVD3396*	2430	2976	2942	3166	3324	3379	3785
OVD30-TRM	470	564	536	720	756	590	625
OVD33-TRM	508	609	579	778	817	620	680

* Has 2 upper shelves
- Maximum vertical opening is 52.5″
- For double wall ovens, remove drawers as needed

Side

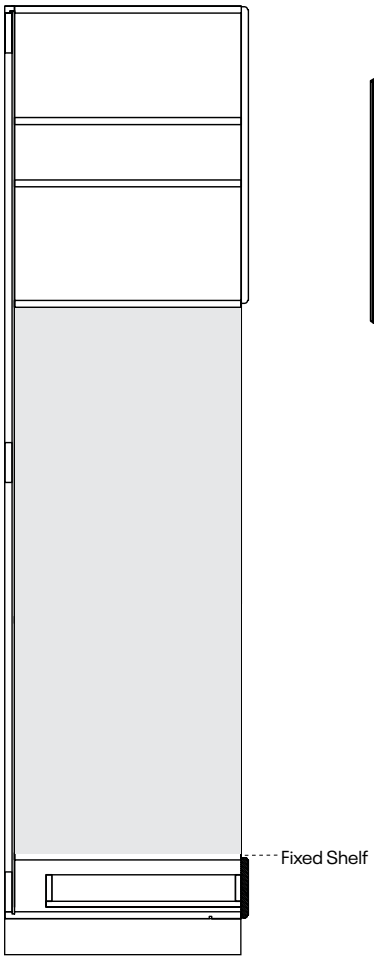

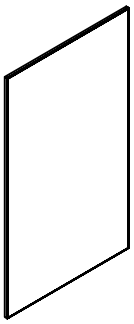

Trim Kit

Keku clip attachment
***Clips shipped loose**

OVD30-TRM: 54.5″ X 29.75″
OVD33-TRM: 54.5″ x 32.75″

Pull Out Shelf

Item Number	E	F	G	Plus Program H	Plus Program I	Alvic J	Alvic K
POS12	198	198	198	198	198	198	198
POS15	207	207	207	207	207	207	207
POS18	228	228	228	228	228	228	228
POS21	240	240	240	240	240	240	240
POS24	271	271	271	271	271	271	271
POS27	282	282	282	282	282	282	282
POS30	294	294	294	294	294	294	294
POS33	307	307	307	307	307	307	307
POS36	329	329	329	329	329	329	329
POS42	345	345	345	345	345	345	345

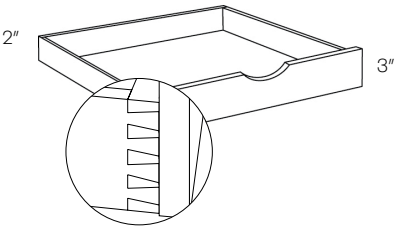

POS - Maple Cabinet Box

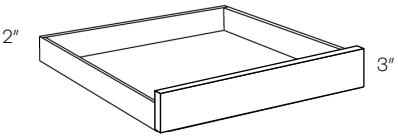

POS - White Cabinet Box

- Ball bearing soft-close glides included
- POS uses dovetail construction
- Two spacers required
- Side mounted soft-close glides
- BLUM glides not available on POS

Boxed Wood Hood

Item Number	E	F	G	H (Plus Program)	I (Plus Program)	J (Alvic)	K (Alvic)
WHB30-T	N/A	N/A	2500	2500	3000	N/A	N/A
WHB36-T	N/A	N/A	3000	3000	3600	N/A	N/A

•Metal Liners Included

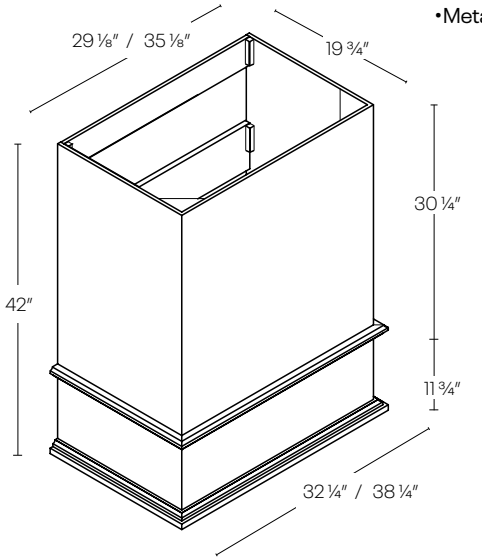

30″ Hood Liner

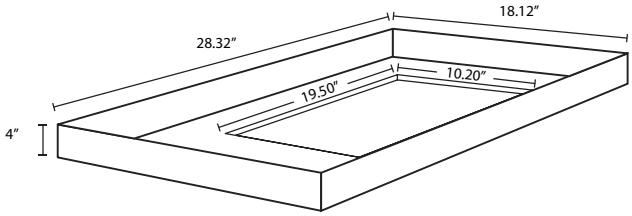

36″ Hood Liner

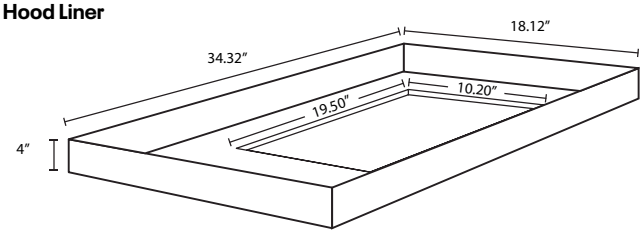

Coved Wood Hood

Item Number	E	F	G	H (Plus Program)	I (Plus Program)	J (Alvic)	K (Alvic)
WHC30-T	N/A	N/A	2500	2500	3000	N/A	N/A
WHC36-T	N/A	N/A	3000	3000	3600	N/A	N/A

•Metal Liners Included

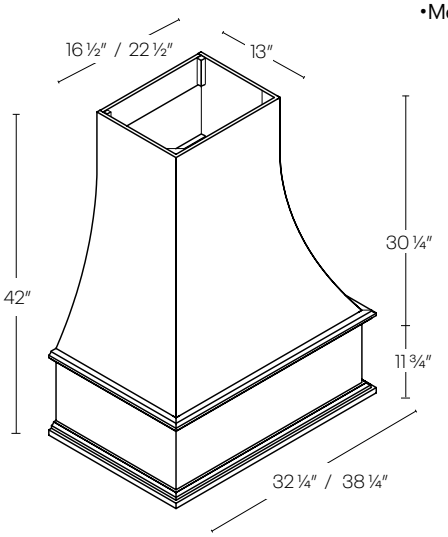

30″ Hood Liner

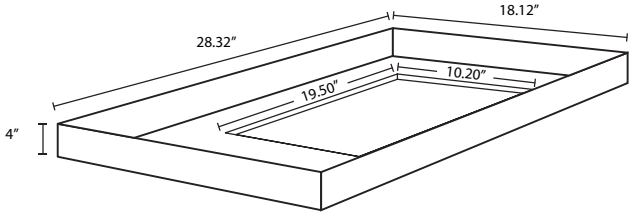

36″ Hood Liner

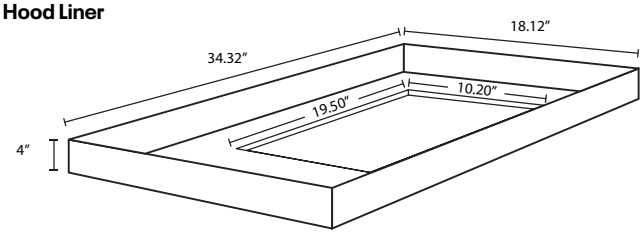

	Item Number	E	F	G	H	I	J	K
					Plus Program		Alvic	
Sloped Wood Hood	**WHS30**	N/A	N/A	2500	2500	3000	N/A	N/A
	WHS36	N/A	N/A	3000	3000	3600	N/A	N/A

•Metal Liners Included

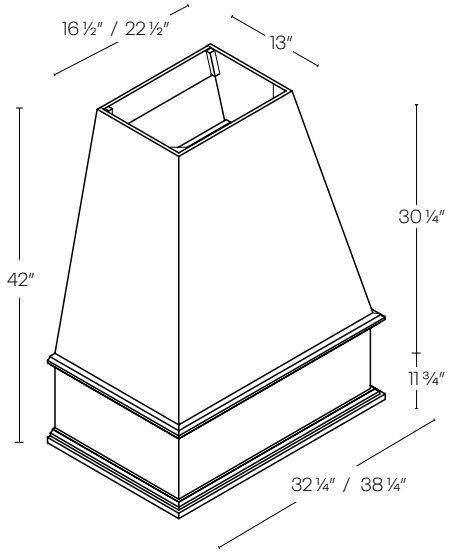

30″ Hood Liner

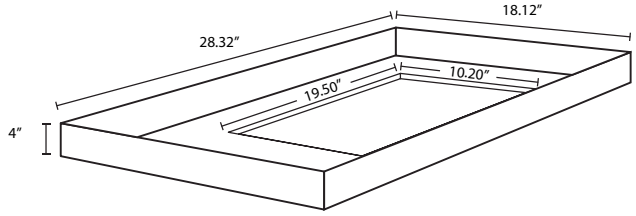

36″ Hood Liner

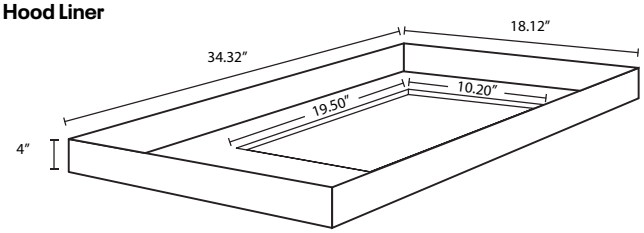

Traditional Wood Hood	**WHT30**	N/A	N/A	2500	2500	3000	N/A	N/A
	WHT36	N/A	N/A	3000	3000	3600	N/A	N/A

•Metal Liners Included

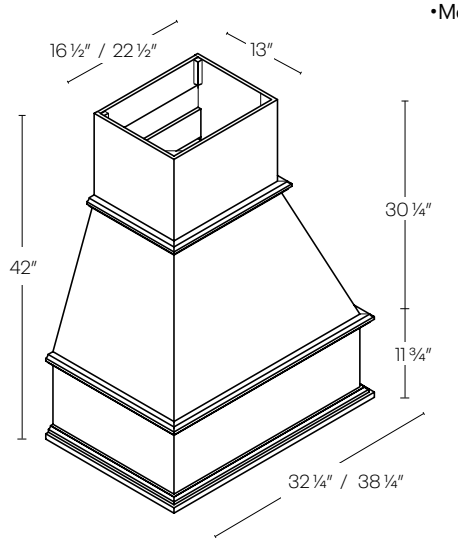

30″ Hood Liner

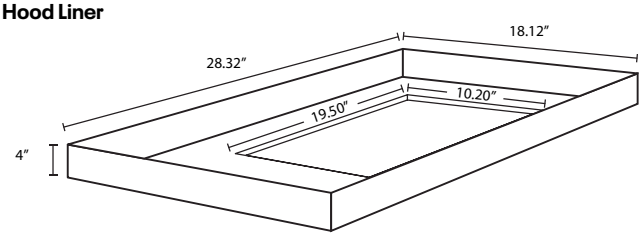

36″ Hood Liner

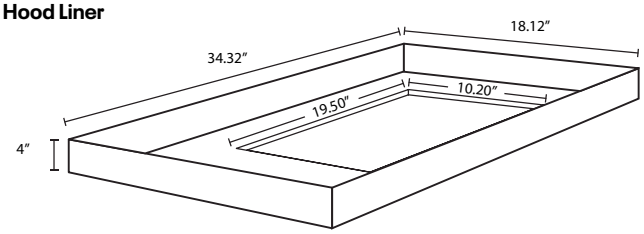

1 Door Vanity Base Cabinet

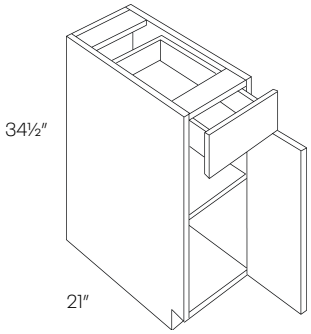

Item Number	E	F	G	Plus Program H	I	Alvic J	K
VB12	453	555	552	630	694	597	671
VB15	475	582	578	660	728	627	704
VB18	497	609	605	692	763	656	737

2 Door Vanity Base Cabinet

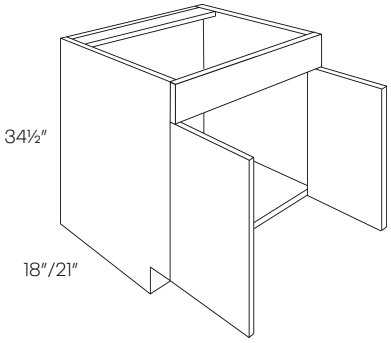

V2418	420	516	716	562	620	583	653
V3018	582	714	811	722	796	809	905
V24	447	608	716	517	570	688	770
V27	555	682	764	591	651	771	863
V30	615	754	811	744	820	853	955
V33	680	834	854	847	934	944	1058
V36	745	914	896	898	990	1035	1160

1 Door 2 Drawer Vanity Base Cabinet

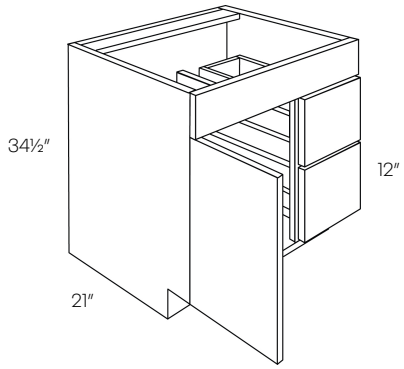

V30DL	810	993	1142	1273	1404	1125	1262
V30DR	810	993	1142	1273	1404	1125	1262

	Item Number	E	F	G	Plus Program H	I	Alvic J	K
2 Door 2 Drawer Vanity Base Cabinet	**V36DL**	1106	1356	1174	1371	1512	1537	1721
	V36DR	1106	1356	1174	1371	1512	1537	1721

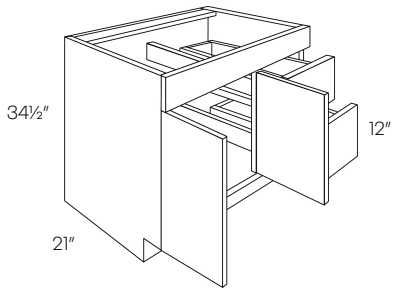

2 Door 2 Drawer Vanity Base Cabinet	**V42DL**	1183	1460	1313	1392	1534	1653	1852
	V42DR	1183	1460	1313	1392	1534	1653	1852

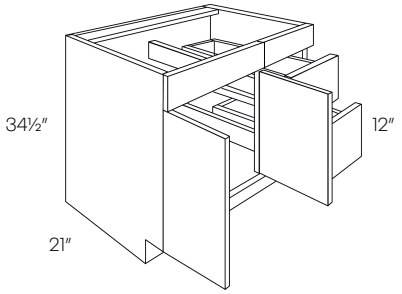

2 Door & Drawer Vanity Base Cabinet	**V48DD**	1328	1628	1429	1590	1753	1693	1896

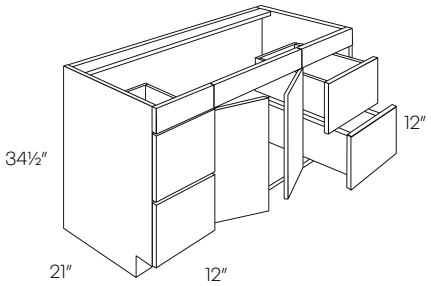

Vanity Drawer Base Cabinet

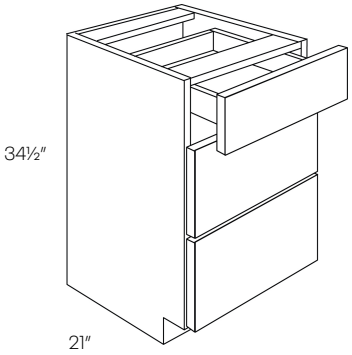

Item Number	E	F	G	Plus Program H	I	Alvic J	K
VDB12	750	919	904	980	1080	1040	1166
VDB15	815	1000	944	1036	1142	1133	1269
VDB18	892	1093	965	1059	1167	1238	1386
VDB21	968	1186	1061	1112	1226	1341	1507
VDB24	1045	1279	1108	1147	1264	1445	1625

Filler

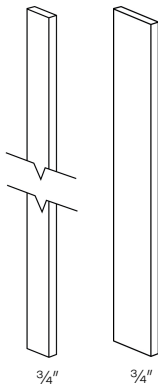

Item Number	E	F	G	Plus Program H	Plus Program I	Alvic J	Alvic K
F330	45	58	52	75	79	91	121
F342	81	105	95	98	103	129	160
F396	133	172	155	231	242	229	292
F630	63	82	74	129	135	112	142
F642	112	145	131	173	182	196	249
F696	175	225	204	382	401	362	487

- Overlays available for Alvic
- Fillers finished on all 4 sides

Refrigerator & Dishwasher End Panel

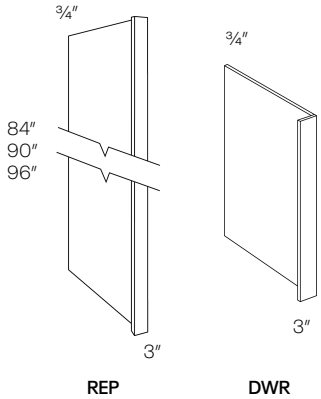

REP384	465	598	542	677	711	N/A	N/A
REP390	482	620	562	712	747	N/A	N/A
REP396	514	662	600	648	681	N/A	N/A
DWR3	213	268	243	392	412	N/A	N/A
DWR6	N/A	N/A	302	378	397	N/A	N/A

- Overlays available for Alvic

Plywood Panel

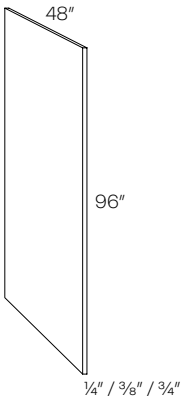

PLY4X8X.25	N/A	N/A	849	591	620	N/A	N/A
PLY4X8X.375	1000	1155	N/A	N/A	N/A	N/A	N/A
PLY4X8X.75	1244	1459	1323	1906	2001	48*	80*

*Price per square foot

Collection	Width
Versailles/Highland	¼″
Broadway/Milano	⅜″
Alvic	¾″

- Versailles/Highland use **PLY4x8.25**
- Versailles/Highland use **PLY4x8.375**
- Versailles/Highland use **PLY4x8.75**

End Panel

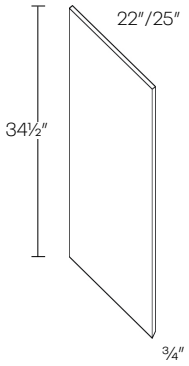

VEP/BEP

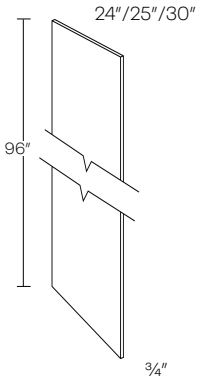

UREP30

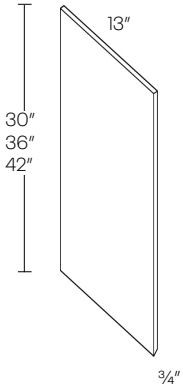

WEP

Item Number	E	F	G	Plus Program H	I	Alvic J	K
VEP	250	315	300	329	362	357	419
BEP	250	315	300	343	360	357	419
WEP30	145	252	240	191	210	136	216
WEP36	174	273	260	229	253	155	260
WEP42	203	294	280	267	294	180	302
UREP24	N/A	N/A	361	520	574	920	1032
UREP25	737	813	N/A	N/A	N/A	920	1032
UREP30	882	989	896	692	763	1067	1196

*Price per square foot
- Broadway (column E) cannot be factory installed
- All end panels are MDF
- Panels are finished on one long side

Full Overlay Crown Moldings

MFLOCR	N/A	N/A	400	572	601	400	N/A

- 8 Feet long

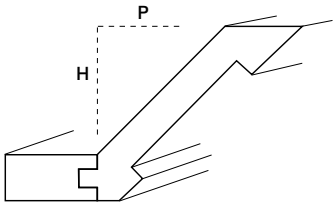

MFLOCR
Height: 3½″
Projection: 2½″

	Item Number	E	F	G	Plus Program H	Plus Program I	Alvic J	Alvic K
Contemporary Crown Molding	**CCM**	263	339	307	572	601	N/A	N/A

- 8 Feet long
- Outer ends are finished
- Not available in Alvic

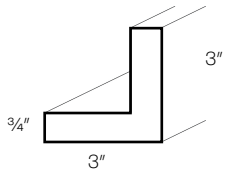

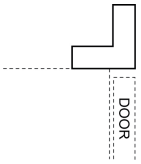

Suggested Use

Shoe Molding	**SHM**	119	125	119			119	119

- 8 Feet long
- Not available in Alvic

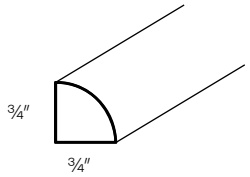

Column	**CLM-B30** (34½″H X 30″D)	565	727	659	650	682	N/A	N/A
	CLM-30X15 (30″H X 15″D)	225	289	262	329	345	N/A	N/A
	CLM-36X15 (36″H X 15″D)	299	385	349	368	386	N/A	N/A
	CLM-42X15 (42″H X 15″D)	299	385	349	408	428	N/A	N/A

- Finished 3 sides
- Trimmable
- Not available in Alvic

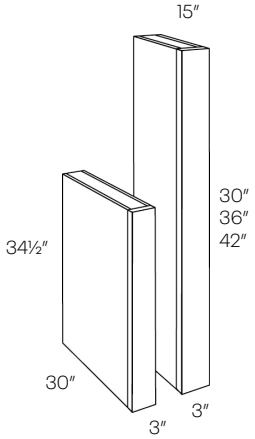

	Item Number	E	F	G	Plus Program H	I	Alvic J	K
Corner Molding	**OCM**	107	131	118	155	162	N/A	N/A
	ICM	107	131	118	155	162	N/A	N/A

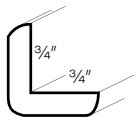

OCM

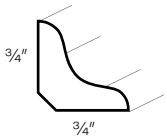

ICM

- 8 Feet long
- Not available in Alvic

Toe Kick	**TKS**	83	108	97	129	135	230	292

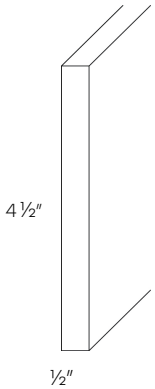

- 8 Feet long

Collection	Width
Versailles/Highland	1/4″
Broadway/Milano	3/8″
Alvic	3/4″

Scribe Molding	**SCM**	71	96	87	126	132	N/A	N/A
	BAT	N/A	N/A	87	126	132	N/A	N/A

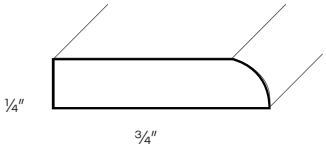

SCM

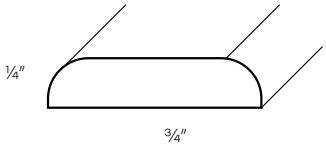

BAT

- 8 Feet long
- Not available in Alvic

	Item Number	E	F	G	Plus Program H	Plus Program I	Alvic J	Alvic K
Post	**POST-S**	N/A	N/A	1103	1589	1668	N/A	N/A

• 3″ X 3″

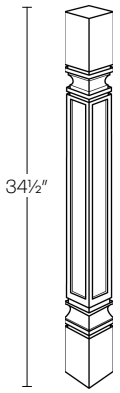

POST-S

Corner Post	**POST-S-CR**	N/A	N/A	495	565	593	N/A	N/A

• 3″ X 3″

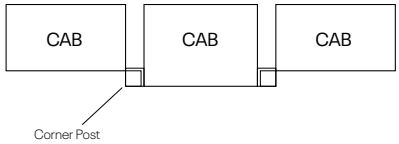

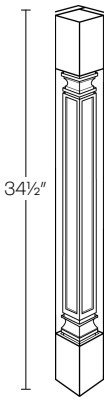

POST-S-CR

Large Post	**POST5-C**	N/A	N/A	1119	1278	1342	N/A	N/A

• 5″ X 5″

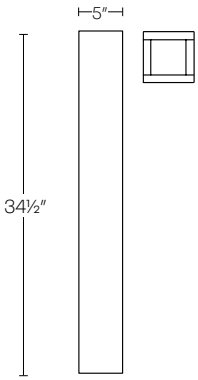

POST5-C

	Item Number	E	F	G	Plus Program H	I	Alvic J	K
Royal Crown Molding	**RCRMC**	N/A	N/A	397	572	601	N/A	N/A
	RCRMR	N/A	N/A	397	572	601	N/A	N/A

• 8 Feet long

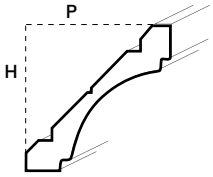

COVE
RCRMC
Height: 3⅛″
Projection: 3⅛″

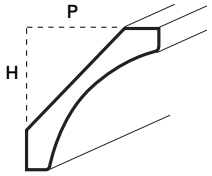

ROUND
RCRMR
Height: 2 1/16″
Projection: 1 15/16″

Light Rail Molding	**LTRM1**	N/A	N/A	275	299	313	N/A	N/A

• 8 Feet long

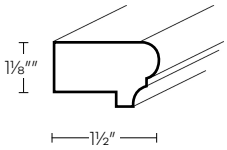

	Item Number	E	F	G	Plus Program H	I	Alvic J	K
Base Molding	**BSMS**	N/A	N/A	283	408	428	N/A	N/A

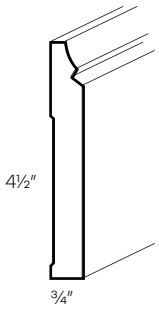

Trim Molding	**TBMS**	N/A	N/A	130	188	197	N/A	N/A

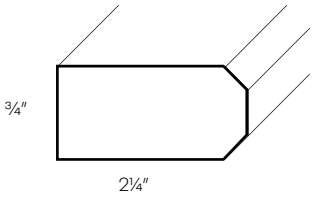

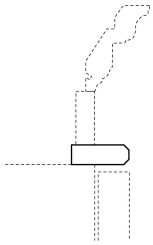

*Suggested use

Decorative End	**WDE1230**	158	175	175	206	217	N/A	N/A
	WDE1236	216	238	249	283	297	N/A	N/A
	WDE1242	263	290	292	345	362	N/A	N/A
	WDE1250	325	360	361	425	447	N/A	N/A
	BDE24	N/A	N/A	420	494	519	N/A	N/A

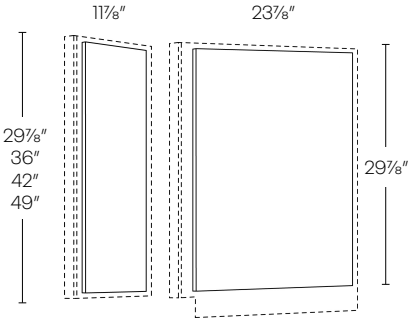

• Use finished skin to flush with frame

cnc cabinetry

					Plus Program		Alvic	
	Item Number	E	F	G	H	I	J	K
Edgeband	**EDGEBAND**	N/A	N/A	N/A	24	25	*	*

* Alvic Edgeband only sold in roll

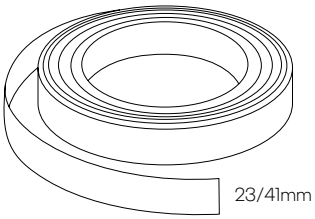

Custom Panel	**PL-CUS**	*	*	*	*	*	48	54

- Pricing is per square foot
- Customer must provide drawings and dimensions for custom price quote and lead time
- Can not be combined with existing quote
- Custom Panels will have an extended lead time

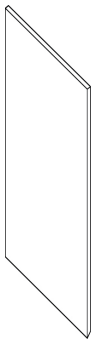

Matching Edgeband	**EDGEBAND**	*	*	N/A	N/A	N/A	**	**

- Available as an upgrade

* Matching edgeband is a 10% upcharge of cabinet price
**Factory Installed for Alvic orders

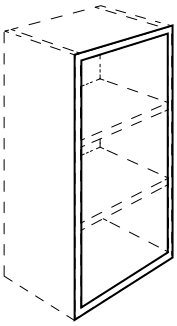

Integrated Finished End

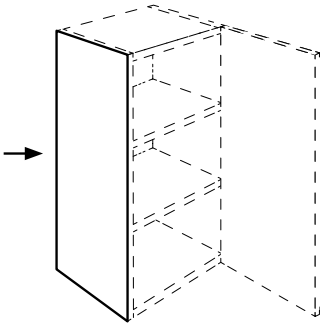

Item Number	E	F	G	H	I	J	K
				Plus Program		Alvic	
BFP*	N/A	151**	290	248	261	N/A	N/A
VFP*	N/A	131**	270	222	233	N/A	N/A
WFP12*	N/A	47**	160	78	82	N/A	N/A
WFP15*	N/A	54**	175	78	82	N/A	N/A
WFP18*	N/A	60**	190	78	82	N/A	N/A
WFP24*	N/A	62**	204	91	96	N/A	N/A
WFP30*	N/A	69**	228	117	123	N/A	N/A
WFP36*	N/A	83**	252	144	152	N/A	N/A
WFP42*	N/A	92**	264	42	165	N/A	N/A
TFP84*	N/A	377**	732	602	633	N/A	N/A
TFP90*	N/A	404**	780	654	687	N/A	N/A
TFP96*	N/A	432**	816	693	728	N/A	N/A

• Factory applied for Milano, Versailles & Highland
**Price listed is for one finished side; for double sided finished side, multiply price by two

Touch Up Kit

TUP	100	100	100	100	100	N/A	N/A
TUP-PINT	N/A	N/A	118	118	118	N/A	N/A
CHW-UNI-AERSOL-SPRAY	N/A	N/A	100	100	100	N/A	N/A

*Must purchase TUP-PINT with Aerosol

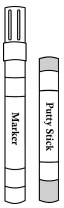

TUP

TUP-PINT

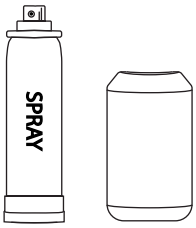

CHW-UNI-AERSOL-SPRAY

Modifications & Upgrades

Classic Collection

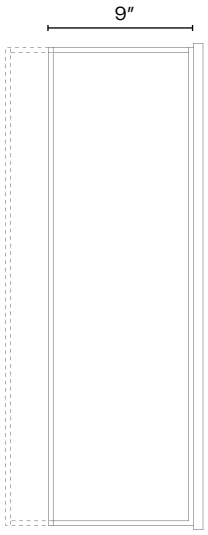

Wall Cabinet

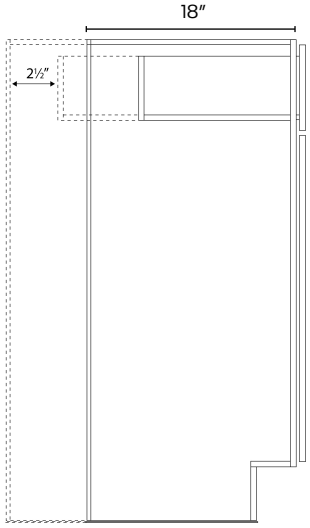

Base Cabinet

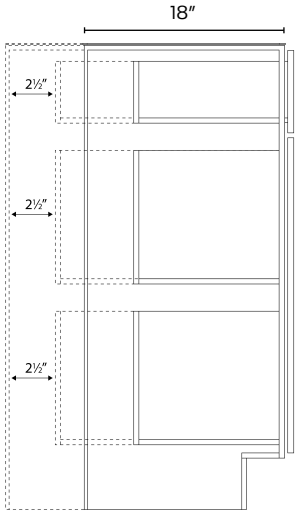

Drawer Base Cabinet
*Dovetail not in back

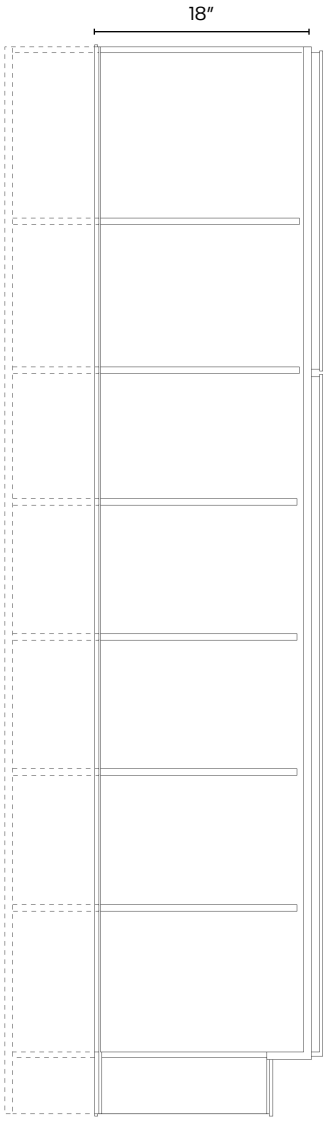

Tall Cabinet

Cut Down	Description	List Price
CT-BCUT *	Base cabinet, cut down depth	572
CT-DBCUT*	Drawer base cabinet, cut down depth	806
CT-TCUT*	Tall cabinet, cut down depth	806
CT-WCUT**	Wall cabinet, cut down depth	400
CT-B-WIDTHCUT	Base cabinet, cut down width	672
CT-DB-WIDTHCUT	Drawer Base cabinet, cut down width	906
CT-T-WIDTHCUT	Tall cabinet, cut down width	906
CT-W-WIDTHCUT	Wall cabinet, cut down width	672
CT-HEIGHTCUT	Cut down height (only available in Alvic)	906

*Can be cut down to 9″, 12″, 15″, 18″ & 21″ | **Can be cut down to 6″, 9″ & 11″
*All 9″ Base Cabinets will have a dummy drawer front
Width Cut downs are not availabe in Highland and Versailles

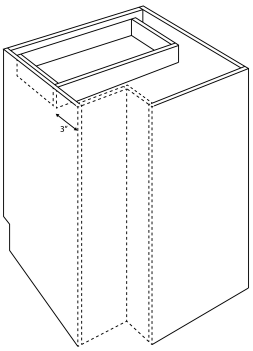

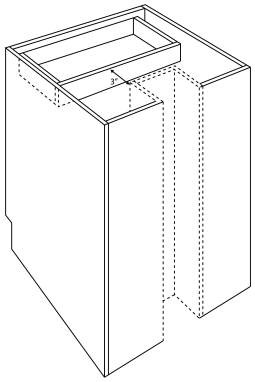

Base Cabinet

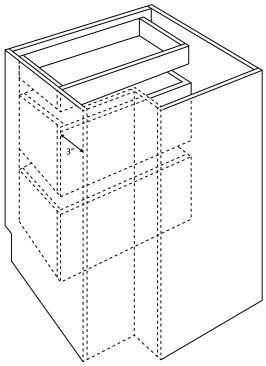

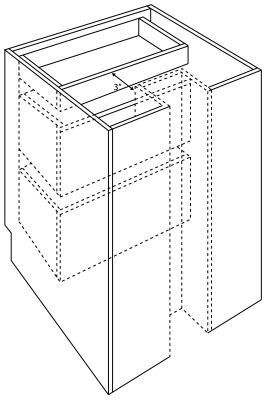

Drawer Base Cabinet

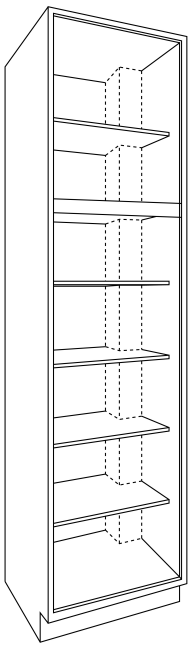

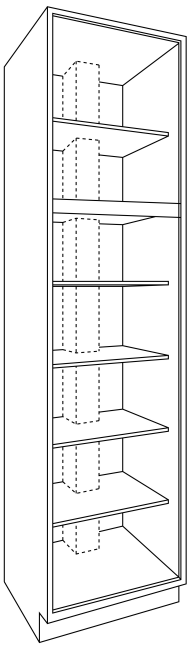

Tall Cabinet

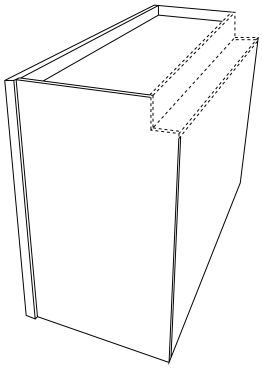

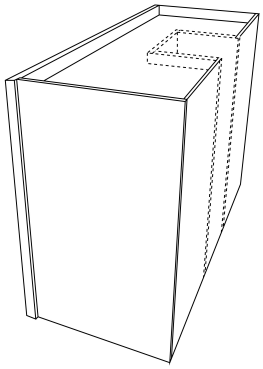

Wall Cabinet

Chase Cuts	Description	List Price
CT-BCHASE	Base cabinet, chase cut	920
CT-DBCHASE	Drawer base cabinet, chase cut	1142
CT-TCHASE	Tall cabinet, chase cut	1266
CT-WCHASE	Wall cabinet, chase cut	806

•Non-stock cabinets, parts including doors and drawets, custom modifications, wood hoods and countertops (post form and self-edge) are not returnable.
•Must provide accurate drawings with your order
•Only available in NorthEast

Item	Description	List Price

Door cut for glass

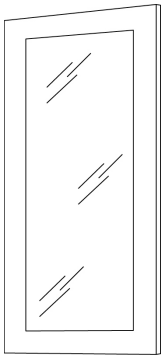

CT-DCG	Door cut for glass	205
CT-DCG-GLI	Door cut and insert glass	381
CT-GLI	Glass Insert	197

•Only Wall Cabinets can be cut for glass
•Loose glass not for sale
*Per door cost shown above

Toe Kick

CT-HANDICUT	Base cabinet, cut off toe kick	116
CT-HANDICUTSHIP	Base cabinet, cut off toe kick and ship	200

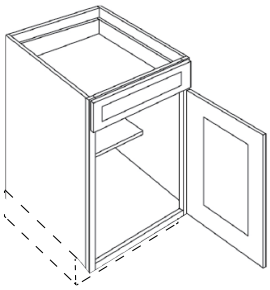

CT-HANDICUT

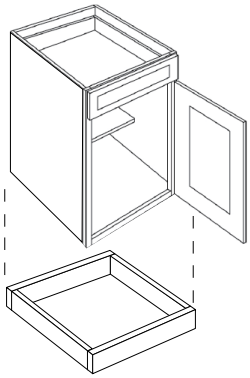

CT-HANDICUTSHIP

Wall

CT-EXDW	Extended depth wall	806

• Can only be extended to 15", 18", 21" & 24"

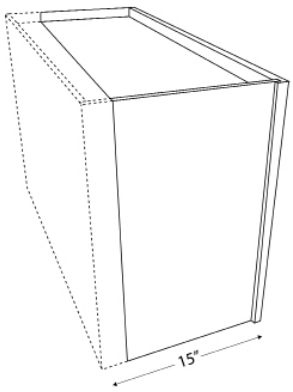

Item	Description	List Price

Finished Interior

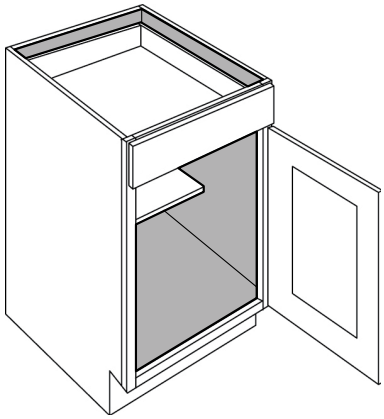

CT-FINISH-B	Finished Interior - Base Cabinet	450
CT-FINISH-W	Finished Interior - Wall Cabinet	450
CT-FINISH-T	Finished Interior - Tall Cabinet	800

• Drawers will not be finished

Recessed Toe Kick

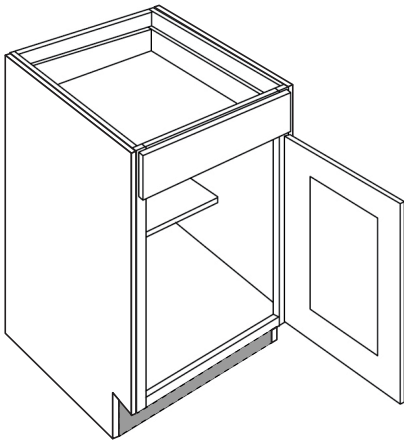

CT-TK-REDUCE	Recessed Toe Kick	800

• Must specify front, left, right dimensions

Front View - Toe Kick

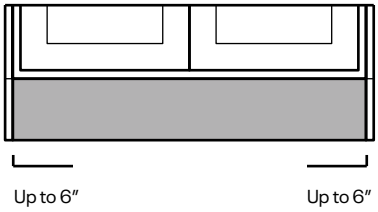

Flush Toe Kick

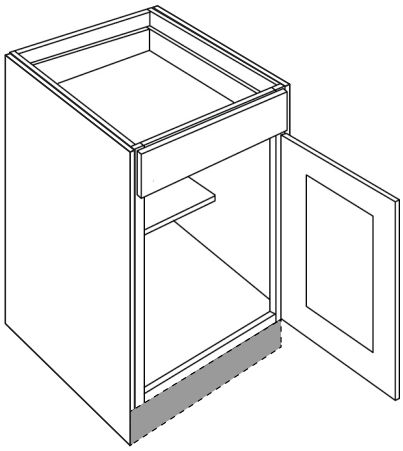

CT-TKFLUSH	Flush Toe Kick	600

Front View - Toe Kick

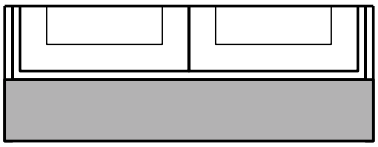

Item	Description	List Price
CHARGE-SINK BASE	Base to Sink Base	210

Base Cabinet to Sink Base

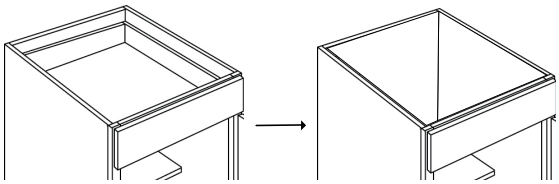

Item	Description	List Price
CT-TD-REDUCE	Reduce Depth of Top Drawer	120

• Can be cut down to 9″, 12″, 15″, 18″ & 21″

Reduced Top Drawer

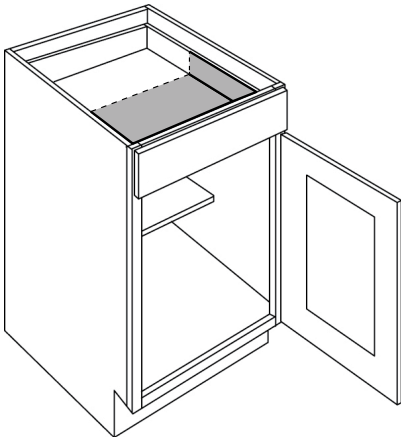

Specifications & Pricing

Vanguard Collection

Vanguard Vanities

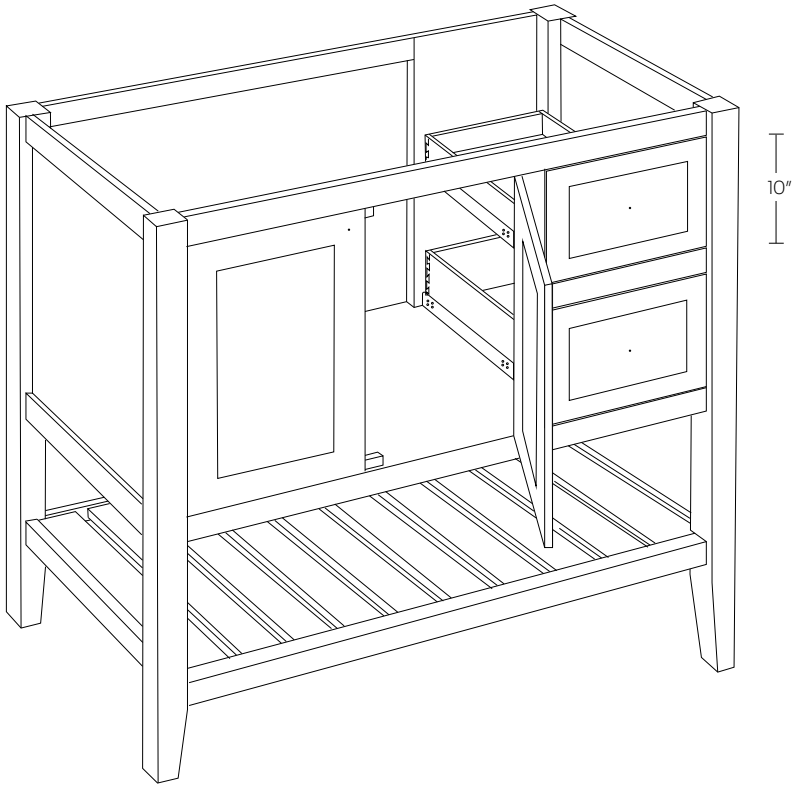

Interior — Finished with the same finish as the outside

Drawers — 5/8 " solid wood Dovetail sides 3/8" thick bottom

Hinges — Heavy duty steel concealed adjustable soft close hinge.

Glides — High quality soft-close under-mount glides.

*Open back behind all doors

*Indigo has 2 pre-drilled holes for handles

*All other finishes have one pre-drilled hole for handles

24"/30" Vanities have 4" spread on vanity top

36" and higher Vanities have 8" spread

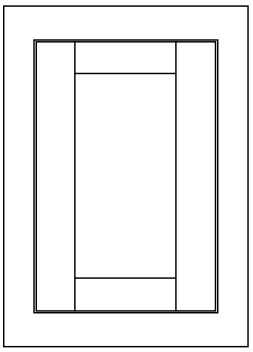

Finish	Price Code	Species
VG10 - White (paint)	V	Solid Wood
VG11 - Espresso (stain)	V	Solid Wood
VG22 - Dove (paint)	V	Solid Wood
VG26 - Indigo (paint)	V	Solid Wood

Bottom Drawer Vanity

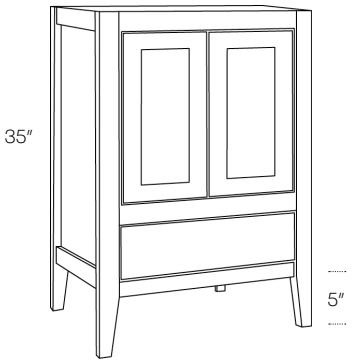

Item Number	V
VBD2421	838
VBD3021	887
VBD3621	1015

- Use tops pg. 164
- Open back
- Drawers are 3″ high inside

Double Bottom Drawer Vanity

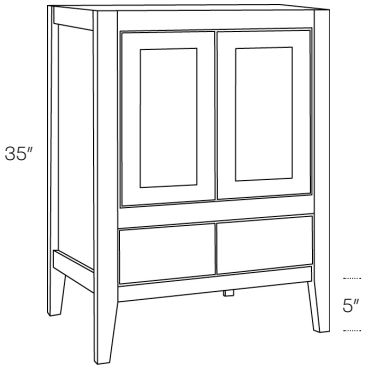

VBD4221	1442
VBD4821	1473

- Use tops pg. 164
- Open back
- Drawers are 3″ high inside

Open Bottom Vanity

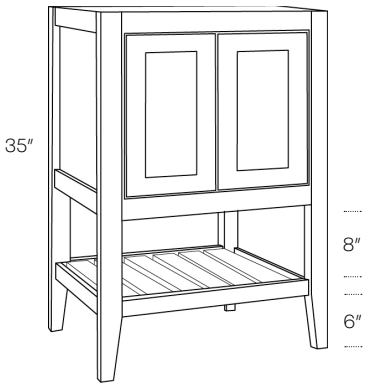

VOB2421	806
VOB3021	894
VOB3621	983
VOB4221	1071

- Use tops pg. 164
- Open back

Open Bottom Right Drawers Vanity

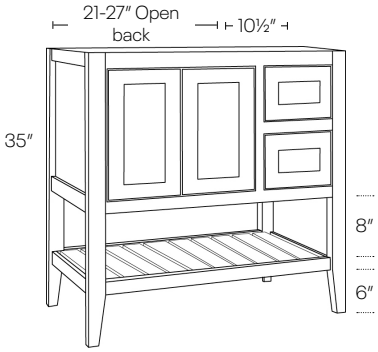

Item Number	V
VOB3621-DR	1251
VOB4221-DR	1374

- Use tops pg. 164
- Top drawer is 1⅜″ high inside
- Bottom drawer is 3″ high inside

Open Bottom Left Drawers Vanity

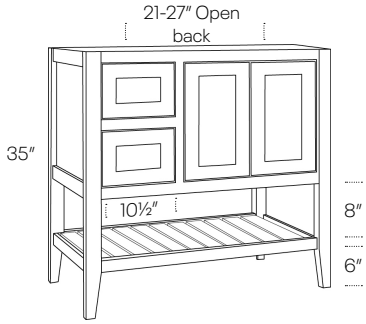

VOB3621-DL	1251
VOB4221-DL	1374

- Use tops pg. 164
- Top drawer is 1⅜″ high inside
- Bottom drawer is 3″ high inside

Open Bottom Double Drawers Vanity

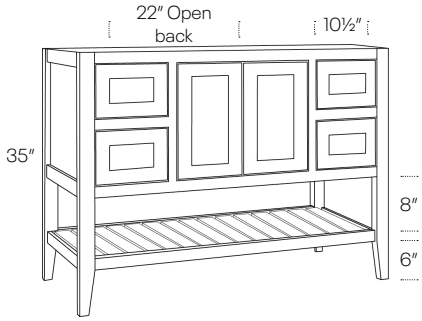

VOB4821-DD	1821

- Use tops pg. 164
- Top & bottom drawers are 3″ high inside

Bottom Drawer Vanity

Item Number	V
VBD6021-DC	2092

• Use tops pg. 164

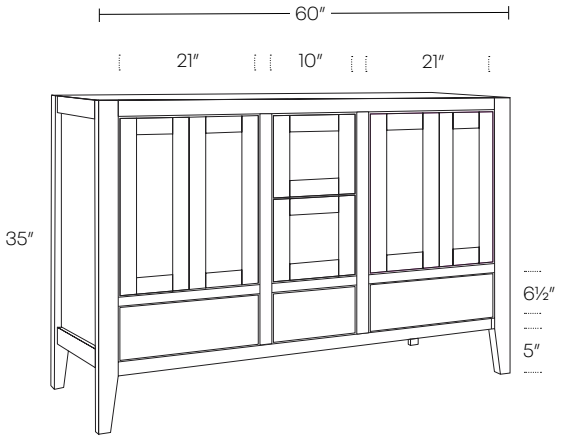

Double Drawers Vanity

Item Number	V
VDD3021	973
VDD3621	1185
VDD4221	1646

• Use tops pg. 164
• Open back
• Drawers cut for plumbing

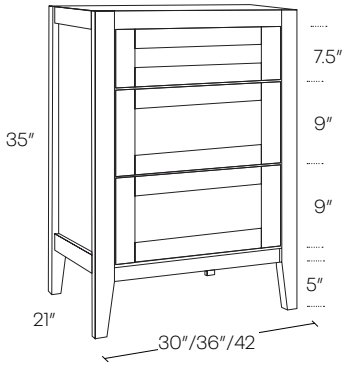

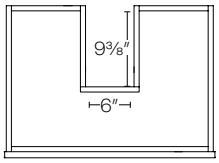

Mirror

MR1830	432
MR2430	543
MR3030	586
MR3630	647

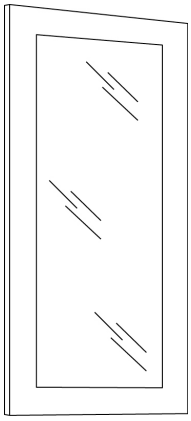

Specifications & Pricing

Surelle Collection

FURNITURE BOARD CONSTRUCTION

Double Door Floating Vanity

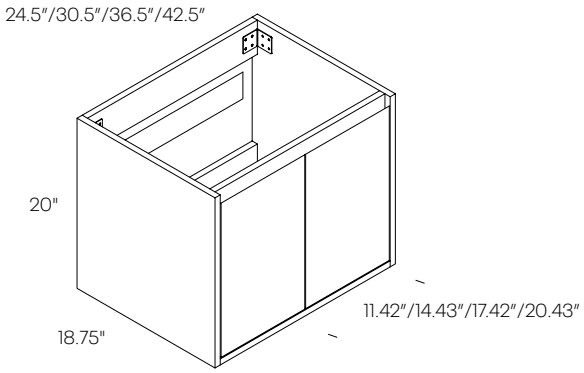

Item Number	Bianca SL30	Grigio SL31	Cemento SL32	Noce SL33
vanity base				
V2418-20	N/A	580	404	414
V3018-20	N/A	652	448	459
V3618-20	724	722	491	503
V4218-20	796	793	534	548
vanity top				
FT2-2519	N/A	442	442	442
FT2-3119	N/A	541	541	541
FT2-3719	578	578	578	578
FT2-4319	623	623	623	623

- SLU30-V2418-20 has been discontinued
- SLU30-V3018-20 has been discontinued

Double Drawer Floating Vanity

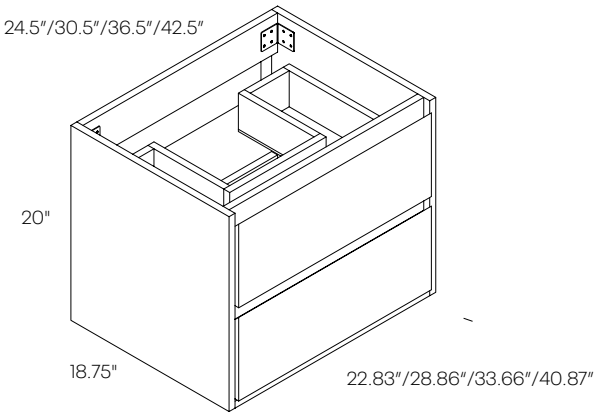

vanity base				
VDB2418-20	1080	1083	878	894
VDB3018-20	1179	1183	947	966
VDB3618-20	1294	1383	1027	1050
VDB4218-20	1377	1435	1086	1111
vanity top				
FT2-2519	442	442	442	442
FT2-3119	541	541	541	541
FT2-3719	578	578	578	578
FT2-4319	623	623	623	623

- Drawers cut for plumbing

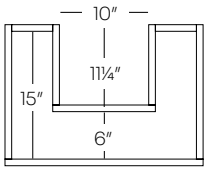

Inside drawer

Double Door and Drawer Floating Vanity

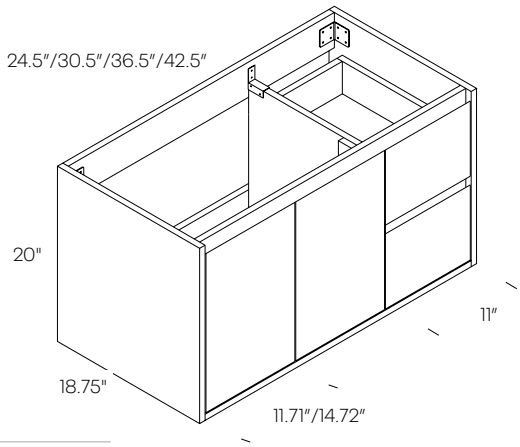

vanity base				
V3618DL-20	1212	1212	944	960
V3618DR-20	1212	1212	944	960
V4218DL-20	1495	1290	994	1011
V4218DR-20	1495	1290	994	1011
vanity top				
FT2-2519	442	442	442	442
FT2-3119	541	541	541	541
FT2-3719	578	578	578	578
FT2-4319	623	623	623	623

NEW PLYWOOD CONSTRUCTION

Double Drawer Floating Vanity

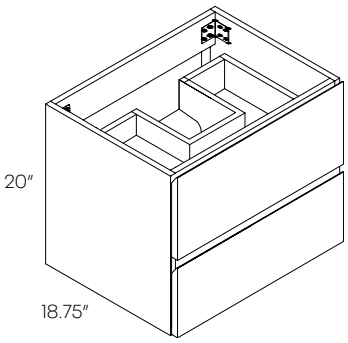

Item Number	E	F
FVDB2418	878	1080
FVDB3018	947	1179
FVDB3618	1027	1294

- Classic box construction
- Interior matches door color
- Metal Drawer Box
- Soft-close glides

Double Door Floating Vanity

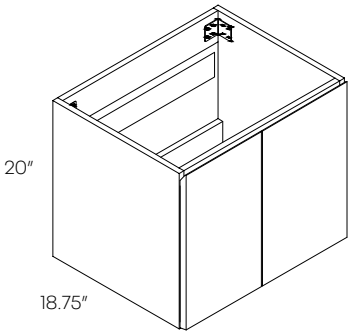

FV2418	404	580
FV3018	448	653
FV3618	491	724

- Classic box construction
- Interior matches door color
- Metal Drawer Box
- Soft-close hinges

Marble & Granite Countertops

Cultured Marble Top

MT

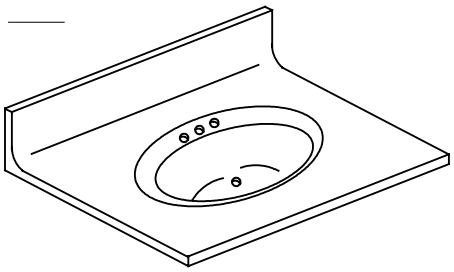

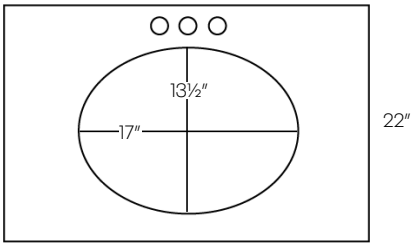

MTS

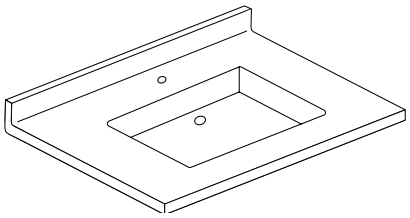

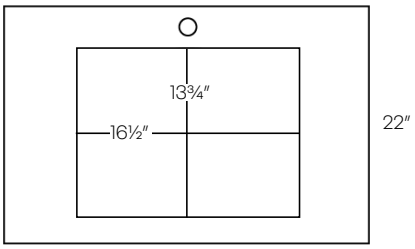

	White
MT2-1917*	147
MT2-2122	221
MT2-2519*	192
MT2-3119*	245
MT2-2522*	279
MT2-2822*	289
MT2-3122*	299
MT2-3422*	341
MT2-3722*	383
MT2-4322*	472
MT2-4922*	512
MTS2-2522	343
MTS2-2822	382
MTS2-3122	420
MTS2-3422	446
MTS2-3722	472
MTS2-4322	535
MTS2-4922	630
MTS2-6122	930
MTS2-6122-DB	1013

***Sold only in the Northeast**
• Single bowl

• Side Spalsh not available
* Center bowl - 4″ spread

Granite Top

Includes:
- White porcelain undermount bowl (installed)
- Loose 4″ backsplash

* Center bowl - 4″ spread
** Center bowl - 8″ spread
*** Double bowl - 8″ spread

	Burlywood (GBW)	Tiger Skin (GTS)	Wheat (GWT)	Cara White (GCW)	Cara White (GCWS)	Gazian White (GGW)
2522-S4*	491	499	524	748	899	676
3122-S4*	551	567	598	880	1058	743
3722-S8**	603	632	662	997	1195	808
4322-S8**	653	700	735	1106	1327	877
4922-S8**	739	781	821	1265	1518	947
6122-S8**	843	911	956	1491	1789	1196
6122-D8***	1011	1073	1129	1663	1994	1426
SDSP-22 (side splash)	47	47	47	89	89	72
6X6-SP (sample)	13	13	13	13	13	13

***Sold only in the Northeast**
- GCWS is square
- CGT6122-S8 will not fit on the Vanguard Vainty Collection

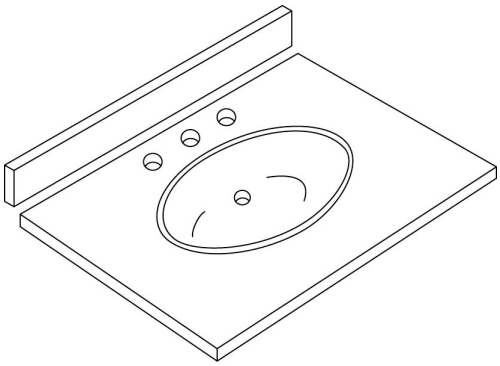

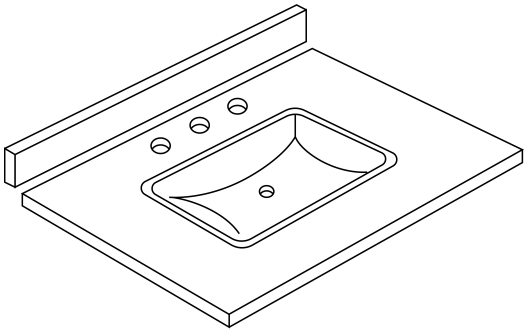

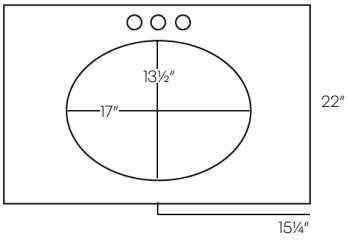

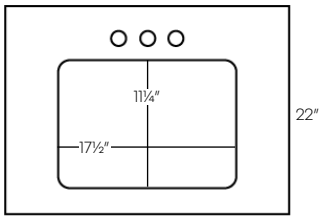

- 20% upcharge
- Only Available in CW and GGW

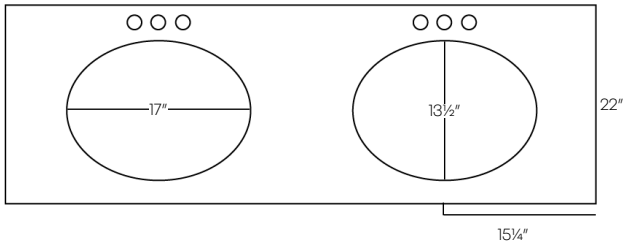

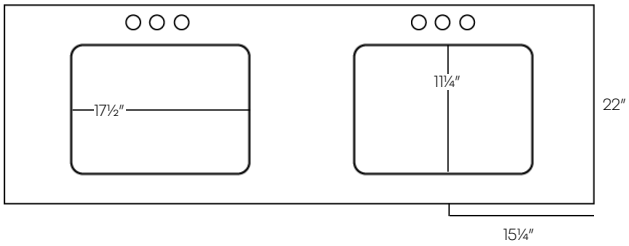

Rev-A-Shelf Accessories

Item	SKU	Cabinet	Collection	List Price	List Price W/ Install
WASTE BASKET ACCESSORIES					
Single 35 qt. w/ 18" chrome slides	RV-12KD-17C S	B15	All	320	400
Single 35 qt. w/ 18" chrome slides	RV-12KD-18C S	B15	All	462	542
Door Mount Kit	RV DM KIT	N/A	All	114	N/A
Maple Bottom Mount Waste Container Single 35 qt.	4WCSC-1535DM-1	B15	All	1392	1472
Maple Bottom Mount Waste Container Double 35 qt.	4WCSC-1835DM-2	B18	All	1500	1580
Maple Bottom Mount Waste Container Double 35 qt.	4WCSC-2135DM-2	B21	All	1591	1671
Maple Bottom Mount Waste Container Double 50 qt.	4WCSC-2150DM-2	B21-FH	All	1658	1738
Steel Bottom Mount Waste Container Single 35 qt.	53WC-1535SCDM-117	B15	All	734	814
Steel Bottom Mount Waste Container Double 35 qt.	53WC-1835SCDM-217	B18	All	780	860
Steel Bottom Mount Waste Container Double 50 qt.	53WC-2150SCDM-217	B18-FH	All	793	873
CORNER ACCESSORIES					
Maple Single Blind Corner Organizer	5371-15-MP-R	BLB45/48	Luxor, Concord	1063	1063
Maple Single Blind Corner Organizer	5371-15-MP-L	BLB45/48	Luxor, Concord	1063	1063
Maple Double Blind Corner Organizer	5372-15-MP-R	BLB45/48	Luxor, Concord	2,409	2,409
Maple Double Blind Corner Organizer	5372-15-MP-L	BLB45/48	Luxor, Concord	2,409	2,409
Gray Single Blind Corner Organizer	5371-15-GR-R	BLB45/48	Luxor, Concord	1063	1063
Gray Single Blind Corner Organizer	5371-15-GR-L	BLB45/48	Luxor, Concord	1063	1063
Gray Double Blind Corner Organizer	5372-15-GR-R	BLB45/48	Luxor, Concord	2,409	2,409
Gray Double Blind Corner Organizer	5372-15-GR-L	BLB45/48	Luxor, Concord	2,409	2,409
Fog Single Blind Corner Organizer	5371-15-FOG-R	BLB45/48	Luxor, Concord	1080	1200
Fog Single Blind Corner Organizer	5371-15-FOG-L	BLB45/48	Luxor, Concord	1080	1200
Fog Double Blind Corner Organizer	5372-15-FOG-R	BLB45/48	Luxor, Concord	2,407	2,527
Fog Double Blind Corner Organizer	5372-15-FOG-L	BLB45/48	Luxor, Concord	2,407	2,527
Wood Half Moon Double Shelf with Pivot and Slide	4WLS882-32-570	BLB42/45	All	1336	1456
Wood Half Moon Double Shelf with Pivot and Slide	4WLS882-35-570	BLB45/48	All	1563	1683
BASE ACCESSORIES					
Two-tier cookware Organizer	5CW2-2122SC-CR	B24	All	1292	1372
Tray Divider w/ Clips	597-12CR-52	N/A	All	49	129
Tray Divider w/ Clips	597-18CR-52	N/A	All	62	142
6" Base Filler Organizer	432-BF-6C	N/A	All	1010	1090
6" Base Filler Organizer W/ Soft-close	432-BFSC-6C	N/A	All	1309	1389
Base Organizer	448-BCSC-5C	B9-FH	All	1135	1215
Base Organizer	448-BCSC-8C	B12-FH	All	1236	1316

Item	SKU	Cabinet	Collection	List Price	List Price W/ Install
Base Organizer	448-BCSC-6C	B9-FH	Classic	1228	1308
Base Organizer	448-BCSC-9C	B12-FH	Classic	1458	1538
Base Organizer	448-BDDSC-5C	B9	All	911	991
Base Organizer	448-BDDSC-8C	B12	All	1101	1181
Base Organizer	448-BDDSC-11C	B15	All	1312	1392
Food Storage Container Organizer	4FSCO-18SC-1	B18	All	1567	1656
Food Storage Container Organizer	4FSCO-24SC-1	B24	All	1751	1831
Base Organizer w/ Utensil Bins	448UT-BCSC-5C	B9-FH	All	1287	1367
Base Organizer w/ Utensil Bins	448UT-BCSC-8C	B12-FH	All	1540	1620
Maple Knife Block & Utensil Base Organizer	448KB-BCSC-8C	B12-FH	All	2,067	2,147
Maple Knife Block & Utensil Base Organizer	448KB-BCSC-11C	B15-FH	All	2,549	2,629
Base Cabinet Pullout	5322-BCSC-6-GR	B9-FH	All	1516	1596
Base Cabinet Pullout	5322-BCSC-9-GR	B12-FH	All	1564	1644
Base Cabinet Pullout w/ Knife Block & Utensil Bin	5322KB-BCSC-6-GR	B9-FH	All	2,699	2,779
Base Cabinet Pullout w/ Knife Block & Utensil Bin	5322KB-BCSC-9-GR	B12-FH	All	2,868	2,948
Base Cabinet Pullout w/ Utensil Bin	5322UT-BCSC-6-GR	B9-FH	All	1850	1930
Heavy Duty Mixer Lift	ML-MPHDSCCR-18	B18-FH	All	1627	1707
TALL ACCESSORIES					
Wire Pantry Pullout	448-TP43-11-1	UC15	All	3,113	3,193
Wire Pantry Pullout	448-TP43-14-1	UC18	All	3,371	3,451
Solid Bottom Pantry Pullout	5343-13-GR	UC15	Classic	4,225	4,305
Solid Bottom Pantry Pullout	5343-16-GR	UC18	Classic	4,509	4,589
VANITY ACCESSORIES					
L-Shaped Vanity Organizer	441-12VSBSC-1	V24	All	1196	1276
L-Shaped Vanity Organizer	441-15VSBSC-1	V30	All	1449	1529
Vanity Appliance Storage Rack	4HD-15-1	V30+	All	364	444
Sink Base Waste Pullout	5SBWC-815S-1	V24+	All	524	604
Door Mount Vanity Waste Container	4SOWC	V30	All	281	361
Bottom Mount Waste Container	4WCSC-128-19-1	V24+	All	915	995
Bottom Mount Hamper	4WH-RM-15DM-1	VB18	All	1487	1567
Polymer Bottom Mount Hamper	HPRV-1520 S	VB18	All	486	566

Item	SKU	Cabinet	Collection	List Price	List Price W/ Install
DRAWER ACCESSORIES					
Drawer Peg System w/ 9 Pegs	4DPS-2421	N/A	All	408	488
Drawer Peg System w/ 12 Pegs	4DPS-3021	N/A	All	491	571
Drawer Peg System w/ 16 Pegs	4DPS-3921	N/A	All	626	706
Wood Cutlery Tray Insert	4WCT-1	N/A	All	281	361
Wood Cutlery Tray Insert	4WCT-3	N/A	All	374	454
Tiered Cutlery Drawer	4WTCD-18SC-1	B18	All	941	1021
Tiered Cutlery Drawer	4WTCD-21SC-1	B21	All	947	1027
Tiered Cutlery Drawer	4WTCD-24SC-1	B24	All	1016	1.096
Charging Station	4WCDB-18SC-1	B18	All	1790	1870
Charging Station	4WCDB-18FLSC-1	B18	Classic	1778	1858
Wood Spice Drawer Inserts	4SDI-18	N/A	All	298	378
Wood Spice Drawer Inserts	4SDI-24	N/A	All	403	483
Wood Spice Drawer Inserts	4SDI-36-1	N/A	All	591	671
Knife Block Insert	4WKB-1	N/A	All	421	501
Wood Utensil Block Insert	4WUT-1	N/A	All	295	375
Wood Utensil Block Insert	4WUT-3	N/A	All	376	456
Utensil Drawer Insert	4WUT-36-1	N/A	All	651	731
Knife Block/Utensil Drawer Insert	4WUTKB-36-1	N/A	All	845	925
Utensil/Cutlery Drawer Insert	4WUTCT-36-1	N/A	All	670	750
SINK ACCESSORIES					
U-Shaped Solid Bottom Shelves	5386-30BCSC-GR	SB33	All	1708	1788
U-Shaped Solid Bottom Shelves	5386-33BCSC-GR	SB36	All	1795	1875
Towel Holder Pullout	563-51-C	N/A	All	110	190
Drip Tray	SBDT-2730-S-1	SB27-30	All	187	187
Drip Tray	SBDT-3336-S-1	SB33-36	All	208	208
Drip Tray	SBDT-3942-S-1	SB39-42	All	229	229
SInk Base Waste Pullout	5SBWC-815S-1	SB24	All	524	604
Cleaning Caddy Pullout	5CC-915S-11-1	SB30	All	508	588
Sink Front Tip-Out tray	LD-6591-22-11-1	N/A	All	65	145
Sink Front Tip-Out tray	LD-6572-11-11-1	N/A	All	83	163
Sink Front Tip-Out tray	LD-6572-14-11-1	N/A	All	87	167
Sink Base Door Storage	4SBSU-15	SB30	All	298	378
Sink Base Door Storage	4SBSU-18	SB36	All	316	396

Item	SKU	Cabinet	Collection	List Price	List Price W/ Install
Sink Base Door Storage	4SBSU-21	SB42	All	355	435
WALL ACCESSORIES					
Door Mount Spice Rack	4SR-15	W15	All	254	334
Door Mount Spice Rack	4SR-18	W18	All	287	367
Door Mount Spice Rack	4SR-21	W21	All	320	400
Tiered Wall Filler	432-WFBBSC30-6C	F630	All	723	803
Tiered Wall Filler	432-WFBBSC36-6C	F642	All	942	1022
Tiered Wall Filler	432-WFBBSC42-6C	F642	All	1012	1092
LAZY SUSAN ACCESSORIES					
Single Shelf w/ 7" Steel Bearing	LD-4BW-001-18SB-1	CW24	All	364	444
Single Shelf w/ 7" Steel Bearing	LD-4BW-001-20SB-1	CW27	All	373	453
Maple Shelf Set (2)	LD-4BW-062-18-1	CW24	All	696	776
Maple Shelf Set (2)	LD-4BW-062-20-1	CW27	All	703	783
Maple Shelf Set (3)	LD-4BW-063-1836-1	CW24	All	1012	1092
Maple Shelf Set (3)	LD-4BW-063-2036-1	CW27	All	1020	1100
Polymer Shelf Set (2)	3072-18-11-52	N/A	All	236	316
Polymer Shelf Set (3)	3073-18-11-531	N/A	All	367	447
Polymer Shelf Set (3)	3073-18-11-536	N/A	All	376	456

Cabinet Care Information

Finish Awareness Statement

Thank you for choosing a stained finish product from CNC Cabinetry. When purchasing cabinetry, we would like to ensure our customers are properly educated on the characteristics of the wood used and the finished wood they are purchasing. Please review the following "Finish Awareness Statement". All of CNC's finishes are applied in the same manner and with the same quality standards. There are some unique characteristics with stained finishes across all wood species, and it is important to understand that these characteristics are not considered quality defects.

1. Wood in its natural state expands and contracts. Because of this natural movement, you may find evidence of slight cracks in joint lines on doors and face frames. Center panels will shrink exposing minor unfinished areas of wood. These slight cracks are normal and not considered quality defects. Proper humidification should be maintained during storage and after installation.

2. Every tree grows differently giving each piece of wood its own unique characteristics. By the very nature of wood, grain patterns and other wood characteristics including mineral streaks, knots, and other variations are considered normal. Because of this, stain will appear differently across the same cabinet. This is the natural beauty of the wood.

3. End grains on door edges and panel profiles may exhibit open grain or voids in wood appearing as "Rough Spots" in the wood. Stains often highlight indentions into the wood. These imperfections are normal and are not considered quality defects.

4. Light-colored wood may heighten light-and-dark effects, and cause blotchiness when medium or dark stains are applied. These are natural occurrences and are within CNC's strict standards of wood-finishing.

These imperfections are normal and will not be considered as reasons for replacement.
We, the manufacturer, nor your authorized dealer will replace products or issue credit based on any of the above reasons.

Treat your Cabinets with Care:

- Use a soft cotton cloth.
- Do not use abrasive materials (including paper towels).
- Only use soap and warm water.
- Do not spray directly onto the cabinets.
- Do not use any chemicals.
  (Note, when using a spray for other items placed near your cabinetry, be careful not to overspray on your cabinets)
- Wipe spills promptly and do not leave wet items against the wood.
- Clean glass doors with a glass cleaner.
  (Be careful not to overspray on the wood)
- You can repair small nicks and scratches with our touch up kits.
- Waxing and polishing is not recommended as this can create a film or wax build up on your cabinets and affect the finish.
- You can dust your cabinets with a lightly damp cloth.
  (Follow the grain of the wood wiping across can cause scratches)

Humidification effects on door with a Miter Joint

High Humidity

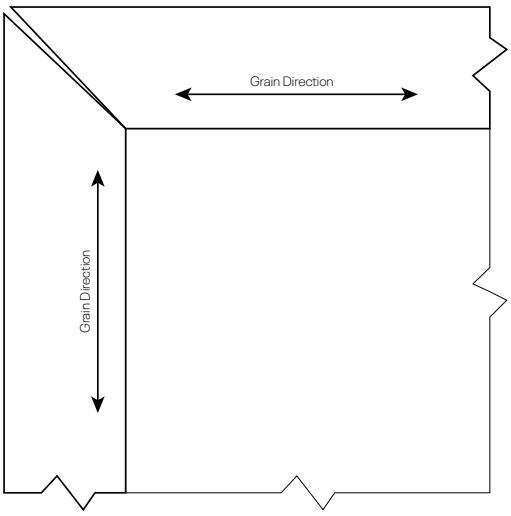

When wood swells, miter joints open as shown above

Low Humidity

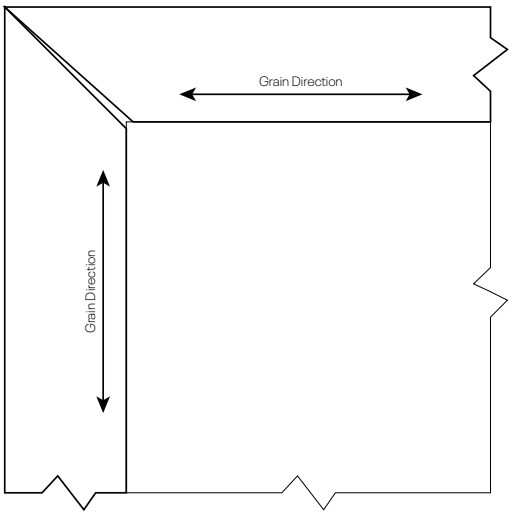

When wood shrinks, miter joints open as shown above

* Humidification is normal and is not considered a need for replacement.

Limited Lifetime Warranty:

CNC Cabinetry Inc. ("CNC") provides the following limited lifetime warranty to the original Residential Purchaser of all cabinetry and vanities manufactured by CNC. This Limited Lifetime Warranty ("Warranty") is only applicable to cabinets and vanities sold to the original Residential purchaser (as defined below) and used in the applications described below within the United States. Except as allowed by applicable law, you may not assign or transfer this Warranty.

Under this Warranty, an original Residential purchaser is defined as an individual who purchases and installs the cabinets and vanities in a dwelling that is owned and used by that person as a primary or secondary home. A primary or secondary home does not include rental property. This Warranty does not apply to landlords, leasing companies or other commercial purchasers. Original residential purchaser shall include any business or person such as a builder, contractor or developer that purchases and install CNC cabinets and vanities in a newly constructed or renovated dwelling that will be used by the initial owner/purchaser of that dwelling as a primary or secondary home.

Subject to the limitations and exclusions set forth, CNC warrants to the original Residential purchaser that the cabinets and vanities will be free from defects in material and workmanship, Damage that occurs during normal wear and tear, or damage due to exposure to moisture or extreme temperatures are not covered under the warranty.

The Warranty period for the cabinets and vanities begin on the date the cabinet and vanity were purchased, whether purchased by you or by a third party on your behalf. Your warranty is only valid if you used the dwelling as your primary or secondary home and does not extend to future owners if the property is sold.

This Warranty does not apply to cabinets or vanities: 1. Installed outdoors; 2. misused, abused, or unauthorized alterations; 3. Improperly stored or placed in humid environment or subjected to improper temperatures; 4. Damaged due to flood, fire or other natural disasters; 5. Exhibiting normal wear and tear; 6. Which have been improperly installed, maintained or cleaned.

In the event of a defect in the workmanship or materials occurring during the warranty period, CNC will at its option, repair or replace any defective cabinet or vanity or component provided, if it is commercially feasible. If it is not commercially feasible, CNC reserves the right to provide a credit towards a similar type of product sold by CNC. This is your sole and exclusive remedy for any defects.

This Warranty is limited to the replacement of defective parts only and does not include service, labor or transportation charges related to the removal or installation of the defective or replacement parts. This Warranty does not apply to any products used in conjunction with the cabinetry, or vanity, such as countertops, appliances, plumbing fixtures, decorative hardware, lighting. Repair or replacement remedies offered under this Warranty are subject to the current product offerings of styles and construction of CNC at that time. If a warranty claim is filed after a product has been discontinued or obsolete, CNC reserves the right at its sole option, to replace that part with one of the same or similar style based on availability and cannot guarantee an exact match.

The remedies described above are the sole and exclusive remedies and CNC's entire liability for any breach of this Warranty. Total liability shall under no circumstances exceed the actual amount paid for the defective cabinet or vanity. CNC shall not be responsible for any consequential, incidental, special or punitive damages. This Warranty gives you specific legal rights and you may also have other rights which vary from state to state.

For replacements under CNC's limited lifetime warranty, contact your authorized CNC dealer who will arrange for inspection of the cabinet. A dated sales receipt as proof of purchase is required to obtain benefits from this warranty, if you have difficulty reaching your dealer, you may reach out to CNC Cabinetry directly.

Member NKBA

www.cnccabinetry.com

Headquarters

101 Kentile Rd
South Plainfield, NJ 07080

South East

4501 Homerun Blvd. # 300
Davenport, FL 33837

Mid Atlantic

2000 Nazareth Church Rd
Spartanburg, SC 29301

West Coast

2770 North Lamb Blvd
Las Vegas, NV 89115

South West

2300 East Bardin Rd
Arlington, TX 76018

cnc cabinetry®